This is a digital copy of a book that was preserved for generations on library shelves before it was carefully scanned by Google as part of a project to make the world's books discoverable online.

It has survived long enough for the copyright to expire and the book to enter the public domain. A public domain book is one that was never subject to copyright or whose legal copyright term has expired. Whether a book is in the public domain may vary country to country. Public domain books are our gateways to the past, representing a wealth of history, culture and knowledge that's often difficult to discover.

Marks, notations and other marginalia present in the original volume will appear in this file - a reminder of this book's long journey from the publisher to a library and finally to you.

Usage guidelines

Google is proud to partner with libraries to digitize public domain materials and make them widely accessible. Public domain books belong to the public and we are merely their custodians. Nevertheless, this work is expensive, so in order to keep providing this resource, we have taken steps to prevent abuse by commercial parties, including placing technical restrictions on automated querying.

We also ask that you:

+ *Make non-commercial use of the files* We designed Google Book Search for use by individuals, and we request that you use these files for personal, non-commercial purposes.
+ *Refrain from automated querying* Do not send automated queries of any sort to Google's system: If you are conducting research on machine translation, optical character recognition or other areas where access to a large amount of text is helpful, please contact us. We encourage the use of public domain materials for these purposes and may be able to help.
+ *Maintain attribution* The Google "watermark" you see on each file is essential for informing people about this project and helping them find additional materials through Google Book Search. Please do not remove it.
+ *Keep it legal* Whatever your use, remember that you are responsible for ensuring that what you are doing is legal. Do not assume that just because we believe a book is in the public domain for users in the United States, that the work is also in the public domain for users in other countries. Whether a book is still in copyright varies from country to country, and we can't offer guidance on whether any specific use of any specific book is allowed. Please do not assume that a book's appearance in Google Book Search means it can be used in any manner anywhere in the world. Copyright infringement liability can be quite severe.

About Google Book Search

Google's mission is to organize the world's information and to make it universally accessible and useful. Google Book Search helps readers discover the world's books while helping authors and publishers reach new audiences. You can search through the full text of this book on the web at `http://books.google.com/`

Digitized by Google

VE RI TAS

HARVARD LAW SCHOOL
LIBRARY

Digitized by Google

Digitized by Google

Digitized by Google

85

Jurnal

UNITED STATES CIRCUIT COURTS OF APPEALS REPORTS

WITH ANNOTATIONS

WITH TABLE OF CASES IN THE UNITED STATES CIRCUIT COURTS OF APPEALS WHICH HAVE BEEN PASSED UPON BY THE SUPREME COURT OF THE UNITED STATES.

113-154 F.

VOLUME 83

LAWYERS' CO-OPERATIVE PUBLISHING CO.
ROCHESTER
1908

Digitized by Google

COPYRIGHT, 1908,
BY
LAWYERS' CO-OPERATIVE PUBLISHING CO.

MAR 5 1908

83 C.C.A.

Digitized by Google

JUDGES

OF THE

UNITED STATES CIRCUIT COURTS OF APPEALS AND THE CIRCUIT AND DISTRICT COURTS.

FIRST CIRCUIT.

Hon. OLIVER WENDELL HOLMES, Circuit Justice.....Washington, D. C.
Hon. LE BARON B. COLT, Circuit Judge.....Providence, R. I.
Hon. WILLIAM L. PUTNAM, Circuit Judge.....Portland, Me.
Hon. FRANCIS C. LOWELL, Circuit Judge.....Boston, Mass.
Hon. CLARENCE HALE, District Judge, Maine.....Portland, Me.
Hon. FREDERIC DODGE, District Judge, Massachusetts.....Boston, Mass.
Hon. EDGAR ALDRICH, District Judge, New Hampshire.....Littleton, N. H.
Hon. ARTHUR L. BROWN, District Judge, Rhode Island.....Providence, R. I.

SECOND CIRCUIT.

Hon. RUFUS W. PECKHAM, Circuit Justice.....Washington, D. C.
Hon. E. HENRY LACOMBE, Circuit Judge.....New York, N. Y.
Hon. ALFRED C. COXE, Circuit Judge.....Utica, N. Y.
Hon. HENRY G. WARD, Circuit Judge.....New York, N. Y.
Hon. WALTER C. NOYES, Circuit Judge [1].....New London, Conn.
Hon. JAMES P. PLATT, District Judge, Connecticut.....Hartford, Conn.
Hon. THOMAS I. CHATFIELD, District Judge, E. D. New York.....Brooklyn, N. Y.
Hon. GEORGE W. RAY, District Judge, N. D. New York.....Norwich, N. Y
Hon. GEORGE B. ADAMS, District Judge, S. D. New York.....New York, N. Y.
Hon. GEORGE C. HOLT, District Judge, S. D. New York.....New York, N. Y.
Hon. CHARLES M. HOUGH, District Judge, S. D. New York.....New York, N. Y.
Hon. JOHN R. HAZEL, District Judge, W. D. New York.....Buffalo, N. Y.
Hon. JAMES L. MARTIN, District Judge, Vermont.....Brattleboro, Vt.

THIRD CIRCUIT.

Hon. WILLIAM H. MOODY, Circuit Justice.....Washington, D. C.
Hon. GEORGE M. DALLAS, Circuit Judge.....Philadelphia, Pa.
Hon. GEORGE GRAY, Circuit Judge.....Wilmington, Del.
Hon. JOSEPH BUFFINGTON, Circuit Judge.....Pittsburgh, Pa.
Hon. EDWARD G. BRADFORD, District Judge, Delaware.....Wilmington, Del.
Hon. WILLIAM M. LANNING, District Judge, New Jersey.....Trenton, N. J.
Hon. JOSEPH CROSS, District Judge, New Jersey.....Elizabeth, N. J.

[1] Appointed September 18, 1907.

Digitized by Google

Hon. JOHN B. McPHERSON, District Judge, E. D. Pennsylvania.....Philadelphia, Pa.
Hon. JAMES B. HOLLAND, District Judge, E. D. Pennsylvania.....Philadelphia, Pa.
Hon. ROBERT WODROW ARCHBALD, District Judge, M. D. Pennsylvania..Scranton, Pa.
Hon. NATHANIEL EWING, District Judge, W. D. Pennsylvania.....Pittsburgh, Pa.

FOURTH CIRCUIT.

Hon. MELVILLE W. FULLER, Circuit Justice.....Washington, D. C.
Hon. NATHAN GOFF, Circuit Judge.....Clarksburg, W. Va.
Hon. JETER C. PRITCHARD, Circuit Judge.....Asheville, N. C.
Hon. THOMAS J. MORRIS, District Judge, Maryland.....Baltimore, Md.
Hon. THOMAS R. PURNELL, District Judge, E. D. North Carolina.....Raleigh, N. C.
Hon. JAMES E. BOYD, District Judge, W. D. North Carolina.....Greensboro, N. C.
Hon. WILLIAM H. BRAWLEY, District Judge, E. and W. D. South Car..Charleston, S. C.
Hon. EDMUND WADDILL, Jr., District Judge, E. D. Virginia.....Richmond, Va.
Hon. HENRY CLAY McDOWELL, District Judge, W. D. Virginia.....Lynchburg, Va.
Hon. ALSTON G. DAYTON, District Judge, N. D. West Virginia.....Philippi, W. Va.
Hon. BENJAMIN F. KELLER, District Judge, S. D. West Virginia.....Bramwell, W. Va.

FIFTH CIRCUIT.

Hon. EDWARD D. WHITE, Circuit Justice.....Washington, D. C.
Hon. DON A. PARDEE, Circuit Judge.....Atlanta, Ga.
Hon. A. P. McCORMICK, Circuit Judge.....Dallas, Tex.
Hon. DAVID D. SHELBY, Circuit Judge.....Huntsville, Ala.
Hon. THOMAS G. JONES, District Judge, N. and M. D. Alabama.....Montgomery, Ala.
Hon. OSCAR R. HUNDLEY, District Judge, N. D. Alabama.....Birmingham, Ala.
Hon. HARRY T. TOULMIN, District Judge, S. D. Alabama.....Mobile, Ala.
Hon. CHARLES SWAYNE, District Judge, N. D. Florida [2].....Pensacola, Fla.
Hon. WM. B. SHEPPARD, District Judge, N. D. Florida [3].....Pensacola, Fla.
Hon. JAMES W. LOCKE, District Judge, S. D. Florida.....Jacksonville, Fla.
Hon. WILLIAM T. NEWMAN, District Judge, N. D. Georgia.....Atlanta, Ga.
Hon. EMORY SPEER, District Judge, S. D. Georgia.....Macon, Ga.
Hon. EUGENE D. SAUNDERS, District Judge, E. D. Louisiana.....New Orleans, La.
Hon. ALECK BOARMAN, District Judge, W. D. Louisiana.....Shreveport, La.
Hon. HENRY C. NILES, District Judge, N. and S. D. Mississippi.....Kosciusko, Miss.
Hon. DAVID E. BRYANT, District Judge, E. D. Texas.....Sherman, Tex.
Hon. EDWARD R. MEEK, District Judge, N. D. Texas.....Dallas, Tex.
Hon. WALLER T. BURNS, District Judge, S. D. Texas.....Houston, Tex.
Hon. THOMAS S. MAXEY, District Judge, W. D. Texas.....Austin, Tex.

SIXTH CIRCUIT.

Hon. JOHN M. HARLAN, Circuit Justice.....Washington, D. C.
Hon. HORACE H. LURTON, Circuit Judge.....Nashville, Tenn.
Hon. HENRY F. SEVERENS, Circuit Judge.....Kalamazoo, Mich.
Hon. JOHN K. RICHARDS, Circuit Judge.....Cincinnati, Ohio.
Hon. ANDREW M. J. COCHRAN, District Judge, E. D. Kentucky.....Maysville, Ky.
Hon. WALTER EVANS, District Judge, W. D. Kentucky.....Louisville, Ky.
Hon. HENRY H. SWAN, District Judge, E. D. Michigan.....Detroit, Mich.
Hon. LOYAL E. KNAPPEN, District Judge, W. D. Michigan.....Grand Rapids, Mich.
Hon. ROBERT W. TAYLER, District Judge, N. D. Ohio.....Cleveland, Ohio.
Hon. ALBERT C. THOMPSON, District Judge, S. D. Ohio.....Cincinnati, Ohio.
Hon. JOHN E. SATER, District Judge, S. D. Ohio.....Columbus, Ohio.
Hon. CHARLES D. CLARK, District Judge, E. and M. D. Tennessee....Chattanooga, Tenn.
Hon. JOHN E. McCALL, District Judge, W. D. Tennessee.....Memphis, Tenn.

[2] Died July 5, 1907.

[3] Appointed September 4, 1907.

Digitized by Google

SEVENTH CIRCUIT.

Hon. WILLIAM R. DAY, Circuit Justice.....Washington, D. C.
Hon. PETER S. GROSSCUP, Circuit Judge.....Chicago, Ill.
Hon. FRANCIS E. BAKER, Circuit Judge.....Indianapolis, Ind.
Hon. WILLIAM H. SEAMAN, Circuit Judge.....Sheboygan, Wis.
Hon. CHRISTIAN C. KOHLSAAT, Circuit Judge.....Chicago, Ill.
Hon. KENESAW M. LANDIS, District Judge, N. D. Illinois.....Chicago, Ill.
Hon. SOLOMON H. BETHEA, District Judge, N. D. Illinois.....Chicago, Ill.
Hon. FRANCIS M. WRIGHT, District Judge, E. D. Illinois.....Urbana, Ill.
Hon. J. OTIS HUMPHREY, District Judge, S. D. Illinois.....Springfield, Ill.
Hon. ALBERT B. ANDERSON, District Judge, Indiana.....Indianapolis, Ind.
Hon. JOSEPH V. QUARLES, District Judge, E. D. Wisconsin.....Milwaukee, Wis.
Hon. ARTHUR L. SANBORN, District Judge, W. D. Wisconsin.....Madison, Wis.

EIGHTH CIRCUIT.

Hon. DAVID J. BREWER, Circuit Justice.....Washington, D. C.
Hon. WALTER H. SANBORN, Circuit Judge.....St. Paul, Minn.
Hon. WILLIS VAN DEVANTER, Circuit Judge.....Cheyenne, Wyo.
Hon. WILLIAM C. HOOK, Circuit Judge.....t.....Leavenworth, Kan.
Hon. ELMER B. ADAMS, Circuit Judge.....St. Louis, Mo.
Hon. JACOB TRIEBER, District Judge, E. D. Arkansas.....Little Rock, Ark.
Hon. JOHN H. ROGERS, District Judge, W. D. Arkansas.....Ft. Smith, Ark.
Hon. ROBERT E. LEWIS, District Judge, Colorado. .....Denver, Colo.
Hon. HENRY THOMAS REED, District Judge, N. D. Iowa.....Cresco, Iowa.
Hon. SMITH McPHERSON, District Judge, S. D. Iowa.....Red Oak, Iowa
Hon. JOHN C. POLLOCK, District Judge, Kansas.....Topeka, Kan.
Hon. WM. LOCHREN, District Judge, Minnesota.....Minneapolis, Minn.
Hon. PAGE MORRIS, District Judge, Minnesota.....Duluth, Minn.
Hon. DAVID P. DYER, District Judge, E. D. Missouri.....St. Louis, Mo.
Hon. JOHN F. PHILIPS, District Judge, W. D. Missouri.....Kansas City, Mo.
Hon. W. H. MUNGER, District Judge, Nebraska.....Omaha, Neb.
Hon. THOMAS C. MUNGER, District Judge, Nebraska.....Lincoln, Neb.
Hon. CHARLES F. AMIDON, District Judge, North Dakota.....Fargo, N. D.
Hon. JOHN E. CARLAND, District Judge, South Dakota.....Sioux Falls, S. D.
Hon. JOHN A. MARSHALL, District Judge, Utah.....Salt Lake City, Utah.
Hon. JOHN A. RINER, District Judge, Wyoming.....Cheyenne, Wyo.

NINTH CIRCUIT.

Hon. JOSEPH McKENNA, Circuit Justice.....Washington, D. C.
Hon. WILLIAM B. GILBERT, Circuit Judge.....Portland, Or.
Hon. WM. W. MORROW, Circuit Judge.....San Francisco, Cal.
Hon. ERSKINE M. ROSS, Circuit Judge.....Los Angeles, Cal.
Hon. WM. C. VAN FLEET, District Judge, N. D. California.....San Francisco, Cal.
Hon. JOHN J. DE HAVEN, District Judge, N. D. California.....San Francisco, Cal.
Hon. OLIN WELLBORN, District Judge, S. D. California.....Los Angeles, Cal.
Hon. FRANK S. DEITRICH, District Judge, Idaho.....Boise, Idaho.
Hon. WILLIAM H. HUNT, District Judge, Montana.....Helena, Mont.
Hon. EDWARD S. FARRINGTON, District Judge, Nevada.....Carson City, Nev.
Hon. CHARLES E. WOLVERTON, District Judge, Oregon.....Portland, Or.
Hon. EDWARD WHITSON, District Judge, E. D. Washington.....Spokane, Wash.
Hon. CORNELIUS H. HANFORD, District Judge, W. D. Washington.....Seattle, Wash.

Digitized by Google

Digitized by Google

CASES REPORTED.

Page

Ætna Indemnity Co. v. J. R. Crowe Coal & Mining Co..... 431
Alder, Yale & Towne Mfg. Co. v.. 149
Alfred S. Campbell Art Co., Bong v. 576
Allman, City of Grand Forks v... 554
American Grass Twine Co., Meighan v..... 124
American Smelting & Refining Co., Patek v..... 284
Anna M. Fahy, The..... 48
Arkansas Southeastern R. Co. v. Union Sawmill Co..... 224
Asher J. Hudson, The..... 143

Baars & Co. v. Mitchell..... 466
Baltimore & O. R. Co., McCune v. 175
Bavier, The W. N..... 12
Baxter & Co., In re..... 106
Beard, Moorman v..... 265
Beaver Knitting Mills, In re..... 240
Benker v. Meyer..... 270
Benneche & Bro. v. United States 43
Bergen, The Clara E..... 15
Blakely v. Fidelity Mut. Life Ins. Co. 155
Bong v. Alfred S. Campbell Art Co. 576
Booth v. United States..... 552
Boswell, The..... 572
Botts v. United States..... 646
Bowers Hydraulic Dredging Co. v. Federal Contracting Co..... 52
Bradley, Palmer v..... 231
Brandon, Consani v..... 304
Brock & Rankin, Wilson v..... 121
Brookfield v. Elmer Glass Works 180
Bryant, Swofford Bros. Dry Goods Co. v..... 23
Buffalo, The..... 531
Burnette, Morrison v..... 391
Burr, Hull v..... 61
Bush v. Pioneer Min. Co..... 320

Page

Calculagraph Co., Wilson v..... 77
Caldy, The..... 19
Callaghan, Westinghouse, Church, Kerr & Co. v..... 669
Camden v. Jarrett..... 492
Campbell Art Co., Bong v..... 576
Carpenter, Springs & Co. v..... 327
Carroll v. United States..... 245
Case Threshing Mach. Co., Indiana Mfg. Co. v..... 343
Castner Electrolytic Alkali Co. v. Davies 510
Charles E. Matthews, The..... 33
Charles E. Matthews, The..... 153
Chicago Consolidated Traction Co., West Chicago R. Co. v.... 679
Chicago, M. & St. P. R. Co. v. Heil 400
Chicago, M. & St. P. R. Co. v. Newsome 422
Cincinnati, N. O. & T. P. R. Co., Gwyn v..... 648
City of Grand Forks v. Allman.. 554
City of Pittsburgh v. Jonathan Clark & Sons Co..... 262
Clara E. Bergen, The..... 15
Collin County Nat. Bank of McKinney, Tex., v. Hughes..... 661
Columbian Mfg. Co., McNaboe v. 81
Consani v. Brandon..... 304
Corbin v. Holmes..... 367
Craft v. Schafer..... 677
Crawford, Ex parte..... 474
Crouse-Hinds Electric Co., Fielding v..... 331
Crowe Coal & Mining Co., Ætna Indemnity Co. v..... 431
Crucible Steel Co., United States v. 679
Curtin, Ex parte..... 495
Curtin, Hatch v..... 495
Cuzco, The..... 181

Dalton v. United States..... 317

Digitized by Google

Page

David Moffat Co., Globe & Rutgers Fire Ins. Co. of New York v. 91
Davies, Castner Electrolytic Alkali Co. v..... 510
Davis & Roesch Temperature Controlling Co. v. Roesch..... 261
Delaware & H. R. Co. v. Wilkins 27
Derham v. Donohue..... 657
Donohue, Derham v..... 657
Doran, In re..... 265
Drake, Wineman v..... 505
Dumois, The Georg..... 15

Edward Benneche & Bro. v. United States..... 43
Elmer Glass Works, Brookfield v. 180
Elwell, The James W..... 572
E. M. Newton & Co., In re..... 23
Ennis v. United States..... 478
Erie R. Co. v. Kane..... 564
Eriksson v. Goodwin..... 129
Erlanger, Blumgart & Co. v. United States..... 463
Eugene F. Moran, The..... 153

Fahy, The Anna M..... 48
Fawcett v. United States..... 197
Federal Contracting Co., Bowers Hydraulic Dredging Co. v..... 52
Federal Gold & Copper Co., Maxwell v..... 570
Fidelity Mut. Life Ins. Co., Blakely v..... 155
Fidelity & Casualty Co. of New York v. Thompson..... 324
Fidelity & Deposit Co. of Maryland, United States ex rel. Schauffler v..... 577
Fielding v. Crouse-Hinds Electric Co. 331
15 D. and 18 D, The..... 153
Fisher, Louisville & N. R. Co. v. . 584
Flickenger Wheel Co. v. Wagner.. 677
Fowler, Kenyon v..... 567
Free Gold Min. Co., Golden Cross Min. & Mill Co. v..... 355
Freygang v. Vera Cruz & P. R. Co. 414
Fri, The..... 205
Fries-Breslin Co. v. Star Fire Ins. Co. 147
Furnessia, The..... 126

Gardner, Hampton Stave Co. v... 521

Page

Gates, Marks v..... 321
Georg Dumois, The..... 15
George, Peters v..... 408
G. Gulbenkian & Co. v. United States 40
Gibbs, Perkins v..... 68
Gladiator, The..... 332
Globe & Rutgers Fire Ins. Co. of New York v. David Moffat Co. 91
Golden Cross Min. & Mill Co. v. Free Gold Min. Co..... 355
Goodwin, Eriksson v..... 129
Gourdain v. United States..... 309
Graessler & Reichwald, In re.... 304
Great Lakes Towing Co. v. Mill Transp. Co..... 607
Great Southern Gas & Oil Co. v. Logan Natural Gas & Fuel Co. 574
Gulbenkian & Co. v. United States 40
Gwyn v. Cincinnati, N. O. & T. P. R. Co..... 648

Hammerschlag Mfg. Co. v. Struthers-Wells Co..... 198
Hampton Stave Co. v. Gardner.. 521
Harper, In re..... 565
Hatch v. Curtin..... 495
H. Baars & Co. v. Mitchell..... 466
Heil, Chicago, M. & St. P. R. Co. v..... 400
Herrmann, United States v..... 179
Hessian v. Patten..... 545
Hilliard, Lyman v..... 117
H. Mendelson & Co. v. United States 145
H. M. Whitney, The..... 12
Hoag, Hogg v..... 677
Hoffman v. Hogg..... 677
Hogan v. Westmoreland Specialty Co. 178
Hogg v. Hoag..... 677
Hogg, Hoffman v..... 677
Holmes v. Corbin..... 367
Hore, National Steel Co. v..... 578
Hormann, Schutte & Co. v. United States..... 50
Hornstein v. United States..... 644
Houghton v. Whitin Mach. Works 84
Howe v. Howe & Owen Ball Bearing Co..... 536
Howe & Owen Ball Bearing Co., Howe v..... 536
Hudson, The Asher J..... 143

Digitized by Google

Page

Hughes, Collin County Nat. Bank of McKinney, Tex., v..... 661
Hull v. Burr..... 61
Hunter & Witcombe, United States v..... 55
Hygienic Chemical Co., Rumford Chemical Works v..... 177

Illinois Cent. R. Co., Payne v..... 589
Imperial Laundry Co., Pittsburgh Laundry Supply Co. v..... 486
Indiana Mfg. Co. v. J. I. Case Threshing Mach. Co..... 343
Iowa, The..... 572
Iverson, Pacific Mail S. S. Co. v... 306

James W. Elwell, The..... 572
Jarrett, Camden v..... 492
J. I. Case Threshing Mach. Co., Indiana Mfg. Co. v..... 343
J. L. Luckenbach, The..... 678
Johnson & Johnson, United States v. 151
Johnston v. United States..... 299
Jonathan Clark & Sons Co., City of Pittsburgh v..... 262
J. R. Crowe Coal & Mining Co., Ætna Indemnity Co. v..... 431

Kane, Erie R. Co. v..... 564
Kenyon v. Fowler..... 567
King v. Supreme Tent Knights of Maccabees of the World..... 678
Kirkland, The Robert R..... 45
Kline, Wilson & Co., New Roads Oilmill & Mfg. Co. v..... 1
Kuttroff, Pickhardt & Co. v. United States..... 679

Lamar v. Spalding..... 111
Lambert Hoisting Engine Co. v. Lidgerwood Mfg. Co..... 350
Lanston Monotype Mach. Co. v. Merganthaler Linotype Co..... 154
Leeds & Catlin Co. v. Victor Talking Mach. Co..... 170
Leon Rheims Co., United States v. 179
Lewis v. Peck..... 211
Lidgerwood Mfg. Co., Lambert Hoisting Engine Co. v..... 350
Lima Locomotive & Machine Co. v. National Steel Castings Co... 593
Logan Natural Gas & Fuel Co., Great Southern Gas & Oil Co. v. 574

Page

Louisville & N. R. Co. v. Fisher.. 584
Louisville & N. R. Co., Scott v... 584
Luckenbach, The J. L..... 678
Lueder, United States v..... 131
Lyman v. Hilliard..... 117

McCune v. Baltimore & O. R. Co. 175
McNaboe v. Columbian Mfg. Co... 81
Macrum v. United States..... 427
Marks v. Gates..... 321
Mast & Co. v. Superior Drill Co... 157
Matthews, The Charles E..... 33
Matthews, The Charles E..... 153
Mauch Chunk, The..... 276
Maxwell v. Federal Gold & Copper Co..... 570
Meadows & Co., United States v... 297
Media, The..... 48
Meehan, Nelson v..... 597
Meighan v. American Grass Twine Co. 124
Mendelson & Co. v. United States 145
Merchants' Nat. Bank of Aurora, Ill., Stephens v..... 119
Merganthaler Linotype Co., Lanston Monotype Mach. Co. v..... 154
Meyer, Benker v..... 270
Michaelsen v. Security Mut. Life Ins. Co..... 334
Midland Contracting Co. v. Toledo Foundry & Machine Co..... 489
Mill Transp. Co., Great Lakes Towing Co. v..... 607
Milwaukee Rubber Works Co., Rubber Tire Wheel Co. v..... 336
Mitchell, H. Baars & Co. v..... 466
Moffat Co., Globe & Rutgers Fire Ins. Co. of New York v..... 91
Montgomery Electric Light & Power Co., Westinghouse Electric & Mfg. Co. v..... 679
Moorman v. Beard..... 265
Moran, The Eugene F..... 153
Morrison v. Burnette..... 391

National Ass'n of Ry. Postal Clerks v. Scott..... 652
National Steel Castings Co., Lima Locomotive & Machine Co. v... 593
National Steel Co. v. Hore..... 578
Nelson v. Meehan..... 597
N. Erlanger, Blumgart & Co. v. United States..... 463
Neville, Quinton v..... 252

Digitized by Google

Page
New Orleans, The..... 19
New Roads Oilmill & Mfg. Co. v. Kline, Wilson & Co..... 1
Newsome, Chicago, M. & St. P. R. Co. v..... 422
Newton & Co., In re..... 23
New York & Cuba Mail S. S. Co. v. Royal Exch. Assur..... 235
New York & T. S. S. Co., Ralli v.. 290
Northwestern State Bank of Hay Springs, Neb., v. Silberman.... 525

Omaha, K. C. & E. R. Co., Rodger Ballast Car Co. v..... 403
Oregon Short Line R. Co., Russell v. 618
Overbrook, The..... 48

Pacific, The..... 515
Pacific Coast Co. v. Yukon Independent Transp. Co..... 625
Pacific Mail S. S. Co. v. Iverson.. 306
Palmer v. Bradley..... 231
Pang Sho Yin v. United States... 484
Passavant & Co., United States v. 679
Patek v. American Smelting & Refining Co..... 284
Patten, Hessian v..... 545
Payne v. Illinois Cent. R. Co..... 589
Peck, Lewis v..... 211
Peck v. Tribune Co..... 202
Pennsylvania, The..... 139
Penobscot Min. Co., Rogers v..... 380
Perkins v. Gibbs..... 68
Peters v. George..... 408
Phonix, The..... 332
Pioneer Min. Co., Bush v..... 320
Pittsburgh Const. Co. v. West Side Belt R. Co..... 501
Pittsburgh Laundry Supply Co. v. Imperial Laundry Co..... 486
Powell, The..... 572
P. P. Mast & Co. v. Superior Drill Co. 157

Quinton v. Neville..... 252

Rainbow v. Young..... 421
Ralli v. New York & T. S. S. Co. 290
Republic Iron & Steel Co. v. Taggart 679
Rheims Co., United States v..... 179
Richmond, The..... 572
Robert R. Kirkland, The..... 45

Page
Robinson & Smith, In re..... 121
Rodger Ballast Car Co. v. Omaha, K. C. & E. R. Co..... 403
Roesch, Davis & Roesch Temperature Controlling Co. v..... 261
Rogers v. Penobscot Min. Co..... 380
Rosencranz v. United States..... 634
Rothschild, In re..... 288
Royal Exch. Assur., New York & Cuba Mail S. S. Co. v..... 235
Rubber Tire Wheel Co. v. Milwaukee Rubber Works Co..... 336
Ruffin, Swift & Co. v..... 243
Rumford Chemical Works v. Hygienic Chemical Co..... 177
Russell v. Oregon Short Line R. Co. 618

St. Gothard, The..... 37
Saks & Co., United States v..... 179
Schafer, Craft v..... 677
Schall & Co. v. United States.... 329
Scott v. Louisville & N. R. Co.... 584
Scott, National Ass'n of Ry. Postal Clerks v..... 652
Security Mut. Life Ins. Co., Michaelsen v..... 334
Silberman, Northwestern State Bank of Hay Springs, Neb., v.. 525
Sonn, Universal Brush Co. v..... 422
Spalding, Lamar v..... 111
Springs & Co. v. Carpenter..... 327
Star Fire Ins. Co., Fries-Breslin Co. v..... 147
Stephens v. Merchants' Nat. Bank of Aurora, Ill..... 119
Struthers-Wells Co., Hammerschlag Mfg. Co. v..... 198
Superior Drill Co., P. P. Mast & Co. v..... 157
Supreme Tent Knights of Maccabees of the World, King v..... 678
Swift & Co. v. Ruffin..... 243
Swofford Bros. Dry Goods Co. v. Bryant..... 23

Taggart, Republic Iron & Steel Co. v..... 679
Thomas Meadows & Co., United States v..... 297
Thomlinson Co., In re..... 550
Thompson, Fidelity & Casualty Co. of New York v..... 324
Tiffany & Co., United States v... 81
Toledo Foundry & Machine Co., Midland Contracting Co. v..... 489

Digitized by Google

Page
Trefousse, Goguenheim & Co., United States v. 679
Tribune Co., Peck v. 202
Tucker, In re 495
Two Hundred and Eighteen and One Half Carats Loose Emeralds v. United States 475

Umbria, The 33
Union Sawmill Co., Arkansas Southeastern R. Co. v. 224
United States, Booth v. 552
United States, Botts v. 646
United States, Carroll v. 245
United States v. Crucible Steel Co. 679
United States, Dalton v. 317
United States, Edward Benneche & Bro. v. 43
United States, Ennis v. 478
United States, Fawcett v. 197
United States, G. Gulbenkian & Co. v. 40
United States, Gourdain v. 309
United States v. Herrmann 179
United States, H. Mendelson & Co. v. 145
United States v. Hormann, Schutte & Co. 50
United States, Hornstein v. 644
United States v. Hunter & Witcombe 55
United States v. Johnson & Johnson 151
United States, Johnston v. 299
United States, Kuttroff, Pickhardt & Co. v. 679
United States v. Leon Rheims Co. 179
United States v. Lueder 131
United States, Macrum v. 427
United States, N. Erlanger, Blumgart & Co. v. 463
United States, Pang Sho Yin v. 484
United States v. Passavant & Co. 679
United States, Rosencranz v. 634
United States v. Saks & Co. 179
United States, Schall & Co. v. 329
United States v. Thomas Meadows & Co. 297

Page
United States v. Tiffany & Co. 81
United States v. Trefousse, Goguenheim & Co. 679
United States, Two Hundred and Eighteen and One Half Carats Loose Emeralds v. 475
United States v. Walsh 472
United States, Wharton v. 58
United States ex rel. Schauffler v. Fidelity & Deposit Co. of Maryland 577
Universal Brush Co. v. Sonn 422

Vera Cruz & P. R. Co. v. Freygang 414
Vera Cruz & P. R. Co. v. Waddell 673
Victor Talking Mach. Co., Leeds & Catlin Co. v. 170

Waddell, Vera Cruz & P. R. Co. v. 673
Wagner, Flickenger Wheel Co. v. .. 677
Walsh, United States v. 472
Waterloo Organ Co., In re 481
West Chicago R. Co. v. Chicago Consolidated Traction Co. 679
Westinghouse, Church, Kerr & Co. v. Callaghan 669
Westinghouse Electric & Mfg. Co. v. Montgomery Electric Light & Power Co. 679
Westmoreland Specialty Co., Hogan v. 178
West Side Belt R. Co., Pittsburgh Const. Co. v. 501
Wharton v. United States 58
Whitin Mach. Works, Houghton v. 84
Whitney, The H. M. 12
Wilkins, Delaware & H. R. Co. v. 27
Wilson v. Brock & Rankin 121
Wilson v. Calculagraph Co. 77
Wineman v. Drake 505
W. N. Bavier, The 12

Yale & Towne Mfg. Co. v. Alder 149
Young, Rainbow v. 421
Yukon Independent Transp. Co., Pacific Coast Co. v. 625

Digitized by Google

Digitized by Google

CASES REPORTED.

ARRANGED UNDER THEIR RESPECTIVE CIRCUITS.

FIRST CIRCUIT.

Page

Curtin, Ex parte..... 495

Hatch v. Curtin..... 495
Houghton v. Whitin Mach. Works 84

Tucker, In re..... 495

United States v. Walsh..... 472

Wharton v. United States..... 58
Wilson v. Calculagraph Co..... 77

SECOND CIRCUIT.

Anna M. Fahy, The..... 48
Asher J. Hudson, The..... 143

Bavier, The W. N..... 12
Baxter & Co., In re..... 106
Beaver Knitting Mills, In re..... 240
Benneche & Bro. v. United States 43
Bong v. Alfred S. Campbell Art Co. 576
Booth v. United States..... 552
Boswell, The..... 572
Bowers Hydraulic Dredging Co. v. Federal Contracting Co..... 52
Buffalo, The..... 531

Castner Electrolytic Alkali Co. v. Davies 510
Charles E. Matthews, The..... 33
Charles E. Matthews, The..... 153
Cuzco, The..... 181

Davis & Roesch Temperature Controlling Co. v. Roesch..... 261
Delaware & H. R. Co. v. Wilkins 27

Page

Edward Benneche & Bro. v. United States..... 43
Elwell, The James W..... 572
Ennis v. United States..... 478
Eriksson v. Goodwin..... 129
Erlanger, Blumgart & Co. v. United States..... 463
Eugene F. Moran, The..... 153

Fahy, The Anna M..... 48
Fawcett v. United States..... 197
Fielding v. Crouse-Hinds Electric Co. 331
15 D. and 18 D, The..... 153
Fri, The..... 205
Furnessia, The..... 126

G. Gulbenkian & Co. v. United States 40
Gladiator, The..... 332
Globe & Rutgers Fire Ins. Co. of New York v. David Moffat Co. 91
Gulbenkian & Co. v. United States 40

Harper, In re..... 565
H. Mendelson & Co. v. United States 145
H. M. Whitney, The..... 12
Hoffman v. Hogg..... 677
Hogg v. Hoag..... 677
Hormann, Schutte & Co. v. United States..... 50
Hudson, The Asher J..... 143

Iowa, The..... 572

James W. Elwell, The..... 572

Kenyon v. Fowler..... 567
Kuttroff, Pickhardt & Co. v. United States..... 679

Digitized by Google

Page

Lanston Monotype Mach. Co. v. Merganthaler Linotype Co..... 154
Leeds & Catlin Co. v. Victor Talking Mach. Co..... 170
Lyman v. Hilliard..... 117

McNaboe v. Columbian Mfg. Co... 81
Matthews, The Charles E..... 33
Matthews, The Charles E..... 153
Mauch Chunk, The..... 276
Media, The..... 48
Meighan v. American Grass Twine Co. 124
Mendelson & Co. v. United States 145
Moran, The Eugene F..... 153

National Ass'n of Ry. Postal Clerks v. Scott..... 652
N. Erlanger, Blumgart & Co. v. United States..... 463
New York & Cuba Mail S. S. Co. v. Royal Exch. Assur..... 235

Overbrook, The..... 48

Pennsylvania, The..... 139
Phonix, The..... 332
Powell, The..... 572

Ralli v. New York & T. S. S. Co. 290
Richmond, The..... 572
Rothschild, In re..... 288

St. Gothard, The..... 37
Schall & Co. v. United States.... 329

Two Hundred and Eighteen and One Half Carats Loose Emeralds v. United States..... 475

Umbria, The..... 33
United States v. Crucible Steel Co. 679
United States v. Herrmann..... 179
United States v. Hormann, Schutte & Co..... 50
United States v. Hunter & Whitcombe 55
United States v. Johnson & Johnson 151
United States v. Leon Rheims Co. 179
United States v. Lueder..... 131

Page

United States v. Passavant & Co. 679
United States v. Saks & Co..... 179
United States v. Thomas Meadows & Co..... 297
United States v. Tiffany & Co.... 81
United States v. Trefousse, Goguenheim & Co..... 679
United States ex rel. Schauffler v. Fidelity & Deposit Co. of Maryland 577
Universal Brush Co. v. Sonn..... 422

Waterloo Organ Co., In re..... 481
Westinghouse Electric & Mfg. Co. v. Montgomery Electric Light & Power Co..... 679
Whitney, The H. M..... 12
W. N. Bavier, The..... 12

Yale & Towne Mfg. Co. v. Alder 149

THIRD CIRCUIT.

Blakely v. Fidelity Mut. Life Ins. Co. 155
Brookfield v. Elmer Glass Works 180

City of Pittsburgh v. Jonathan Clark & Sons Co..... 262
Crawford, Ex parte..... 474

Fries-Breslin Co. v. Star Fire Ins. Co. 147

Hammerschlag Mfg. Co. v. Struthers-Wells Co..... 198
Hogan v. Westmoreland Specialty Co. 178

Kirkland, The Robert R..... 45

Lamar v. Spalding..... 111
Lambert Hoisting Engine Co. v. Lidgerwood Mfg. Co..... 350

McCune v. Baltimore & O. R. Co. 175
Macrum v. United States..... 427
Michaelsen v. Security Mut. Life Ins. Co..... 334

Pacific, The..... 515

Digitized by Google

Page
Peters v. George..... 408
Pittsburgh Const. Co. v. West Side Belt R. Co..... 501
Pittsburgh Laundry Supply Co. v. Imperial Laundry Co..... 486

Robert R. Kirkland, The..... 45
Rumford Chemical Works v. Hygienic Chemical Co..... 177

FOURTH CIRCUIT.

Bergen, The Clara E..... 15

Caldy, The..... 19
Camden v. Jarrett..... 492
Clara E. Bergen, The..... 15

Dumois, The Georg..... 15

Freygang v. Vera Cruz & P. R. Co. 414

Georg Dumois, The..... 15

J. L. Luckenbach, The..... 678

Luckenbach, The J. L..... 678

New Orleans, The..... 19

Springs & Co. v. Carpenter..... 327
Swift & Co. v. Ruffin..... 243

Vera Cruz & P. R. Co. v. Freygang 414
Vera Cruz & P. R. Co. v. Waddell 673

FIFTH CIRCUIT.

Arkansas Southeastern R. Co. v. Union Sawmill Co..... 224

Baars & Co. v. Mitchell..... 466

H. Baars & Co. v. Mitchell..... 466
Hull v. Burr..... 61

New Roads Oilmill & Mfg. Co. v. Kline, Wilson & Co..... 1

SIXTH CIRCUIT.

Page
Craft v. Schafer..... 677

Doran, In re..... 265

Erie R. Co. v. Kane..... 564

Flickenger Wheel Co. v. Wagner.. 677

Great Lakes Towing Co. v. Mill Transp. Co..... 607
Great Southern Gas & Oil Co. v. Logan Natural Gas & Fuel Co. 574
Gwyn v. Cincinnati, N. O. & T. P. R. Co..... 648

King v. Supreme Tent Knights of Maccabees of the World..... 678

Lima Locomotive & Machine Co. v. National Steel Castings Co... 593
Louisville & N. R. Co. v. Fisher 584

Mast & Co. v. Superior Drill Co... 157
Moorman v. Beard..... 265

National Steel Co. v. Hore..... 578

Pang Sho Yin v. United States... 484
Payne v. Illinois Cent. R. Co..... 589
P. P. Mast & Co. v. Superior Drill Co. 157

Republic Iron & Steel Co. v. Taggart 679

Scott v. Louisville & N. R. Co.... 584

SEVENTH CIRCUIT.

Dalton v. United States..... 317

Gourdain v. United States..... 309

Indiana Mfg. Co. v. J. I. Case Threshing Mach. Co..... 343

Lewis v. Peck..... 211

Midland Contracting Co. v. Toledo Foundry & Machine Co..... 489

Digitized by Google

Page

Palmer v. Bradley..... 231
Peck v. Tribune Co..... 202

Robinson & Smith, In re..... 121
Rubber Tire Wheel Co. v. Milwaukee Rubber Works Co..... 336

Stephens v. Merchants' Nat. Bank of Aurora, Ill..... 119

West Chicago R. Co. v. Chicago Consolidated Traction Co..... 679
Wilson v. Brock & Rankin..... 121
Wineman v. Drake..... 505

EIGHTH CIRCUIT.

Ætna Indemnity Co. v. J. R. Crowe Coal & Mining Co..... 431

Benker v. Meyer..... 270

Chicago, M. & St. P. R. Co. v. Heil 400
Chicago, M. & St. P. R. Co. v. Newsome 422
City of Grand Forks v. Allman.. 554
Collin County Nat. Bank of McKinney, Tex., v. Hughes..... 661
Corbin v. Holmes..... 367

Derham v. Donohue..... 657

E. M. Newton & Co., In re..... 23

Fidelity & Casualty Co. of New York v. Thompson..... 324

Hampton Stave Co. v. Gardner.. 521
Hessian v. Patten..... 545
Holmes v. Corbin..... 367
Howe v. Howe & Owen Ball Bearing Co..... 536

Maxwell v. Federal Gold & Copper Co..... 570
Morrison v. Burnette..... 391

Newton & Co., In re..... 23
Northwestern State Bank of Hay Springs, Neb., v. Silberman.... 525

Page

Patek v. American Smelting & Refining Co..... 284
Perkins v. Gibbs..... 68

Quinton v. Neville..... 252

Rainbow v. Young..... 421
Rodger Ballast Car Co. v. Omaha, K. C. & E. R. Co..... 403
Rogers v. Penobscot Min. Co..... 380

Swofford Bros. Dry Goods Co. v. Bryant..... 23

Thomlinson Co., In re..... 550

Westinghouse, Church, Kerr & Co. v. Callaghan..... 669

NINTH CIRCUIT.

Botts v. United States..... 646
Bush v. Pioneer Min. Co..... 320

Carroll v. United States..... 245
Consani v. Brandon..... 304

Golden Cross Min. & Mill Co. v. Free Gold Min. Co..... 355
Graessler & Reichwald, In re.... 304

Hornstein v. United States..... 644

Johnston v. United States..... 299

Marks v. Gates..... 321

Nelson v. Meehan..... 597

Pacific Coast Co. v. Yukon Independent Transp. Co..... 625
Pacific Mail S. S. Co. v. Iverson.. 306

Rosencranz v. United States..... 634
Russell v. Oregon Short Line R. Co. 618

Digitized by Google

CASES [illegible] ED.

Page

Abbie C. Stubbs, The (D. C.) 28 Fed. 720 292
Aberfoyle, The, 1 Blatchf. 360, Fed. Cas. No. 17..... 140
Adam v. Folger, 120 Fed. 260, 56 C. C. A. 540 347
Adam v. Insurance Co., 22 Pick. (Mass.) 163 239
Adam v. Steamship Co. (1898) 2 Q. B. 430 285
Adams v. Insurance Co., 1 Rawle (Pa.) 97 239
Ætna Life Ins. Co. v. Board, 79 Fed. 575, 25 C. C. A. 94..... 397
Agnew v. U. S., 165 U. S. 36, 17 Sup. Ct. 235, 41 L. Ed. 624..... 252
Akers v. Demond, 103 Mass. 318..... 209
Alejandro, The, 56 Fed. 621, 6 C. C. A. 54 39
Alexander v. Horner, 1 McCrary (U. S.) 634, Fed. Cas. No. 169..... 390
Alfson v. Bush Co., 182 N. Y. 393, 75 N. E. 230, 108 Am. St. Rep. 815..... 285
Allen v. Mackay, 1 Sprague, 219, Fed. Cas. No. 228..... 292
Allison v. Insurance Co., 1 App. Cas. 209, 231 .....237, 238
America, The, 92 U. S. 432, 438, 23 L. Ed. 724 278
American Box Mach. Co. v. Crosman (C. C.) 57 Fed. 1021; 61 Fed. 888, 10 C. C. A. 146..... 345
American Bridge Co. v. Seeds, 75 C. C. A. 407, 410, 415, 144 Fed. 605, 608, 613.. 672
American S. S. Co. v. Steel Barge Co., 129 Fed. 65, 63 C. C. A. 507..... 509
American Surety Co. v. Pauly, 170 U. S. 133, 145, 146, 147, 160, 18 Sup. Ct. 552, 557, 558, 42 L. Ed. 977....435, 442, 461, 463
Amos D. Carver, The (D. C.) 35 Fed. 665 613
Anderson County Com'rs v. Beal, 113 U. S. 227, 241, 5 Sup. Ct. 433, 28 L. Ed. 966 .....622, 656
Anerly, The (D. C.) 58 Fed. 794.....154
Annie Lindsley, The, 104 U. S. 185, 26 L. Ed. 716..... 17
Appolos v. Brady, 1 C. C. A. 299, 49 Fed. 401 551
Armour & Co. v. Russell, 75 C. C. A. 416, 144 Fed. 614, 615.....451, 462
Arctic Bird, The (D. C.) 109 Fed. 167..633, 634
Asher J. Hudson, The, 145 Fed. 731.... 144
Ass'n v. Barry, 131 U. S. 100, 120, 9 Sup. Ct. 755, 33 L. Ed. 60..... 666
Ass'n v. Shryock, 20 C. C. A. 3, 11, 73 Fed. 774, 781..... 451

Page

Assurance Co. v. Ass'n, 183 U. S. 308, 357, 22 Sup. Ct. 133, 46 L. Ed. 213..... 524
Atchison, etc., Co. v. Fajardo (Kan.) 86 Pac. 301 295
Atkins v. Byrnes, 71 Ill. 332..... 123
Atlantic Trust Co. v. Dana, 128 Fed. 209, 227, 62 C. C. A. 657, 675..... 406
Atlas Reduction Co. v. Insurance Co., 138 Fed. 497, 498, 71 C. C. A. 21, 22..149, 448
Attorney General v. Navigation Co., 86 N. C. 408, 413..... 398
Augusta R. Co. v. Glover, 92 Ga. 132, 142, 18 S. E. 406..... 286
A. W. Booth, The, 138 Fed. 303, 70 C. C. A. 593 13

Bacon v. Rives, 106 U. S. 99, 104, 1 Sup. Ct. 3, 27 L. Ed. 69..... 384
Badgley v. Beale, 3 Watts (Pa.) 263.... 504
Baggaley v. Iron Co., 90 Fed. 636, 33 C. C. A. 202..... 616
Bailey v. Sundberg, 49 Fed. 533, 1 C. C. A. 387; 145 U. S. 628, 12 Sup. Ct. 259, 36 L. Ed. 855; 154 U. S. 494, 14 Sup. Ct. 1142, 38 L. Ed. 1078.....603, 604
Bailey v. Willeford, 126 Fed. 803; 136 Fed. 332, 69 C. C. A. 226..... 604
Baker v. Kinsey, 38 Cal. 631, 633, 99 Am. Dec. 438 623
Baldwin v. Crow, 86 Ky. 679, 7 S. W. 146.. 269
Ballen & Son v. Jolly, Victoria & Co., Ltd., 6 T. L. R. 345..... 632
Ballentyne v. Smith, 27 Sup. Ct. 527, 528, 205 U. S. 285, 51 L. Ed. 803..... 398
Ball Glove Fastener Co. v. Ball & Socket Co. (C. C.) 36 Fed. 309..... 345
Baltimore & O. R. Co. v. Baldwin, 75 C. C. A. 211, 144 Fed. 53..... 286
Baltimore & O. R. Co. v. Baugh, 149 U. S. 368, 13 Sup. Ct. 914, 37 L. Ed. 772.. 413
Baltimore & O. R. Co. v. Railroad Co., 119 Fed. 678, 57 C. C. A. 322..... 114
Bank v. Jarvis, 28 W. Va. 805..... 398
Bank v. Swann, 9 Pet. 33, 46, 9 L. Ed. 40 660
Bank v. Watterson, 2 Fed. Cas. No. 941.. 660
Bankers' Mut. Ins. Co. v. Bank, 80 C. C. A. 32, 150 Fed. 73..... 441
Bank of Arapahoe v. Bradley & Co., 19 C. C. A. 206, 72 Fed. 867..... 522
Bank of Cooperstown v. Woods, 28 N. Y. 561, 566 661
Barbed Wire Patent, The, 143 U. S. 275, 12 Sup. Ct. 450, 36 L. Ed. 161..... 347
Barber Asphalt Pav. Co. v. Morris, 66 C. C. A. 55, 59, 132 Fed. 945, 949....114, 662
Bardes v. Bank, 178 U. S. 524, 20 Sup. Ct. 1000, 44 L. Ed. 1175.....64, 65

Digitized by Google

Page

Baring v. Galpin, 57 Conn. 352, 18 Atl. 266, 5 L. R. A. 300 26
Barling v. Peters, 25 N. E. 765, 768, 134 Ill. 606 399
Barnes v. District of Columbia, 91 U. S. 540, 23 L. Ed. 440 556
Barnes v. Insurance Co., 51 Me. 110, 81 Am. Dec. 562 149
Barney v. Baltimore City, 6 Wall. 280, 287, 18 L. Ed. 825 571
Barnsdall v. Waltemeyer, 142 Fed. 415, 417, 73 C. C. A. 515, 517 386
Barreda v. Silsbee, 21 How. 146, 166, 167, 16 L. Ed. 86 ..... 451, 460
Barrell v. Newby, 127 Fed. 656, 62 C. C. A. 382 616
Bartlet v. Teah (C. C.) 1 Fed. 768 551
Bartlett v. Vinor, Carthew, 253 504
Bassett v. U. S., 9 Wall. 38, 19 L. Ed. 548 ..... 397, 600
Battey Ex'r v. Holbrook, 77 Mass. 212 .. 663
Baxter, In re, 154 Fed. 22 125
Baylis v. Insurance Co., 113 U. S. 316, 5 Sup Ct. 494, 28 L. Ed. 989 622
Belfast, The, 7 Wall. 637, 19 L. Ed. 266 .. 142
Bella, The (D. C.) 91 Fed. 540, 542 141
Bell v. Bruen, 1 How. 185, 11 L. Ed. 89 .. 244
Bement v. Harrow Co., 186 U. S. 70, 22 Sup. Ct. 747, 46 L. Ed. 1058 ..... 339, 340
Bennett v. Harkrader, 158 U. S. 441, 15 Sup. Ct. 863, 39 L. Ed. 1046 303
Benson v. Railroad Co., 78 Minn. 303, 307, 308, 80 N. W. 1050 623
Berlin v. Melhorn, 75 Va. 639, 641 398
Bessette v. W. B. Conkey Co., 194 U. S. 324, 24 Sup. Ct. 665, 48 L. Ed. 997 79
Bickerdike v. Allen, 157 Ill. 95, 41 N. E. 740, 29 L. R. A. 782 665
Birdsall v. Coolidge, 93 U. S. 69, 23 L. Ed. 802 176
Blanks v. Trust Co., 59 C. C. A. 59, 122 Fed. 849 398
Bloomer v. McQuewan, 14 How. 539, 548, 14 L. Ed. 532 339
Blue Jacket, The, 144 U. S. 371, 12 Sup. Ct. 711, 36 L. Ed. 469 17
Board of Com'rs of Lake County v. Sutliff, 97 Fed. 270, 38 C. C. A. 167 265
Boatmen's Bank v. Fritzlen, 135 Fed. 650, 658, 68 C. C. A. 288, 296 384
Boggus v. State, 34 Ga. 275 638
Bolles v. Outing Co., 175 U. S. 262, 268, 20 Sup. Ct. 94, 44 L. Ed. 156 ..... 453, 454
Bondurant v. Watson, 103 U. S. 281, 26 L. Ed. 447 538
Boone v. Chiles, 10 Pet. 177, 209, 9 L. Ed. 388 545
Bostwick v. Brinkerhoff, 106 U. S. 3, 1 Sup. Ct. 15, 27 L. Ed. 73 599
Bostwick v. Railroad Co., 45 N. Y. 712 .. 634
Bosworth v. Bank, 12 C. C. A. 331, 64 Fed. 615 389
Botany Worsted Mills v. Knott, 82 Fed. 471, 27 C. C. A. 326 209
Bourget v. Monroe, 58 Mich. 573, 25 N. W. 514 324
Bowditch v. Boston, 101 U. S. 16, 25 L. Ed. 980 622
Bowers Hydraulic Dredging Co. v. Contracting Co., 148 Fed. 290 53

Page

Boyce's Ex'r v. Grundy, 3 Pet. (U. S.) 215, 7 L. Ed. 655 387
Bradley v. Slater, 78 N. W. 1069, 58 Neb. 554 397
Brannigan v. Mining Co. (C. C.) 93 Fed. 164 286
Breed v. Bank, 57 App. Div. 475, 68 N. Y. Supp. 68 242
Breslauer, In re (D. C.) 121 Fed. 910 305
Briges v. Sperry, 95 U. S. 401, 403, 24 L. Ed. 390 538
Brine v. Insurance Co., 96 U. S. 627, 639, 24 L. Ed. 858 109
Britannia, The, 153 U. S. 130, 14 Sup. Ct. 795, 38 L. Ed. 660 278
Bronson v. Schulten, 104 U. S. 410, 415, 26 L. Ed. 997 ..... 397, 600, 602
Brookfield v. Glass Works, 144 Fed. 418 .. 180
Brooks v. Topeka, 34 Kan. 280, 8 Pac. 393 257
Brothers, The, 2 Biss. 104, Fed. Cas. No. 1,969 154
Brown v. Brown, 35 Minn. 191, 28 N. W. 238 272
Brown v. Browning, 15 R. I. 422, 7 Atl. 403, 2 Am. St. Rep. 908 200
Brown v. Deposit Co., 128 U. S. 403, 412, 9 Sup. Ct. 127, 32 L. Ed. 468 388
Brown v. Finance Co. (C. C.) 31 Fed. 516 209
Brown v. Insurance Co., 11 Cush. (Mass.) 280 149
Brown v. McGran, 14 Pet. 477, 493, 10 L. Ed. 550 460
Brown v. Overton, 1 Spr. 462, Fed. Cas. No. 2,024 183
Brown v. Wygant & Leeds, 163 U. S. 618, 16 Sup. Ct. 1159, 41 L. Ed. 284 665
Brun v. Mann, 80 C. C. A. 513, 151 Fed. 146, 152 255
Bryan v. Bernheimer, 181 U. S. 185, 21 Sup. Ct. 557, 45 L. Ed. 814 305
Buck v. Swazey, 35 Me. 41, 56 Am. Dec. 681 389
Building & Loan Ass'n v. Logan, 14 C. C. A. 133, 134, 66 Fed. 827, 828 453
Burditt v. Porter, 21 Atl. 955, 63 Vt. 296, 25 Am. St. Rep. 763 388
Burget v. Robinson, 123 Fed. 262, 265, 59 C. C. A. 260 79
Burnett v. Crandall, 63 Mo. 410 389
Burton v. Williams, 63 Neb. 431, 88 N. W. 765 271
Butler v. Railroad Co., 152 Fed. 976, 82 C. C. A. 330 30
Butler v. Steamship Co., 130 U. S. 527, 9 Sup. Ct. 612, 32 L. Ed. 1017 ....612, 613, 615
Butterick v. Holden, 8 Cush. (Mass.) 233 530
Butts v. Railroad Co., 110 Fed. 329, 330, 49 C. C. A. 69 651

Cabaniss v. Mining Co., 116 Fed. 318, 323, 54 C. C. A. 190 231
Caldwell v. Powell, 73 Fed. 483, 19 C. C. A. 592 178
Caldy, The, 123 Fed. 802 20
California v. Southern Pac. Co., 157 U. S. 229, 250, 15 Sup. Ct. 591, 39 L. Ed. 683 231

Digitized by Google

Page

Cameron v. McRoberts, 3 Wheat. 591, 4 L. Ed. 467.....544, 602
Cameron v. Young, 6 How. Prac. (N. Y.) 372 665
Camp v. Thompson, 25 Minn. 175, 180.... 549
Camp v. Ward, 37 Atl. 747, 69 Vt. 286, 60 Am. St. Rep. 929..... 605
Campbell v. The Frank Gilmore (D. C.) 43 Fed. 318 184
Campbell v. Mosby, Litt. Sel. Cas. (Ky.) 358 269
Campbell v. Providence, 9 R. I. 262..... 623
Canda v. Iron Co., 152 Fed. 178..... 167
Canter v. Insurance Co., 3 Pet. 307, 318, 7 L. Ed. 688..... 453
Cape Fear & Deep River Nav. Co. v. Wilcox, 52 N. C. 481, 78 Am. Dec. 260.. 495
Capital Traction Co. v. Hof, 174 U. S. 1, 9, 19 Sup. Ct. 580, 43 L. Ed. 873.... 451
Carnegie Steel Co. v. Byers, 82 C. C. A. 115, 149 Fed. 667, 8 L. R. A. (N. S.) 677 592
Carolina, The (D. C.) 30 Fed. 199..... 39
Carpenter v. Hale, 8 Gray (Mass.) 157.... 468
Carrington v. St. Louis, 89 Mo. 208, 1 S. W. 240, 58 Am. Rep. 108..... 558
Carter v. Nichols, 5 Atl. 197, 58 Vt. 553.. 388
Castle Creek Water Co. v. Aspen, 76 C. C. A. 516, 518, 146 Fed. 8, 11..... 387
Catskill, The (D. C.) 95 Fed. 700..... 281
Cawood Patent, 94 U. S. 695, 24 L. Ed. 238 166
Cayuga County Bank v. Warden, 1 N. Y. 413, 417 661
Cella, Adler & Tilles v. Brown (C. C.) 136 Fed. 439, 442; 144 Fed. 742, 754, 75 C. C. A. 608, 620..... 384
Central Railroad v. Pettus, 113 U. S. 116, 127, 5 Sup. Ct. 387, 28 L. Ed. 915..... 109
Central Trust Co. v. McGeorge, 151 U. S. 129, 14 Sup. Ct. 286, 38 L. Ed. 98..... 585
Chadbourne's Ex'rs v. Coe, 2 C. C. A. 327, 51 Fed. 479-481.....390, 544
Chadwick, The (D. C.) 29 Fed. 521..... 209
Chaffee v. Belting Co., 22 How. 223, 16 L. Ed. 240..... 173
Champion, etc., Co. v. Trust Co., 115 Ky. 863, 872, 75 S. W. 197, 103 Am. St. Rep. 356 442
Chandler v. Pomeroy, 96 Fed. 156, 37 C. C. A. 430..... 163
Chase, In re, 124 Fed. 753, 755, 59 C. C. A. 629..... 500
Chenery v. Railroad Co., 160 Mass. 211, 35 N. E. 554, 22 L. R. A. 575..... 29
Chesapeake, etc., Co. v. Higgins, 85 Tenn. 620, 4 S. W. 47..... 285
Chesebrough v. Conover, 140 N. Y. 382, 35 N. E. 633..... 250
Chicago, B. & Q. R. Co. v. Chicago, 166 U. S. 226, 246, 17 Sup. Ct. 581, 41 L. Ed. 979 451
Chicago City R. Co. v. Pelletier, 134 Ill. 120, 24 N. E. 770.. 250
Chicago Consol. Bottling Co. v. McGinnis, 86 Ill. App. 38..... 623
Chicago, M. & St. P. R. Co. v. Lindeman, 143 Fed. 946, 75 C. C. A. 18..... 422
Chicago, St. P., M. O. R. Co. v. Bryant, 65 Fed. 969, 973-975, 13 C. C. A. 249, 253-255 623

Page

Chicago Title & Trust Co. v. Brown, 183 Ill. 42, 55 N. E. 632, 47 L. R. A. 798.... 233
Chicago Union Bank v. Bank, 136 U. S. 223, 10 Sup. Ct. 1013, 34 L. Ed. 341..... 109
Chicago & N. W. R. Co. v. De Clow, 124 Fed. 142, 145, 61 C. C. A. 34, 37....422, 459
Chicago & N. W. R. Co. v. Nichols, 57 Ill. 464, 466..... 389
Chinnock v. Paterson, 112 Fed. 531, 50 C. C. A. 384..... 178
Chittenden v. Brewster, 2 Wall. 191, 196, 17 L. Ed. 839..... 453
Choctaw, etc., R. Co. v. McDade, 112 Fed. 888, 50 C. C. A. 591..... 581
Christensen, In re, 194 U. S. 458, 24 Sup. Ct. 729, 48 L. Ed. 1072..... 79
Citizens' Bank v. Farwell, 56 Fed. 570, 574, 6 C. C. A. 24, 28..... 667
City of Lincoln v. Street-Light Co., 8 C. C. A. 253, 59 Fed. 756, 758.....444, 445
City of London, The, 1 Wm. Rob. Adm. 88 140
City of Mankato v. Paving Co., 142 Fed. 329, 73 C. C. A. 439..... 114
City of Manning v. Insurance Co., 46 C. C. A. 144, 146, 107 Fed. 52, 54..... 403
City of New Orleans v. Winter, 1 Wheat. 91, 94, 4 L. Ed. 44..... 571
City of Philadelphia, Appeals of, 86 Pa. 179, 182..... 389
City of Wilmington v. Ricaud, 90 Fed. 212, 32 C. C. A. 578..... 428
Clark v. Crego, 47 Barb. (N. Y.) 599, 614 389
Clark v. Holmes, 7 H. & N. 937, 949.... 582
Clark v. Killian, 103 U. S. 766, 769, 26 L. Ed. 607..... 453
Clark v. Smith, 13 Pet. 193, 10 L. Ed. 123 109
Cleary v. Foundry Co., 132 U. S. 612, 614, 10 Sup. Ct. 223, 33 L. Ed. 473.....453, 454
Cleveland, etc., Co. v. Osgood, 36 Ind. App. 34, 73 N. E. 285..... 285
Cliffe v. Steamship Co. (C. C.) 81 Fed. 809 39
Clyde Mattox v. U. S., 146 U. S. 140, 147, 151, 13 Sup. Ct. 50, 36 L. Ed. 917....316, 317
Coal Co. v. Johnson, 6 C. C. A. 148, 56 Fed. 810..... 672
Coal Creek Co. v. Davis, 90 Tenn. 715, 716, 18 S. W. 387..... 580
Coen v. Watkins, 62 Mo. App. 502, 505.. 529, 531
Coffin v. U. S., 156 U. S. 432, 458, 460, 15 Sup. Ct. 394, 39 L. Ed. 481; 162 U. S. 664, 674, 16 Sup. Ct. 943, 40 L. Ed. 1109 .....316, 319
Cohens v. Virginia, 6 Wheat. 410, 5 L. Ed. 257..... 275
Coiron v. Millaudon, 19 How. (U. S.) 113, 15 L. Ed. 575..... 390
Cold Blast Transp. Co. v. Nut Co., 114 Fed. 77, 52 C. C. A. 25, 57 L. R. A. 696 595
Cole Silver Min. Co. v. Water Co., 1 Sawy. (U. S.) 685, Fed. Cas. No. 2,990.. 390
Collier v. Whipple, 13 Wend. (N. Y.) 224, 226 398
Columbia Bank & Bridge Co. v. Haldeman, 7 Watts. & S. 233, 42 Am. Dec. 229 504

Digitized by Google

Page

Columbia Wire Co. v. Wire Co. (C. C.) 71 Fed. 302 339
Com'rs v. Clark, 94 U. S. 278, 284, 24 L. Ed. 59 656
Com. v. O'Hara, 6 Phila. 402 475
Com. v. Poisson, 157 Mass. 510, 32 N. E. 906 250
Comstock v. Holbrook, 82 Mass. 111, 113 664
Conboy v. Bank, 203 U. S. 141, 27 Sup. Ct. 50, 51 L. Ed. 128 578
Condon v. Maynard, 18 Atl. 957, 958, 71 Md. 601 399
Connecticut Fire Ins. Co. v. Buchanan, 73 C. C. A. 111, 141 Fed. 877, 4 L. R. A. (N. S.) 758 445
Consolidated Rubber Tire Co. v. Rubber Co., 116 Fed. 629; 80 C. C. A. 589, 151 Fed. 237 ..... 338, 340
Consolidated Safety Valve Co. v. Valve Co., 113 U. S. 157, 5 Sup. Ct. 513, 28 L. Ed. 939 347
Constable v. Steamship Co., 154 U. S. 51, 14 Sup. Ct. 1062, 38 L. Ed. 903 630
Consumers' Gas Trust Co. v. Quinby, 137 Fed. 882, 70 C. C. A. 220 114
Cook v. Bidwell (C. C.) 8 Fed. 452, 456 .. 389
Cook v. Foley, 81 C. C. A. 237, 152 Fed. 41 ..... 445, 450
Cook v. Insurance Co., 183 Mass. 50, 66 N. E. 597 461
Cooley v. Lobdell, 153 N. Y. 596, 47 N. E. 783 324
Cooper v. Gibbs, 6 Fed. Cas. No. 3,194 660
Copeland v. Bruning, 127 Fed. 550, 552, 63 C. C. A. 435 217
Corporation of New York v. Ransom, 23 How. U. S. 487, 16 L. Ed. 515 161
Cortelyou v. Johnson, 145 Fed. 935, 76 C. C. A. 455 172
Cortelyou v. Lowe, 111 Fed. 1005, 49 C. C. A. 671 171
Corwin Mfg. Co. v. Washer Co. (C. C.) 151 Fed. 938 585
Coughlin v. The Rheola (C. C.) 19 Fed. 926 39
Coupe v. Royer, 155 U. S. 567, 15 Sup. Ct. 199, 39 L. Ed. 263 ..... 176, 177
Cousins v. Railroad Co., 66 Mo. 572 623
Cox v. Bishop, 55 Mo. App. 135 444
Cox v. Railroad Co., 1 Shannon, Tenn. Cases 475 593
Cragin v. Powell, 128 U. S. 691, 9 Sup. Ct. 203, 32 L. Ed. 566 251
Crawford, Ex parte, 27 Sup. Ct. 795, 206 U. S. 561, 51 L. Ed. 1189 475
Crescent Min. Co. v. Wasatch M. Co., 151 U. S. 317-323, 14 Sup. Ct. 348, 38 L. Ed. 177 420
Crocker v. Getchell, 23 Me. 392 660
Cromwell v. Sac County, 94 U. S. 351, 24 L. Ed. 195 276
Crooks v. Bank, 72 App. Div. 331, 76 N. Y. Supp. 92, 495; 177 N. Y. 68, 69 N. E. 228 83
Crosby v. Loop, 13 Ill. 625, 628 388
Cross v. North Carolina, 132 U. S. 131, 10 Sup. Ct. 47, 33 L. Ed. 287 645
Cudahy Packing Co. v. Marcan, 106 Fed. 645, 45 C. C. A. 515, 54 L. R. A. 258 .. 656

Page

Cunningham v. Bank, 103 Fed. 932, 43 C. C. A. 377 266
Curran v. Campion, 29 C. C. A. 26, 29, 85 Fed. 67, 70 388
Curtis v. Feste, Fed. Cas. No. 3,502 475
Curtis v. Innerarity, 6 How. 146-154, 12 L. Ed. 380 420
Curtis v. Leavitt, 15 N. Y. 9, 121, 122 549
Curtis v. March, 3 H. & N. 866 98
Cushman Co. v. Goddard, 95 Fed. 664, 665, 37 C. C. A. 221 78

Dahl v. Copper Co., 132 U. S. 264, 10 Sup. Ct. 97, 33 L. Ed. 325 265
Dauvir v. Morse, 139 Mass. 323, 1 N. E. 123 184
Davidsson v. Hill (1901) 2 K. B. 606 285
Davis v. Bohle, 34 C. C. A. 372, 92 Fed. 325 551
Davis v. Stevens, 17 Blatchf. 259, Fed. Cas. No. 3,653 570
Davis v. Wells, 104 U. S. 170, 26 L. Ed. 686 244
Day v. Newman, 10 Ves. Jr. 300 324
De Baca v. Wilcox, 68 Pac. 922, 923, 11 N. M. 346 665
Debenture Co. v. Dean, 85 Minn. 473, 477, 89 N. W. 848 72
Deering Harvester Co. v. Kelly, 103 Fed. 261, 43 C. C. A. 225 163
Deery v. Cray, 72 U. S. 795, 806, 807, 808, 18 L. Ed. 653 ..... 450, 451, 453
De Kay v. Water Co., 38 N. J. Eq. 161 .. 82
Delano v. Jopling, 1 Litt. (Ky.) 118, 120 .. 663
Delaware, The, 161 U. S. 459, 468, 16 Sup. Ct. 516, 521, 40 L. Ed. 771 ..... 278, 283, 294
Delaware, etc., R. R. v. Converse, 139 U. S. 472, 11 Sup. Ct. 569, 35 L. Ed. 213 .. 621
Delaware, etc., Co. v. Railroad Co., 204 Pa. 25, 53 Atl. 533 505
De Longuemere v. Insurance Co., 10 Johns. (N. Y.) 127, 201 239
Dempsey v. Schawacker, 140 Mo. 680, 38 S. W. 954, 41 S. W. 1100 420
Deni v. Railroad Co., 181 Pa. 525, 37 Atl. 558, 59 Am. St. Rep. 676 ..... 285, 287
Dennick v. Railroad Co., 103 U. S. 11, 19, 26 L. Ed. 439 286
Dennis v. Eddy, 12 Blatchf. 195, Fed. Cas. No. 3,793 308
Deserant v. Railroad Co., 178 U. S. 409, 20 Sup. Ct. 967, 44 L. Ed. 1127 583
Detroit Crude-Oil Co. v. Grable, 94 Fed. 73, 36 C. C. A. 94 580
Dewes Brewing Co. v. Merritt, 82 Mich. 198, 46 N. W. 379, 9 L. R. A. 270 26
Diamond Glue Co. v. Glue Co., 187 U. S. 611, 23 Sup. Ct. 206, 47 L. Ed. 328 .. 503
District of Columbia v. Woodbury, 136 U. S. 450, 10 Sup. Ct. 990, 34 L. Ed. 472 .. 556
Dixon v. Yates, 5 Barn & Adol. 313, 340 .. 469
Dodge v. Norlin, 66 C. C. A. 425, 431, 133 Fed. 363, 369 394
Dolan v. U. S., 116 Fed. 578, 54 C. C. A. 34 642
Donohoe v. McAleer, 37 Mo. 312 531
Donthron v. Phœnix, etc., Co. (Ariz.) 71 Pac. 941, 61 L. R. A. 563 285
Doss v. Tyack, 14 How. 297, 312, 313, 14 L. Ed. 428 ..... 397, 600

Digitized by Google

Page

Douse v. Sargent (D. C.) 48 Fed. 695.... 613
Doyle v. Guarantee Co., 204 U. S. 599, 27 Sup. Ct. 313, 51 L. Ed. 641..... 79
Drake v. State, 17 N. W. 117, 14 Neb. 535 648
Drakeley v. Gregg, 8 Wall. 242, 268, 19 L. Ed. 409..... 460
Dringer v. Receiver, 42 N. J. Eq. 573, 8 Atl. 811..... 606
Ducker, In re, 134 Fed. 43, 67 C. C. A. 117 268
Dullas Case, 139 Fed. 516, 71 C. C. A. 500 477
Dunlop v. U. S., 165 U. S. 486, 503, 17 Sup. Ct. 375, 41 L. Ed. 799..... 319
Durland v. U. S., 161 U. S. 306, 312, 16 Sup. Ct. 508, 40 L. Ed. 709..... 313
Duval v. Pullman Co., 62 Fed. 265, 10 C. C. A. 331, 33 L. R. A. 715..... 589
Dwight v. Merritt (C. C.) 4 Fed. 614.... 666

E. A. Packer, The (C. C.) 49 Fed. 92, 98 517
Earl of Chesterfield v. Jansen, 2 Ves. Sr. 125 324
Eastman v. Reid, 101 Ala. 320, 13 South. 46 324
Edith Goddon, The (D. C.) 23 Fed. 43.... 39
Edmunson v. Car Co., 92 Fed. 324, 34 C. C. A. 382..... 588
Edson v. Edson, 108 Mass. 590, 11 Am. Rep. 393 606
Edwards v. State, 90 Ga. 143, 15 S. E. 744 250
Egan v. Murray, 80 Iowa, 180, 45 N. W. 563 250
Elizabeth v. Pavement Co., 97 U. S. 126, 24 L. Ed. 1000..... 167
Elliott v. Railroad, 150 U. S. 245, 14 Sup. Ct. 85, 37 L. Ed. 1068.....30, 33
Elsasser v. Haines, 52 N. J. Law, 10, 18 Atl. 1095, 1098,.....663, 664
Emma Silver Min. Co. v. Mining Co. (C. C.) 12 Fed. 815..... 108
Emslie, In re, 102 Fed. 292, 42 C. C. A. 350 123
Equitable Life Assur. Co. v. McElroy, 28 C. C. A. 365, 376, 83 Fed. 631, 642..... 455
Erie R. Co. v. Kane, 142 Fed. 632, 73 C. C. A. 672..... 564
Etheridge v. Sperry, 139 U. S. 276, 11 Sup. Ct. 565, 35 L. Ed. 171..... 109
Etting v. Bank, 2 Pa. 355, 44 Am. Dec. 205, 11 Wheat. 59, 6 L. Ed. 419.....460, 660
Eugene, The (D. C.) 83 Fed. 222, 31 C. C. A. 345, 37 Fed. 1001..... 141
Eureka Co. v. Bailey, 11 Wall. 488, 20 L. Ed. 209 344
Eureka Fertilizer Co. v. Railroad Co., 27 Atl. 1035, 1036, 78 Md. 179..... 460
Eva B. Hall, The (D. C.) 114 Fed. 755.... 184
Evans v. Mfg. Co., 118 Mo. 548, 24 S. W. 175 420
Evans v. Maury, 112 Pa. 300, 312, 3 Atl. 850 399
Express, The (D. C.) 44 Fed. 392, 46 Fed. 860, 52 Fed. 890, 3 C. C. A. 342..... 154
Express Co. v. Kountze, 8 Wall. 342, 19 L. Ed. 457..... 538

Farmers' Loan & Trust Co. v. Railroad Co., 177 U. S. 51, 20 Sup. Ct. 564, 44 L. Ed. 667..... 113

Page

Farragut, The, 10 Wall. (U. S.) 334, 19 L. Ed. 946..... 17
Faxon, The, 75 Fed. 312, 21 C. C. A. 366.. 612
Fellows v. Fellows, 4 Johns. Ch. (N. Y.) 25..... 219
Felton v. Girardy, 104 Fed. 127, 43 C. C. A. 439 581
Felton v. Spiro, 78 Fed. 576, 581, 24 C. C. A. 324 316
Fidelity Ins. & Safe-Deposit Co. v. Railroad Co. (C. C.) 98 Fed. 475, 476..... 398
Fidelity & Deposit Co. v. Courtney, 186 U. S. 342, 22 Sup. Ct. 833, 46 L. Ed. 1193 435
Fidelity & Deposit Co. v. Trust Co. (C. C.) 143 Fed. 156..... 358
Fidelity & Deposit Co. v. U. S., 187 U. S. 315, 330, 23 Sup. Ct. 120, 47 L. Ed. 194 491
Field v. Mayor, 2 Seld. (N. Y.) 179, 188, 57 Am. Dec. 176..... 389
Files v. Brown, 59 C. C. A. 403, 407, 408, 124 Fed. 133, 137, 138..... 398
Filley v. Register, 4 Minn. 391 (Gil. 296, 300, 309) 77 Am. Dec. 522..... 549
Fink v. O'Neil, 106 U. S. 272, 1 Sup. Ct. 325, 27 L. Ed. 196..... 668
Finn v. Brown, 142 U. S. 56, 67, 70, 12 Sup. Ct. 136, 139, 140, 35 L. Ed. 936..... 569
First Nat. Bank, In re, 135 Fed. 62, 67 C. C. A. 536..... 266
First Nat. Bank v. Trust Co., 198 U. S. 280, 25 Sup. Ct. 693, 49 L. Ed. 1051.... 497
Fischer-Hansen v. Railroad Co., 173 N. Y. 492, 66 N. E. 395.....110, 125
Fisher v. Baker, 203 U. S. 174, 182, 27 Sup. Ct. 135, 51 L. Ed. 142..... 421
Fisher v. Insurance Co., 69 N. Y. 163.... 335
Flahrity v. Railroad Co., 56 Fed. 908, 6 C. C. A. 167..... 394
Fleming v. Lay, 109 Fed. 952, 48 C. C. A. 748 .....293, 294
Forbes v. Aspinall, 13 East, 323.....237, 239
Force v. Insurance Co. (D. C.) 35 Fed. 767 613
Ford v. Williams, 21 How. 287, 16 L. Ed. 36 616
Fordyce v. Railroad Co. (C. C.) 145 Fed. 544 405
Fosdick v. Schall, 99 U. S. 235, 255, 25 L. Ed. 339..... 408
Fourth Nat. Bank v. Noonan, 88 Mo. 372, 377 389
Fourth St. Bank v. Yardley, 165 U. S. 634, 644, 17 Sup. Ct. 439, 41 L. Ed. 855.. 389
Fowler v. Trust Co., 141 U. S. 384, 12 Sup. Ct. 1, 35 L. Ed. 786..... 601
Fox v. Ohio, 5 How. 410, 12 L. Ed. 213.. 645
Frame v. Mining Co., 108 Fed. 750, 47 C. C. A. 664 161
Freeman, The, v. Buckingham, 59 U. S. 182, 15 L. Ed. 341..... 141
Friedly v. Giddings, 119 Fed. 438.....474, 475
Fries, Breslin Co. v. Insurance Co., 150 Fed. 611..... 147
Friese v. Hummel, 26 Or. 145, 37 Pac. 458, 46 Am. St. Rep. 610..... 605
Frizzell v. Railroad Co., 59 C. C. A. 382, 384, 124 Fed. 176, 178..... 455
Fuel Co. v. Danielson, 6 C. C. A. 636, 57 Fed. 915..... 459

Digitized by Google

Page

Fuller, Ex parte, 182 U. S. 562, 21 Sup. Ct. 871, 45 L. Ed. 1230..... 600
Fuller v. Berger, 120 Fed. 274, 56 C. C. A. 588, 65 L. R. A. 381.....339, 349
Funk v. Publishing Co., 76 Hun (N. Y.) 497, 27 N. Y. Supp. 1089..... 205

Gage v. Herring, 107 U. S. 640, 2 Sup. Ct. 819, 27 L. Ed. 601..... 91
Gamewell Co., In re, 73 Fed. 908, 910, 20 C. C. A. 111..... 79
Garr v. Bright, 1 Barb. Ch. (N. Y.) 157.. 358
Garretson v. Clark, 15 Blatchf. (U. S.) 70, Fed. Cas. No. 5,248, 111 U. S. 120, 4 Sup. Ct. 291, 28 L. Ed. 371.....167, 168
Garretzen v. Duenckel, 50 Mo. 104, 11 Am. Rep. 405 623
Gassett v. Glazier, 43 N. E. 193, 195, 165 Mass. 473 460
Gates v. Beecher, 60 N. Y. 518, 527, 19 Am. Rep. 207..... 660
Gaukler v. Railroad Co., 130 Mich. 666, 90 N. W. 660..... 651
Gazelle v. Doty, 73 Ill. App. 406, 408.... 491
Geer v. Alkali Works, 190 U. S. 428, 432, 23 Sup. Ct. 807, 47 L. Ed. 1122.... 384
George Presley, The, 111 Fed. 555, 49 C. C. A. 438..... 509
Georgia R. Co. v. Wood, 94 Ga. 126, 21 S. E. 288, 47 Am. St. Rep. 146..... 623
Getchell v. Maney, 69 Me. 442, 444, 40 Am. Rep. 388..... 389
Gilchrist v. Godman (D. C.) 79 Fed. 970 614
Gilchrist v. Insurance Co., 104 Fed. 566, 573, 44 C. C. A. 43, 50..... 614
Giles Loring, The (D. C.) 48 Fed. 463, 473 .....292, 613
Gilmer v. Higley, 110 U. S. 47, 50, 3 Sup. Ct. 471, 28 L. Ed. 62..... 451
Gladys, The, 144 Fed. 653, 75 C. C. A. 455 34
Glenn v. Garth, 133 N. Y. 18, 30 N. E. 649, 31 N. E. 344..... 570
Goddard v. Foster, 17 Wall. 123, 142, 21 L. Ed. 589..... 460
Goddard v. Ordway, 101 U. S. 745, 25 L. Ed. 1040 .....397, 600
Gokey v. Fort (D. C.) 44 Fed. 364..... 613
Goldberg, In re (D. C.) 121 Fed. 578.... 305
Good v. Daland, 121 N. Y. 1, 24 N. E. 15.. 339
Goode v. U. S., 159 U. S. 663, 16 Sup. Ct. 136, 40 L. Ed. 297..... 480
Goodson v. Ellisson, 3 Russ. 583..... 390
Goodyear Tire & Rubber Co. v. Wheel Co., 116 Fed. 363, 53 C. C. A. 583..... 338
Gordon v. Bank, 144 U. S. 97, 103, 12 Sup. Ct. 657, 36 L. Ed. 360..... 538
Gordon v. Gilfoil, 99 U. S. 168, 25 L. Ed. 383 114
Gourdain v. U. S., 154 Fed. 453.....318, 319
Grace v. Insurance Co., 109 U. S. 278, 282, 3 Sup. Ct. 207, 27 L. Ed. 932..... 441
Graffam v. Burgess, 117 U. S. 180, 191, 192, 6 Sup. Ct. 686, 29 L. Ed. 839..... 399
Graham v. Samuel, 1 Dana (Ky.) 166... 269
Grain v. Aldrich, 38 Cal. 514, 521, 99 Am. Dec. 423 389
Grand Trunk R. Co. v. Uves, 144 U. S. 408, 12 Sup. Ct. 679, 36 L. Ed. 485..... 625
Granite City Bank, In re, 137 Fed. 818, 822, 70 C. C. A. 316..... 68

Page

Grant v. Mountain Co., 93 Tenn. 691, 28 S. W. 90, 27 L. R. A. 98..... 125
Grant v. Poillon, 20 How. 162, 15 L. Ed. 871 143
Grapeshot, The, 9 Wall. 129, 136, 19 L. Ed. 651..... 611
Graver v. Faurot, 64 Fed. 241; 76 Fed. 257, 22 C. C. A. 156.....603, 604, 606
Great Southern Gas & Oil Co. v. Fuel Co., 126 Fed. 623, 61 C. C. A. 359..... 574
Greco v. The Sarnia, 147 Fed. 106, 77 C. C. A. 332..... 181
Green v. Superior Court, 78 Cal. 556, 21 Pac. 307, 541..... 636
Greene v. Iron Co., 88 Fed. 207, 215, 31 C. C. A. 458..... 570
Greenwood v. Curtis, 6 Mass. 358, 4 Am. Dec. 145..... 209
Gregg v. Trust Co., 197 U. S. 183, 25 Sup. Ct. 415, 49 L. Ed. 717..... 406
Gregory v. Atkinson (D. C.) 127 Fed. 183, 185 66
Gregory v. Morris, 96 U. S. 619, 24 L. Ed. 740 .....444, 446
Gregory v. Stetson, 133 U. S. 579, 10 Sup. Ct. 422, 33 L. Ed. 792..... 231
Griffin v. Shepard, 124 N. Y. 70, 26 N. E. 339 72
Griggs v. Houston, 104 U. S. 553, 26 L. Ed. 840..... 622
Groton Bridge & Mfg. Co. v. Brick Co., 136 Fed. 27, 33, 60 C. C. A. 577, 583..... 448
Guarantee Co. v. Bank, 26 C. C. A. 146, 80 Fed. 766..... 442
Guarantee Co. v. Insurance Co., 59 C. C. A. 376, 379, 124 Fed. 170, 173..383, 394, 453, 454
Guaranty Trust Co. v. Railroad Co., 130 Fed. 801, 805, 65 C. C. A. 65..... 218
Gutwillig, In re, 90 Fed. 475, 34 C. C. A. 377, 92 Fed. 337..... 551

Hall v. Hudson, 2 Sprague, 65, Fed. Cas. No. 5,935 143
Hamilton v. Railroad Co., 183 Pa. 638, 38 Atl. 1085 651
Hardin v. Boyd, 113 U. S. 763, 5 Sup. Ct. 771, 28 L. Ed. 1141..... 344
Harkison v. Harkison, 41 C. C. A. 201, 101 Fed. 71..... 452
Hart v. Ten Eyck, 2 Johns. Ch. (N. Y.) 62, 108 169
Hart v. Wire Co., 91 Mo. 414, 421, 4 S. W. 123 444
Hartrich v. Hawes, 202 Ill. 334, 67 N. E. 13 582
Hatch v. Oil Co., 100 U. S. 124, 130, 25 L. Ed. 554.....468, 470
Hat Sweat Mfg. Co. v. Porter (C. C.) 34 Fed. 745 345
Havana, The, 35 C. C. A. 148, 92 Fed. 1007 611
Hawley v. Fairbanks, 108 U. S. 543, 551, 2 Sup. Ct. 846, 27 L. Ed. 820..... 219
Hayden v. Thompson, 17 C. C. A. 592, 71 Fed. 60 388
Hayes v. Williams, 17 Colo. 465, 30 Pac. 352 287
Heaton Peninsular, etc., Co. v. Specialty Co., 77 Fed. 294, 297, 25 C. C. A. 267, 35 L. R. A. 728.....171, 345

Digitized by Google

Page
Helm v. Logan's Heirs, 4 Bibb (Ky.) 78 269
Henderson v. Coke Co., 140 U. S. 25, 40, 11 Sup. Ct. 691, 35 L. Ed. 332..... 397
Henderson v. Reynolds, 84 Ga. 159, 10 S. E. 734, 7 L. R. A. 327..... 98
Henry, In re, 123 U. S. 372, 8 Sup. Ct. 142, 31 L. Ed. 174..... 553
Henry v. Hinman, 25 Minn. 199..... 548
Henry v. Woods, 77 Mo. 277..... 530
Herbert v. Butler, 97 U. S. 319, 24 L. Ed. 958 622
Herring v. Richards (D. C.) 3 Fed. 439, 443 549
Herrmann v. U. S., 141 Fed. 486, 145 Fed. 843 179
Hesterberg v. Clark, 166 Ill. 241, 46 N. E. 734, 57 Am. St. Rep. 135..... 234
Heyman, In re, 95 Fed. 800, 2 Am. Bankr. Rep. 651 242
Higgins v. McCrea, 116 U. S. 671, 680, 6 Sup. Ct. 557, 29 L. Ed. 764..... 616
Higgins v. Senior, 8 Mees. & W. 844.... 616
Hilton v. Dickinson, 108 U. S. 165, 174, 2 Sup. Ct. 424, 27 L. Ed. 688..... 522
Hilton v. Guyot, 159 U. S. 113, 16 Sup. Ct. 139, 40 L. Ed. 95..... 603
H. Mendelson & Co. v. U. S., 146 Fed. 78 145
Hodges v. Shuler, 22 N. Y. 114..... 660
Hoe v. Knap (C. C.) 27 Fed. 204..... 349
Hoe v. Wilson, 76 U. S. 501, 19 L. Ed. 762 .....390, 391
Holmes, In re, 73 C. C. A. 491, 142 Fed. 291 550
Holmes v. Goldsmith, 147 U. S. 150, 164, 13 Sup. Ct. 288, 292, 37 L. Ed. 118..... 675
Holt v. Dorsey, 12 Fed. Cas. 428; 16 Fed. Cas. 1309..... 428
Holton v. Davis, 108 Fed. 138, 47 C. C. A. 246 606
Homestake Min. Co. v. Fullerton, 16 C. C. A. 545, 553, 69 Fed. 923, 931..... 403
Honnett v. Williams, 66 Ark. 148, 152, 49 S. W. 495..... 389
Hopt v. Utah, 120 U. S. 430, 7 Sup. Ct. 614, 30 L. Ed. 708..... 250
Hornor v. Henning, 93 U. S. 228, 23 L. Ed. 879..... 118
Hostetter v. Park, 137 U. S. 30, 11 Sup. Ct. 1, 34 L. Ed. 568..... 630
Housatonic Bank v. Laflin, 5 Cush. (Mass.) 546, 548..... 661
House, Hazard & Co., In re, 91 Fed. 96, 33 C. C. A. 356..... 305
Howe v. Howe & Owen B. B. Co., 83 C. C. A. 536, 154 Fed. 820.....385, 387
Hudson & Co. v. Railroad Co., 92 Iowa, 231, 60 N. W. 608, 54 Am. St. Rep. 550 629
Hughes v. Shreve, 60 Ky. 547..... 665
Huidekoper v. Locomotive Works, 99 U. S. 258, 260, 25 L. Ed. 344..... 408
Humiston v. Smith, 21 Cal. 129, 135..... 665
Humphrey v. Tatman, 198 U. S. 91, 25 Sup. Ct. 567, 49 L. Ed. 956..... 26
Hunt v. Fidelity & C. Co., 99 Fed. 242, 245, 39 C. C. A. 496, 499..... 447

Illinois, The, 2 Flip. 383, Fed. Cas. No. 7,005; 103 U. S. 298, 26 L. Ed. 562.... 143
Illinois Cent. R. Co. v. Davies, 76 C. C. A. 613, 146 Fed. 247..... 446

Page
Illinois Trust & Sav. Bank v. Doud, 44 C. C. A. 389, 407, 408, 409, 413, 414, 415, 105 Fed. 123, 141, 143, 147, 148, 149, 52 L. R. A. 481.....405, 406, 407, 408
Improvement Co. v. Munson, 14 Wall. 442, 20 L. Ed. 867..... 622
Indian Land & Trust Co. v. Shoenfelt, 68 C. C. A. 196, 199, 135 Fed. 484, 487.... 572
Inland Seaboard Coasting Co. v. Tolson, 139 U. S. 551, 11 Sup. Ct. 653, 35 L. Ed. 270 625
Insley v. U. S., 150 U. S. 512, 14 Sup. Ct. 158, 37 L. Ed. 1163..... 665
Insurance Co. v. Bullene, 51 Kan. 764, 774, 33 Pac. 467..... 389
Insurance Co. v. Comstock, 16 Wall. 258, 269, 21 L. Ed. 493..... 451
Insurance Co. v. Connelly, 104 Tenn. 93, 56 S. W. 828..... 149
Insurance Co. v. Cottrell, 9 S. E. 132, 133, 85 Va. 857, 17 Am. St. Rep. 108..... 398
Insurance Co. v. Folsom, 18 Wall. 237, 249, 21 L. Ed. 827..... 451
Insurance Co. v. Thomas, 82 Fed. 406, 408, 27 C. C. A. 42, 45, 47 L. R. A. 450.. 524
Insurance Co. v. Wolff, 95 U. S. 326, 332, 24 L. Ed. 387..... 524
Insurance Co. v. Young's Adm'r, 23 Wall. 85, 23 L. Ed. 152..... 442
Interior Const. Co. v. Gibney, 160 U. S. 217, 219, 220, 16 Sup. Ct. 272, 40 L. Ed. 401 490
Iron Co. v. Pace, 101 Tenn. 476, 48 S. W. 232 582
Iroquois, The, 194 U. S. 240, 24 Sup. Ct. 640, 48 L. Ed. 955..... 183
Irrawaddy, The, 171 U. S. 187, 18 Sup. Ct. 831, 43 L. Ed. 130..... 294

Jackson v. Railroad Co., 13 Lea (Tenn.) 491, 49 Am. Rep. 663..... 651
Jackson v. Fidelity & C. Co., 21 C. C. A. 394, 75 Fed. 359, 365..... 442
Jacobsen v. Expedition Co., 112 Fed. 73, 50 C. C. A. 121..... 308
James v. Newton, 142 Mass. 366, 372, 378, 8 N. E. 122, 56 Am. Rep. 692..... 389
Jamestown, The (D. C.) 114 Fed. 593..... 509
Jane Grey, The (D. C.) 99 Fed. 582..... 292
Jarnagin v. Ass'n, 133 Fed. 892, 895, 66 C. C. A. 622, 68 L. R. A. 499..... 651
Jeffersonville, etc., Co. v. Hendricks, 41 Ind. 48, 71 285
Jeffries v. De Hart, 102 Fed. 765, 42 C. C. A. 615..... 40
Jegon v. Vivian, L. R. 6 Ch. App. 742, 761 575
Jerome v. McCarter, 94 U. S. 736, 24 L. Ed. 136..... 358
Johnson v. Brown, 130 Ind. 543, 28 N. E. 698 250
Johnson v. Hulings, 103 Pa. 501, 49 Am. Rep. 131.....504, 505
Johnson County v. Bryson, 27 Mo. App. 341, 349..... 389
Jonathan Clark & Sons Co. v. Pittsburg (C. C.) 146 Fed. 441..... 264
Jones v. Andrews, 10 Wall. 327, 331, 19 L. Ed. 935..... 538

Digitized by Google

Page

Jones v. Clifton, 101 U. S. 225, 227, 25 L. Ed. 908 549
Jones v. Electric Co., 75 C. C. A. 631, 643, 646, 144 Fed. 765, 777, 780 388
Journey v. Pierce, 2 Houst. (Del.) 176 .. 660
Jugiro, In re, 140 U. S. 291, 295, 296, 11 Sup. Ct. 770, 771, 772, 35 L. Ed. 510 78
Julian v. Trust Co., 193 U. S. 93, 109, 24 Sup. Ct. 399, 48 L. Ed. 629 ..216, 218, 222, 224
Justices v. Murray, 9 Wall. 274, 277, 19 L. Ed. 658 451

Kansas City, M. & B. R. Co. v. Robertson, 19 South. 432, 109 Ala. 296 389
Kansas & A. V. R. Co. v. Waters, 16 C. C. A. 609, 70 Fed. 28 672
Kate Cann, The (D. C.) 2 Fed. 246 39
Kauffman v. Raeder, 47 C. C. A. 278, 284, 286, 108 Fed. 171, 177, 179, 54 L. R. A. 247 542
Kearns, In re (D. C.) 64 Fed. 481 677
Kehr v. Smith, 20 Wall. 31, 35, 22 L. Ed. 313 ..... 548, 549
Keller v. Railroad Co., 183 N. Y. 67, 75 N. E. 965 29
Kelley v. Boettcher, 29 C. C. A. 14, 85 Fed. 55 388
Kellum v. Emerson, 2 Curt. 79, Fed. Cas. No. 7,669 143
Kelly v. Security Co., 186 N. Y. 16, 78 N. E. 584 336
Kellyville Coal Co. v. Petraytis, 195 Ill. 215, 63 N. E. 94, 88 Am. St. Rep. 191 .. 285
Kendig v. Dean, 97 U. S. 423, 426, 24 L. Ed. 1061 ..... 390, 544
Kenilworth, The (D. C.) 137 Fed. 1003; 144 Fed. 376, 75 C. C. A. 314, 4 L. R. A. (N. S.) 49 184
Kennedy v. Hazleton, 128 U. S. 671, 9 Sup. Ct. 202, 32 L. Ed. 576 544
Kennedy v. The Sarmatian (C. C.) 2 Fed. 911 14
Kennett v. Chambers, 14 How. 38, 14 L. Ed. 316 209
Kenney v. Meddaugh, 118 Fed. 209, 55 C. C. A. 115 580
Kensington, The, 94 Fed. 885, 36 C. C. A. 533; 183 U. S. 263, 22 Sup. Ct. 102, 46 L. Ed. 190 210
Kenworthy Case, 68 Fed. 908, 16 C. C. A. 65 464
Kenyon v. Ass'n, 39 App. Div. 293, 57 N. Y. Supp. 60 335
Kessler v. State, 46 S. E. 408, 119 Ga. 301 643
Keyser v. Hitz, 133 U. S. 138, 149, 10 Sup. Ct. 290, 294, 33 L. Ed. 531 569
Keystone Bridge Co. v. Iron Co., 95 U. S. 274, 24 L. Ed. 344 426
Kiddoo Bros. v. Dalton, 73 Mo. App. 667 389
King v. Hamilton, 4 Pet. 311-327, 7 L. Ed. 869 ..... 322, 323
King Gruffydd, The, 131 Fed. 189, 65 C. C. A. 495 39
Kinney, In re (D. C.) 102 Fed. 468 677
Kinsman v. Parkhurst, 18 How. 289, 15 L. Ed. 385 344
Kirk v. U. S. (C. C.) 124 Fed. 324, 335; 131 Fed. 331; 137 Fed. 753, 755, 70 C. C. A. 187 668
Knapp, Matter of, 85 N. Y. 284 125

Page

Knatvold v. Wilkinson, 83 Minn. 265, 267, 86 N. W. 99 548
Kneeland v. Trust Co., 136 U. S. 89, 98, 10 Sup. Ct. 950, 34 L. Ed. 379 408
Komuk, The (D. C.) 120 Fed. 841 154
Krohn v. The Julia (C. C.) 37 Fed. 369 .. 143

La Bourgogne, 139 Fed. 433, 71 C. C. A. 489 292
La Champagne, In re (D. C.) 53 Fed. 398 129
Lackawanna, etc., Co. v. Loan, etc. Co., 176 U. S. 298, 303, 315, 20 Sup. Ct. 363, 44 L. Ed. 475 407
La Due v. Bank, 31 Minn. 33, 16 N. W. 426 658
Lafayette Co. v. Wonderly, 92 Fed. 313, 34 C. C. A. 360 668
Lamar v. Spalding, 203 U. S. 584, 27 Sup. Ct. 782, 51 L. Ed. 328 113
Lamaster v. Keeler, 123 U. S. 376, 391, 8 Sup. Ct. 197, 31 L. Ed. 238 667
Langan v. Supreme Council, 174 N. Y. 270, 66 N. E. 932 335
Lange, Ex parte, 18 Wall. 163, 21 L. Ed. 872 397
Lanigan v. Bradley, etc., Co., 50 N. J. Eq. 201, 24 Atl. 505 389
Langton v. Higgins, 4 H. & N. 400 469
Larson v. Grand Forks, 3 Dak. 307, 19 N. W. 414 558
Lasher v. Stimson, 145 Pa. 30, 23 Atl. 552 505
Laverty v. Clausen (D. C.) 40 Fed. 542 .. 613
Lawrence v. Bayard, 7 Paige (N. Y.) 70 72
Lawrence v. McCalmont, 2 How. 450, 11 L. Ed. 326 244
Lawrence v. Nelson, 143 U. S. 215, 12 Sup. Ct. 440, 36 L. Ed. 130 ...273, 274, 275, 276
Lee v. Oil Co., 126 N. Y. 579, 27 N. E. 1018 110
Leggett v. Humphreys, 21 How. 66, 16 L. Ed. 50 245
Leonard v. Land Co., 115 U. S. 465, 468, 6 Sup. Ct. 127, 29 L. Ed. 445 79
Leonard v. Railroad Co., 68 Mo. App. 48, 50 389
Lewis v. Parrish, 53 C. C. A. 77, 115 Fed. 285 271
Lewis v. Switz (C. C.) 74 Fed. 381 570
Lillard v. Warehouse Co., 134 Fed. 168, 174, 67 C. C. A. 74 596
Lincoln v. Power, 151 U. S. 436, 438, 14 Sup. Ct. 387, 38 L. Ed. 224 ....250, 403, 451
Lindsey v. Ass'n (D. C.) 4 Fed. 48 82
Linford v. Ellison, 155 U. S. 503, 508, 15 Sup. Ct. 179, 39 L. Ed. 239 572
Liverpool, etc., Ins. Co. v. Kearney, 180 U. S. 132, 136, 21 Sup. Ct. 326, 45 L. Ed. 460 441
Liverpool & Great Western S. S. Co. v. Insurance Co., 129 U. S. 397, 9 Sup. Ct. 469, 32 L. Ed. 788 210
Lloyd v. Fulton, 91 U. S. 479, 485, 23 L. Ed. 363 549
Lockman v. Lang, 128 Fed. 279, 62 C. C. A. 550 161
Logan v. Goodwin, 109 Fed. 490, 495, 43 C. C. A. 658, 663 667
Logan v. Le Mesurier, 6 Moore, P. C. C. 116 469

Digitized by Google

Page

London Assurance v. Companhia De Moagens, 167 U. S. 149, 159, 17 Sup. Ct. 785, 42 L. Ed. 113..... 441
Looney v. Railroad Co., 200 U. S. 480, 26 Sup. Ct. 204, 50 L. Ed. 564..... 592
Lottery Case, 188 U. S. 321, 353, 23 Sup. Ct. 321, 47 L. Ed. 492..... 314
Loudenback Fertilizer Co. v. Phosphate Co., 121 Fed. 298, 58 C. C. A. 220, 61 L. R. A. 402..... 595
Loudon v. Taxing District, 104 U. S. 771, 774, 26 L. Ed. 923..... 453
Louisville Trust Co. v. Stockton, 18 C. C. A. 406, 72 Fed. 1..... 428
Louisville & N. R. Co. v. Schmidt, 177 U. S. 230, 20 Sup. Ct. 620, 44 L. Ed. 747.. 113
Lovejoy v. U. S., 128 U. S. 171, 9 Sup. Ct. 57, 32 L. Ed. 389..... 250
Low v. Blinco, 10 Bush (Ky.) 331..... 269
Lowenstein v. People, 54 Barb. (N. Y.) 299 639
Lowndes v. The Phenix (D. C.) 34 Fed. 760 39
Lucy, The, 74 Fed. 572, 20 C. C. A. 660.. 509
Luduc v. Ward, 20 Q. B. Div. 475....631, 632
Luke v. Calhoun County, 52 Ala. 115.... 285, 287
Lyndhurst, The (D. C.) 92 Fed. 681..... 154

McCanna & Co. v. Citizens' Co., 76 Fed. 420, 24 C. C. A. 11, 35 L. R. A. 236.... 505
McCord v. Knowlton, 79 Minn. 299, 82 N. W. 589..... 548
McDonald v. Iron Co., 140 Mich. 401, 103 N. W. 829..... 582
McDougall v. Walling, 58 Pac. 669, 21 Wash. 478, 75 Am. St. Rep. 849..... 605
McElwee v. Lumber Co., 69 Fed. 305, 16 C. C. A. 232..... 470
McFarlane v. Golling, 76 Fed. 23, 22 C. C. A. 23..... 163
McInerney v. Denver, 29 Pac. 516, 17 Colo. 302..... 637
McKay v. Smith (C. C.) 29 Fed. 295..... 345
McKnight v. U. S., 130 Fed. 659, 670, 65 C. C. A. 37..... 250
McMaster v. Insurance Co., 183 U. S. 25, 40, 22 Sup. Ct. 10, 46 L. Ed. 64..... 441
McMillan v. Spider, etc., Co., 115 Wis. 332, 91 N. W. 979, 60 L. R. A. 589, 95 Am. St. Rep. 947..... 285
McMullen v. Hoffman, 174 U. S. 639, 19 Sup. Ct. 839, 43 L. Ed. 1117..... 505
McNamee v. Hunt, 87 Fed. 298, 301, 30 C. C. A. 653, 655..... 460
McNicol v. Insurance Co., 79 C. C. A. 11, 149 Fed. 141..... 442
McPhail v. Williams (D. C.) 41 Fed. 61 613
Madison Square Bank v. Pierce, 137 N. Y. 444, 33 N. E. 557, 20 L. R. A. 335, 33 Am. St. Rep. 751..... 242
Magwire v. Tyler, 8 Wall. (U. S.) 650, 19 L. Ed. 320..... 251
Main, The, L. R. (Prob. 1894) 324..... 237
Main, The, v. Williams, 152 U. S. 131, 132, 14 Sup. Ct. 486, 38 L. Ed. 381...292, 535
Maiorano v. Railroad Co., 65 Atl. 1077, 216 Pa. 402..... 285
Mallow v. Hinde, 12 Wheat. 197, 6 L. Ed. 599 544

Page

Mandeville v. Welch, 5 Wheat. (U. S.) 277, 288, 5 L. Ed. 87..... 388
Maria Martin, The, 12 Wall. 31, 40, 20 L. Ed. 251 453
Maricopa & Phenix R. R. v. Arizona, 156 U. S. 347, 351, 15 Sup. Ct. 391, 39 L. Ed. 447 572
Marie Martin, The, 12 Wall. 31, 47, 20 L. Ed. 251..... 278
Marshall v. Holmes, 141 U. S. 589, 12 Sup. Ct. 62, 35 L. Ed. 870.....603, 604
Martin v. Criscuola, 10 Blatch. 211, Fed. Cas. No. 9,169..... 666
Martin v. Insurance Co., 57 N. J. Law, 623, 31 Atl. 213..... 148
Martineau v. Kitching, Law Rep. 7 Q. B. 436, 449..... 468
Marx v. Steamship Co. (D. C.) 22 Fed. 680 .....630, 633
Maryland Steel Co. v. Marney, 46 Atl. 1077, 91 Md. 360..... 605
Mason, etc., R. Co. v. Yockey, 103 Fed. 265, 43 C. C. A. 228..... 581
Masonic Ass'n v. Shyock, 73 Fed. 774, 20 C. C. A. 3..... 656
Matteson v. Dent, 176 U. S. 521, 20 Sup. Ct. 419, 44 L. Ed. 571..... 570
Matthews v. Matthews, 133 N. Y. 679, 31 N. E. 519..... 324
Mauran v. Bullus, 16 Pet. 528, 10 L. Ed. 1056 244
Mayor v. Johnson, 84 Ga. 279, 10 S. E. 719 558
Meehan v. Nelson, 137 Fed. 731, 70 C. C. A. 165 598
Meighan, Matter of, 182 N. Y. 558, 75 N. E. 1131; 106 App. Div. 599, 94 N. Y. Supp. 1153 126
Mellus v. Thompson, 1 Cliff (U. S.) 125, Fed. Cas. No. 9,405..... 271
Mexia v. Oliver, 148 U. S. 664, 673, 13 Sup. Ct. 754, 37 L. Ed. 602..... 451
Meyers v. Block, 120 U. S. 213, 7 Sup. Ct. 525, 30 L. Ed. 642..... 245
Miami, The (D. C.) 87 Fed. 757..... 672
Michigan Cent. R. Co. v. Boyd, 91 Ill. 268 634
Milkman v. Ordway, 106 Mass. 232..... 324
Miller v. Insurance Co., 12 Wall. 285, 300, 20 L. Ed. 398 451
Miller v. O'Brien (D. C.) 35 Fed. 779.... 613
Miller v. Process Co., 109 App. Div. 135, 95 N. Y. Supp. 1020..... 514
Miller v. Railroad Co., 55 Fed. 366, 372, 5 C. C. A. 134, 139..... 675
Miller v. U. S. (C. C.) 128 Fed. 469..... 44
Mills v. Bank, 11 Wheat. 431, 436, 6 L. Ed. 512..... 660
Milroy v. Spurr, etc., Co, 43 Mich. 231, 5 N. W. 287..... 388
Milwaukee R. Co. v. Kellogg, 94 U. S. 469, 475, 24 L. Ed. 256..... 651
Minis v. U. S., 15 Pet. 445, 10 L. Ed. 791 616
Minneapolis v. Lundin, 7 C. C. A. 344, 58 Fed. 525..... 672
Minneapolis, etc., R. Co. v. Rolling Mill, 119 U. S. 149, 7 Sup. Ct. 168, 30 L. Ed. 376..... 442
Minnesota Lumber Co. v. Coal Co., 160 Ill. 85, 43 N. E. 774, 31 L. R. A. 529.... 595

Digitized by Google

Page

Minnesota v. Securities Co., 184 U. S. 199, 22 Sup. Ct. 308, 46 L. Ed. 499..... 231
Minturn v. Insurance Co., 84 Mass. 86.. 239
Minturn v. Maynard, 17 How. 477, 15 L. Ed. 235..... 143
Mississippi & M. R. R. Co. v. Cromwell, 91 U. S. 643, 23 L. Ed. 367..... 324
Missouri Pac. R. Co. v. Beeson, 30 Kan. 298, 2 Pac. 496..... 634
Missouri Pac. R. Co. v. Railroad Co., 132 U. S. 191, 10 Sup. Ct. 65, 33 L. Ed. 309 666
Mitchell v. Smith, 1 Bin. (Pa.) 110, 2 Am. Dec. 417..... 504
Mobile & M. R. Co. v. Jurey, 111 U. S. 584, 4 Sup. Ct. 566, 28 L. Ed. 527..... 633
Moit v. Railroad Co., 153 Fed. 354, 82 C. C. A. 430..... 592
Monte Allegre, The, 9 Wheat (U. S.) 616, 645, 6 L. Ed. 174..... 218
Montgomery v. U. S., 162 U. S. 410, 16 Sup. Ct. 797, 40 L. Ed. 1020..... 480
Moore v. Bowmen, 47 N. H. 494, 500.... 575
Moores v. Bank, 104 U. S. 625, 630, 26 L. Ed. 870..... 451
Moran, Ex parte, 75 C. C. A. 396, 405, 144 Fed. 594, 603..... 572
Moren v. Com., 76 S. W. 1090, 116 Ky. 859 636
Morgan Envelope Co. v. Paper Co., 152 U. S. 425, 14 Sup. Ct. 627, 38 L. Ed. 500.... 171
Morier v. Railroad Co., 31 Minn. 351, 17 N. W. 952, 47 Am. Rep. 793..... 623
Morris v. Morris, 5 Mich. 171..... 267
Morrisey, In re, 137 U. S. 157, 11 Sup. Ct. 57, 34 L. Ed. 644..... 421
Morrison v. Watson, 154 U. S. 111, 14 Sup. Ct. 995, 38 L. Ed. 927..... 265
Morton v. Robards, 4 Dana (Ky.) 258.... 269
Moses Taylor, The, 4 Wall. 411, 18 L. Ed. 397 140
Moulor v. Insurance Co., 111 U. S. 335, 341, 4 Sup. Ct. 466, 28 L. Ed. 447..... 441
Moylon v. McDonald, 188 Mass. 499, 74 N. E. 929..... 582
Mueller v. Nugent, 184 U. S. 1, 22 Sup. Ct. 269, 46 L. Ed. 405..... 305
Mulhall v. Fallon, 176 Mass. 266, 57 N. E. 386, 54 L. R. A. 934, 79 Am. St. Rep. 309 235
Munro v. Callahan, 75 N. W. 151, 55 Neb. 75, 70 Am. St. Rep. 366..... 606
Muser v. Magone, 155 U. S. 240, 15 Sup. Ct. 77, 39 L. Ed. 135..... 464
Mutual Life Ins. Co. v. Conoley, 63 Fed. 180, 11 C. C. A. 116..... 161
Myers v. Hettinger, 37 C. C. A. 369, 370, 94 Fed. 370, 371..... 538

Narramore v. Railroad Co., 96 Fed. 298, 37 C. C. A. 499, 48 L. R. A. 68..... 580
Nash v. Classon, 45 N. E. 276, 277, 163 Ill. 409..... 460
National Bank v. Insurance Co., 95 U. S. 673, 24 L. Ed. 563..... 441
National Bank of Boyertown v. Schufelt, 76 C. C. A. 187, 145 Fed. 509..... 325
National Bunching Co. v. Williams, 44 Fed. 190, 194, 12 L. R. A. 107..... 426
National Const. Co. v. Insurance Co., 176 Mass. 121, 57 N. E. 350..... 461

Page

National Enameling Co., Ex parte, 201 U. S. 162, 26 Sup. Ct. 404, 50 L. Ed. 707.. 428
National Exch. Bank v. McLoon, 73 Me. 498, 40 Am. Rep. 388..... 389
National Steel Co. v. Lowe, 127 Fed. 311, 62 C. C. A. 229..... 582
National Surety Co. v. Long, 125 Fed. 887, 60 C. C. A. 623.....438, 447, 461
Nations v. Johnson, 24 How. 204, 16 L. Ed. 628..... 275
Neagle, In re, 135 U. S. 1, 42, 10 Sup. Ct. 658, 34 L. Ed. 55..... 421
Nebo, The (D. C.) 40 Fed. 31..... 39
N. Erlanger, Blumgart & Co. v. U. S., 152 Fed. 576..... 465
Nettie L. Tice, The (D. C.) 110 Fed. 461 154
New England Waterworks Co. v. Trust Co., 136 Fed. 521, 69 C. C. A. 297..... 211
Newport News, etc., Co. v. Pace, 158 U. S. 36, 15 Sup. Ct. 743, 39 L. Ed. 887.... 325
Niobe, The, 13 P. D. 556 (1891) App. Cas. 401 154
Nisbit v. Macon B. & T. Co. (C. C.) 12 Fed. 686..... 83
Northern Pac. R. Co. v. Jones, 144 Fed. 47, 75 C. C. A. 205.....30, 624, 625
Northern Pac. R. Co. v. Tynan, 119 Fed. 288, 56 C. C. A. 192..... 303
Northern Securities Co. v. U. S., 193 U. S. 197, 24 Sup. Ct. 436, 48 L. Ed. 679.. 340
Northern, etc., R. Co. v. Railroad Co., 15 How. 233, 244-246, 14 L. Ed. 674..... 544
Northfield, The, 154 U. S. 629, 14 Sup. Ct. 1184, 24 L. Ed. 680.....278, 283
North Penn. R. Co. v. Bank, 123 U. S. 727, 733, 8 Sup. Ct. 266, 31 L. Ed. 287.. 656
Northwestern Life Ins. Co. v. Stevens, 18 C. C. A. 107, 112, 71 Fed. 258, 263.. 455
Nugent v. Railroad Co., 61 N. Y. Supp. 476, 46 App. Div. 105..... 606

O'Connell v. Reed, 5 C. C. A. 586, 592, 56 Fed. 531, 536..... 666
O'Donnell v. Smith, 142 Mass. 505, 8 N. E. 350 72
Ogden v. Madison, 111 Wis. 413, 87 N. W. 568, 55 L. R. A. 506..... 637
Ogden v. U. S., 112 Fed. 523, 526, 50 C. C. A. 380.....316, 317
Ogden City v. Weaver, 108 Fed. 564, 568, 47 C. C. A. 485..... 114
Ogg v. Shuter, Law Rep. 10 C. P. 159-162 469
Olsen v. The Scotland (D. C.) 42 Fed. 925 183
One Pearl Chain v. U. S. (Dullas) 123 Fed. 374, 59 C. C. A. 499..... 477
Ontario Bank v. Petrie, 3 Wend. 457.... 660
Oregon, The, 158 U. S. 186, 197, 204, 15 Sup. Ct. 804, 809, 39 L. Ed. 943..... 517
Oriental S. S. Co. v. Tylor (1893) 22 Q. B. 515..... 235
Orton v. Smith, 18 How. 263, 15 L. Ed. 393 115
Oscanyan v. Winchester Arms Co., 103 U. S. 261, 277, 26 L. Ed. 539..... 209
Osceola, The, 189 U. S. 158, 23 Sup. Ct. 483, 47 L. Ed. 760..... 533
Otis v. Adams, 27 Atl. 1092, 56 N. J. Law, 38 388

Digitized by Google

Page

Owens v. Henry, 161 U. S. 642, 16 Sup. Ct. 693, 40 L. Ed. 837 665
Owens v. U. S., 130 Fed. 279, 64 C. C. A. 525 643

Pacific Coast Co. v. Reynolds, 114 Fed. 877, 52 C. C. A. 497 292
Palmer v. Stevens, 15 Gray (Mass.) 243 .. 389
Parker, Ex parte, 29 S. W. 480, 35 Tex. Cr. R. 12 98
Parker & Co. v. Moore, 115 Fed. 799, 53 C. C. A. 369 328
Parsons v. Bedford, 3 Pet. 433, 446, 448, 7 L. Ed. 732 451
Parsons v. Railroad Co., 1 Hughes, 279, Fed. Cas. No. 10,776 219
Parsons, Rich & Co. v. Lane, 106 N. W. 485, 97 Minn. 98 149
Paschal, In re, 10 Wall. 483, 495, 19 L. Ed. 992 ..... 109, 125
Passavant v. U. S., 148 U. S. 214, 13 Sup. Ct. 572, 37 L. Ed. 426 464
Patterson v. Kentucky, 97 U. S. 501, 24 L. Ed. 1115 339
Patton v. Railroad Co., 179 U. S. 658, 660, 21 Sup. Ct. 275, 45 L. Ed. 361 460
Pauly, etc., Mfg. Co. v. Hemphill Co., 10 C. C. A. 595, 600, 62 Fed. 698, 703 453
Payne v. Hook, 7 Wall. 425, 19 L. Ed. 260 358
Peabody v. Satterlee, 166 N. Y. 174, 59 N. E. 818, 52 L. R. A. 956 99
Pease v. Ditto, 189 Ill. 456, 468, 59 N. E. 963 491
Peck v. Heurich, 167 U. S. 624, 629, 17 Sup. Ct. 927, 42 L. Ed. 302 ..... 451, 453
Peeler v. Lathrop, 1 C. C. A. 93, 98, 48 Fed. 780, 786 522
Pennoyer v. Neff, 95 U. S. 714, 727, 24 L. Ed. 565 ..... 218, 662, 665
Pennsylvania R. Co. v. Martin, 111 Fed. 586, 49 C. C. A. 474, 55 L. R. A. 361 .. 29, 656
People v. Bliven, 112 N. Y. 79, 19 N. E. 638, 8 Am. St. Rep. 701 638
People v. Campbell, 40 Cal. 129 638
People v. Chapman, 62 Mich. 280, 28 N. W. 806, 4 Am. St. Rep. 857 638
People v. Erwin, 4 Denio (N. Y.) 129 639
People v. Outeveras, 48 Cal. 19 638
People v. Perriman, 72 Mich. 184, 40 N. W. 425 303
People v. Remington, 121 N. Y. 329, 24 N. E. 793, 8 L. R. A. 458 242
People v. Rozelle, 78 Cal. 84, 20 Pac. 36 .. 638
People v. Security Co., 78 N. Y. 125, 34 Am. Rep. 522 335
Peri v. Railroad Co., 152 N. Y. 521, 46 N. E. 849 ..... 110, 125
Perkins v. Insurance & B. Co., 76 Mass. 312, 71 Am. Dec. 654 182
Perkins v. Mettler, 126 Cal. 100, 58 Pac. 384 26
Peshtigo, The (C. C.) 25 Fed. 488 154
Peterson v. The Chandos (D. C.) 4 Fed. 645 183
Peugh v. Porter, 112 U. S. 737, 742, 5 Sup. Ct. 361, 28 L. Ed. 859 389
Pewabic Min. Co. v. Mason, 145 U. S. 349, 367, 12 Sup. Ct. 887, 36 L. Ed. 722 ..... 397, 398

Page

Philp v. Nock, 17 Wall. (U. S.) 460, 21 L. Ed. 679 162
Philpott v. Railroad Co., 85 Mo. 164 285
Pico v. Cohn, 91 Cal. 129, 25 Pac. 970; 27 Pac. 537, 13 L. R. A. 836, 25 Am. St. Rep. 159 605
Pilot Boy, The, 53 C. C. A. 329, 115 Fed. 873 17
Pine Forest, The (D. C.) 119 Fed. 999; 129 Fed. 700, 64 C. C. A. 228, 1 L. R. A. (N. S.) 873 ..... 293, 294
Pittsburgh Const. Co. v. Railroad Co. (C. C.) 151 Fed. 125 502
Pittsburgh, etc., Co. v. Naylor, 73 Ohio St. 115, 76 N. E. 505, 112 Am. St. Rep. 701, 3 L. R. A. (N. S.) 473 285
Plath v. Ass'n, 23 Minn. 479, 23 Am. Rep. 697 149
Platter v. Seymour, 86 Ind. 323 205
Pleasants v. Fant, 22 Wall. 116, 22 L. Ed. 780 ..... 622, 656
Plummer v. Webb, 4 Mason, 380, Fed. Cas. No 11,233 143
Pocahontas Collieries Co. v. Rukas' Adm'r, 51 S. E. 449, 104 Va. 278 285
Poole v. Belcha, 131 N. Y. 200, 30 N. E. 53 110
Pope Mfg. Co. v. Gormully, 144 U. S. 224, 234, 236, 12 Sup. Ct. 632, 637, 36 L. Ed. 414 ..... 323, 341
Port Blakeley Mill Co. v. Sharkey, 102 Fed. 259, 42 C. C. A. 329 633
Pouilin v. Railroad Co. (C. C.) 47 Fed. 858 596
Powell v. Daily, 163 Ill. 646, 45 N. E. 414 123
Powers v. U. S., 119 Fed. 562, 56 C. C. A. 128 575
P. P. Mast & Co. v. Drill Co., 115 Fed. 886, 53 C. C. A. 36 158
Priscilla, The, 114 Fed. 836, 52 C. C. A. 470 141
Pritchard v. Askew, 80 N. C. 86 398
Pullman's Palace Car Co. v. Transportation Co. (C. C.) 71 Fed. 809 428
Purvine, In re, 96 Fed. 192, 37 C. C. A. 446 305
Putnam v. Story, 132 Mass. 205, 210 389
Pyke v. Jamestown (N. D.) 107 N. W. 359 556

Queen of the Pacific, The, 180 U. S. 49, 21 Sup. Ct. 278, 45 L. Ed. 419 629
Quinlan v. Pew, 56 Fed. 111, 5 C. C. A. 438 615
Quinton v. Neville, 81 C. C. A. 673, 152 Fed. 879 ..... 253, 275

Railroad Co. v. Baugh, 149 U. S. 368, 383, 13 Sup. Ct. 914, 920, 37 L. Ed. 772 ..... 671, 672
Railroad Co. v. Blessing, 14 C. C. A. 394, 398, 67 Fed. 277, 281 455
Railroad Co. v. Cummings, 106 U. S. 700, 27 L. Ed. 266 583
Railroad Co. v. Ellis, 4 C. C. A. 454, 456, 54 Fed. 481, 483 459
Railroad Co. v. Farr, 6 C. C. A. 211, 216, 217, 56 Fed. 994, 1000 462

Digitized by Google

Page

Railroad Co. v. Fleming, 14 Lea (Tenn.) 128 651
Railroad Co. v. Fraloff, 100 U. S. 24, 31, 25 L. Ed. 531..... 451
Railroad Co. v. Hennessy, 96 Fed. 713... 580
Railroad Co. v. Holloway, 52 C. C. A. 260, 114 Fed. 458..... 451
Railroad Co. v. Horst, 93 U. S. 291, 300, 23 L. Ed. 898..... 666
Railroad Co. v. Houston, 95 U. S. 703, 24 L. Ed. 542..... 455
Railroad Co. v. Ives, 144 U. S. 408, 417, 12 Sup. Ct. 679, 36 L. Ed. 485..... 459
Railroad Co. v. Jarvi, 3 C. C. A. 433, 437, 438, 53 Fed. 65, 69..... 459
Railroad Co. v. Kelley's Adm'rs, 3 C. C. A. 589, 593, 53 Fed. 459, 463..... 459
Railroad Co. v. McClurg, 8 C. C. A. 322, 325, 326, 59 Fed. 860, 863..... 451
Railroad Co. v. Needham, 3 C. C. A. 129, 147, 52 Fed. 371, 377..... 462
Railroad Co. v. O'Brien, 119 U. S. 99, 103, 7 Sup. Ct. 118, 30 L. Ed. 299.... 451
Railroad Co. v. O'Reilly, 158 U. S. 334, 337, 15 Sup. Ct. 830, 39 L. Ed. 1006.... 451
Railroad Co. v. Pugh, 95 Tenn. 419, 32 S. W. 311..... 593
Railroad Co. v. Ramsey, 22 Wall. 322, 328, 22 L. Ed. 823..... 538
Railroad Co. v. Wade, 35 South. 863, 46 Fla. 197..... 624
Randall v. Railroad Co., 109 U. S. 478, 3 Sup. Ct. 322, 27 L. Ed. 1003..... 622
Rankin v. Insurance & Trust Co., 189 U. S. 242, 253, 23 Sup. Ct. 553, 557, 47 L. Ed. 792.....460, 570
Ransom v. Mack, 2 Hill (N. Y.) 587, 38 Am. Dec. 602.....660, 659
Reed v. Moore & McFerrin, 153 Fed. 358 580
Reese, In re (C. C.) 98 Fed. 984, 986.... 219
Renlund v. Mining Co., 89 Minn. 41, 93 N. W. 1057, 99 Am. St. Rep. 534..... 285
Republic, The, 61 Fed. 109, 9 C. C. A. 386 613
Reynolds v. McCormick, 62 Ill. 412, 415.. 491
Rhine v. Morris, 96 Ind. 81..... 205
Rhode Island Locomotive Works v. Trust Co., 108 Fed. 5, 9, 47 C. C. A. 147..... 163
Ribon v. Railroad Co., 16 Wall. (U. S.) 446, 450, 21 L. Ed. 367..... 390
Rice v. Ames, 180 U. S. 371, 21 Sup. Ct. 406, 45 L. Ed. 577..... 421
Rice v. Deposit Co., 103 Fed. 427, 433, 435, 43 C. C. A. 270, 276, 278.....447, 524
Rice v. Libbey (C. C.) 85 Fed. 821.... 119
Richardson v. Boston, 19 How. 263, 270, 15 L. Ed. 639..... 460
Richardson v. White, 167 Mass. 58, 60, 44 N. E. 1072..... 389
Richmond v. Irons, 121 U. S. 27, 58, 7 Sup. Ct. 788, 30 L. Ed. 864..... 570
Righter v. Forester, 1 Bush. (Ky.) 278.. 269
Riley v. Railroad Co., 133 Fed. 904, 66 C. C. A. 598..... 580
Ripley v. Insurance Co., 30 N. Y. 136, 86 Am. Dec. 362..... 98
Ripon Knitting Works v. Schreiber (D. C.) 101 Fed. 810..... 305
Robert R. Kirkland, The, 143 Fed. 610.. 46

Page

Roberts v. Bonaparte, 20 Atl. 918, 73 Md. 191, 10 L. R. A. 689..... 460
Robertson v. Perkins, 129 U. S. 233, 9 Sup. Ct. 279, 32 L. Ed. 686..... 198
Robinson v. Forrest, 29 Cal. 217..... 251
Robinson v. Insurance Co., 1 Metc. (Mass.) 143 239
Rochester Bank v. Gould, 9 Wend. 280.. 661
Rochester German Ins. Co. v. Peaslee Gaulbert Co., 87 S. W. 1115, 27 Ky. Law Rep. 1155, 1 L. R. A. (N. S.) 364 99
Rodocanachi Sons & Co. v. Milburn Bros., 6 Asp. 100, 103..... 209
Rogers v. Mining Co., 154 Fed. 606, 83 C. C. A. 380..... 394
Rogers v. Railroad Co., 136 Fed. 573, 69 C. C A. 321..... 593
Romano v. Capital, etc., Co., 125 Iowa, 591, 101 N. W. 437, 68 L. R. A. 132, 106 Am. St. Rep. 323..... 285
Root v. Railroad Co., 105 U. S. 193, 26 L. Ed. 975..... 176
Rosencranz v. U. S., 155 Fed. 38, 83 C. C. A. 634..... 645
Ross Case, 112 U. S. 377, 5 Sup. Ct. 184, 28 L. Ed. 787..... 413
Ross v. Scott, 15 Lea (Tenn.) 479..... 575
Ross v. Wood, 70 N. Y. 9..... 605
Rothfeld, In re, G. A. 3,291 (T. D. 16,646) 464
Royal Ins. Co. v. Martin, 192 U. S. 149, 162, 24 Sup. Ct. 247, 48 L. Ed. 385.... 441
Royal Trust Co. v. Railroad Co., 139 Fed. 865, 867, 71 C. C. A. 579..... 218
Rubber Co. v. Goodyear, 9 Wall. 788, 793, 19 L. Ed. 566..... 345
Rubber Tire Wheel Co. v. Rubber Works Co., 154 Fed. 358.....349, 350
Rubber Tire Wheel Co. v. Rubber Co., 23 Sup. Ct. 342, 187 U. S. 641, 47 L. Ed. 345..... 338
Rubber Tire Wheel Co. v. Wheel Co., 91 Fed. 978 338
Rumford Chemical Works v. Baking Powder Co., 125 Fed. 231; 134 Fed. 385, 67 C. C. A. 367..... 178
Rumford Chemical Works v. Chemical Co. (C. C.) 148 Fed. 866..... 172
Rumsey & Sikemeier Co. v. Mfg. Co. (D. C.) 99 Fed. 699..... 551
Rupp-Wittgenfeld Co. v. Elliott, 131 Fed. 730, 65 C. C. A. 544.....340, 345
Russell v. Ferguson, 9 Martin, 647.... 388

St. Gothard, The, 149 Fed. 790..... 37
St. Jago de Cuba, The, 9 Wheat. 409, 6 L. Ed. 122..... 611
St. Louis S. W. R. Co. v. Harvey, 144 Fed. 806, 75 C. C. A. 536..... 623
St. Louis S. W. R. Co. v. Wainwright, 82 C. C. A. 16, 152 Fed. 624..... 325
St. Louis & S. F. R. Co. v. Chapman, 140 Fed. 129, 71 C. C. A. 523.....30, 33
St. Louis & S. F. R. Co. v. James, 161 U. S. 545, 554, 16 Sup. Ct. 621, 40 L. Ed. 802 539
Salmon v. Bennett, 1 Conn. 525, 547-549, 7 Am. Dec. 237..... 549

Digitized by Google

Page
Sanborn v. Leavitt, 43 N. H. 473..... 530
Sayre v. Scott, 55 Fed. 971, 5 C. C. A. 366 167
Scheffer v. Railroad Co., 105 U. S. 249, 26 L. Ed. 1070..... 651
Schofield v. Railroad Co., 114 U. S. 615, 5 Sup. Ct. 1125, 29 L. Ed. 224.... 631
School Dist. v. Chapman, 82 C. C. A. 35, 152 Fed. 887..... 325
Schueler v. Mueller, 193 Ill. 402, 404, 61 N. E. 1044..... 491
Schwabacker v. Reilly, 2 Dill. 127, Fed. Cas. No. 12,501..... 666
Scotland, The, 105 U. S. 24, 26 L. Ed. 1001 611
Scott v. The Ira Chaffee (D. C.) 2 Fed. 401 141
Scott v. U. S., 172 U. S. 343, 19 Sup. Ct. 209, 43 L. Ed. 471..... 480
Scully v. Kirkpatrick, 79 Pa. 324, 21 Am. Rep. 62 475
Searles v. Averhoff, 28 Neb. 668, 44 N. W. 872 98
Seeberger v. Hardy, 150 U. S. 420, 14 Sup. Ct. 170, 37 L. Ed. 1129..... 152
Sessions v. Romadka, 145 U. S. 29, 12 Sup. Ct. 799, 36 L. Ed. 609..... 166
Sewell v. Burdick, 10 App. Cas. 74, 105.. 209
Seymour v. Freer, 75 U. S. 202, 203, 206, 207, 213-215, 19 L. Ed. 306..... 377
Shadoans, Adm'r, v. Railroad Co., 82 S. W. 567, 26 Ky. Law Rep. 828..... 622
Shaeffer v. Blair, 149 U. S. 248, 256, 257, 258, 13 Sup. Ct. 856, 37 L. Ed. 721..374, 377
Shankland v. Washington, 5 Pet. (U. S.) 389, 395, 8 L. Ed. 166..... 388
Shepard v. Adams, 168 U. S. 618, 18 Sup. Ct. 214, 42 L. Ed. 602..... 666
Shields v. Barrow, 17 How. 130, 138, 139, 141, 15 L. Ed. 158.....390, 544
Shunk v. Moline, Milburn & Stoddart Co., 147 U. S. 500, 504, 13 Sup. Ct. 416, 37 L. Ed. 255..... 522
Sibbald v. U. S., 12 Pet. 488, 9 L. Ed. 1167 602
Siemens-Halske Electric Co. v. Mfg. Co., 142 Fed. 157, 73 C. C. A. 375..... 348
Sievers, In re (D. C.) 91 Fed. 366..... 551
Simmons v. Swift, 5 B. & C. 857..... 469
Simpson v. Hewn Timber (D. C.) 7 Fed. 243 308
Sioux City Terminal R. & W. Co. v. Trust Co., 82 Fed. 124, 126, 27 C. C. A. 73, 75.....384, 390, 544
Skobis v. Ferge, 78 N. W. 426, 429, 102 Wis. 588..... 389
Smith v. Au Gres Tp., 150 Fed. 257, 80 C. C. A. 145..... 169
Smith v. Black, 115 U. S. 308, 317, 6 Sup. Ct. 50, 29 L. Ed. 398..... 399
Smith v. Bogenschultz, 14 Ky. Law Rep. 305, 20 S. W. 390, 391..... 454
Smith v. Greenhow, 109 U. S. 669, 671, 3 Sup. Ct. 421, 27 L. Ed. 1080..... 522
Smith v. Hopkins, 120 Fed. 921, 57 C. C. A. 193..... 163
Smith v. Iron Works, 165 U. S. 518, 17 Sup. Ct. 407, 41 L. Ed. 810..... 231
Smith v. Lee (C. C.) 77 Fed. 779..... 358

Page
Smith v. Mottley, 150 Fed. 266, 80 C. C. A. 154..... 169
Smith v. Shoemaker, 17 Wall. 630, 639, 21 L. Ed. 717..... 451
Smith v. Whiting, 12 Mass. 6, 7 Am. Dec. 25 661
Smith, etc., Mfg. Co. v. Insurance Co., 171 Mass. 357, 50 N. E. 516..... 461
Snead v. Sellers, 66 Fed. 729, 15 C. C. A. 631..... 571
Snedden v. Harmes, 5 Colo. App. 477, 39 Pac. 68 339
Snyder v. Railroad Co., 60 Mo. 413..... 623
Society v. McElroy, 28 C. C. A. 365, 372, 83 Fed. 631, 640..... 524
Soper v. Railroad Co., 113 Mich. 443, 71 N. W. 853..... 629
Southern Pac. Co. v. Denton, 146 U. S. 202, 13 Sup. Ct. 44, 36 L. Ed. 942..... 667
Southern Pac. Co. v. Maloney, 69 C. C. A. 83, 136 Fed. 171..... 403
Southern R. Co. v. Steel Co., 176 U. S. 257, 259, 296, 20 Sup. Ct. 347, 362, 44 L. Ed. 458..... 407
Southgate v. Railroad Co., 61 Mo. 89..... 420
Spalding v. Mason, 161 U. S. 375-385, 16 Sup. Ct. 592, 40 L. Ed. 738..... 420
Sparks v. Territory, 146 Fed. 371, 373, 76 C. C. A. 594..... 455
Speer v. Com'rs, 32 C. C. A. 101, 105, 88 Fed. 749, 753..... 572
Speer v. Insurance Co., 36 Hun (N. Y.) 324 335
S. S. Osborne, The, 105 U. S. 447, 450, 26 L. Ed. 1065..... 161
Standley v. Roberts, 8 C. C. A. 305, 308, 59 Fed. 836, 839..... 396
Stanton v. Embrey, 93 U. S. 548, 23 L. Ed. 983 114
State v. Boardman, 64 Me. 523..... 648
State v. Braswell, 82 N. C. 693..... 250
State v. Brooks, 92 Mo. 542, 589, 5 S. W. 257, 330..... 303
State v. Butler, 85 Me. 225, 27 Atl. 142.. 250
State v. Calhoun, 72 Iowa, 432, 34 N. W. 194, 2 Am. St. Rep. 252..... 303
State v. Comstock, 46 Iowa, 265..... 638
State v. Duncan, 35 Pac. 117, 7 Wash. 336, 38 Am. St. Rep. 888..... 638
State v. Emory, 79 Mo. 461..... 303
State v. Farlee, 1 N. J. Law (Coxe) 96 428
State v. Geddes, 22 Mont. 68, 55 Pac. 919.. 638
State v. Gifford, 19 Wash. 464, 53 Pac. 709 638
State v. Griffin, 87 Mo. 608, 615..... 303
State v. Hack, 118 Mo. 92, 23 S. W. 1089 250
State v. Hendricks, 15 Mont. 194, 39 Pac. 93, 48 Am. St. Rep. 666..... 648
State v. Jones, 83 N. C. 605, 35 Am. Rep. 586 638
State v. Kent, 62 N. W. 631, 4 N. D. 577, 27 L. R. A. 686..... 633
State v. Nichols, 60 Atl. 763, 27 R. I. 69.. 636
State v. Plant, 32 Atl. 237, 67 Vt. 454, 48 Am. St. Rep. 821..... 647
State v. Rowe, 104 Iowa, 324, 73 N. W. 833 638

Digitized by Google

Page

State v. Steen, 101 N. W. 96, 125 Iowa, 307 648
State v. Steeves, 43 Pac. 947, 29 Or. 85.. 638
Steamship Co. v. Tugman, 106 U. S. 118, 1 Sup. Ct. 58, 27 L. Ed. 87..... 538
Steinbeck v. Mining Co., 81 C. C. A. 441, 152 Fed. 333..... 545
Stephen Morgan, The, 94 U. S. 599, 24 L. Ed. 266 453
Stevens v. People, 67 Ill. 587..... 638
Stewart v. Railroad Co., 168 U. S. 445, 448, 18 Sup. Ct. 105, 42 L. Ed. 537..... 287
Stockslager v. U. S., 116 Fed. 590, 54 C. C. A. 46 601
Stone v. Chisholm, 113 U. S. 302, 5 Sup. Ct. 497, 28 L. Ed. 991..... 118
Straub v. St. Louis, 175 Mo. 413, 75 S. W. 100 558
Strohm v. Railroad Co., 21 Wis. 562, 94 Am. Dec. 564..... 634
Strong v. Smith, 60 Atl. 66, 68 N. J. Eq. 686; 63 Atl. 493, 68 N. J. Eq. 686.... 112
Strowger v. Sample, 44 Kan. 298, 24 Pac. 425 250
Sturm v. Boker, 150 U. S. 312-341, 14 Sup. Ct. 99, 37 L. Ed. 1093..... 420
Suffolk Co. v. Hayden, 3 Wall. (70 U. S.) 315, 318, 18 L. Ed. 76....166, 175, 176, 177
Sumner v. Caswell (D. C.) 20 Fed. 249.. 210
Supreme Council v. Black, 123 Fed. 650, 59 C. C. A. 414..... 335
Supreme Council v. Lippincott, 134 Fed. 824, 67 C. C. A. 650, 69 L. R. A. 803..156, 157
Swann v. Swann (C. C.) 21 Fed. 299.... 209
Swanson v. Railroad Co. (C. C.) 35 Fed. 638 108
Swift v. Brownell, Holmes, 497, Fed. Cas. No. 13,695..... 535
Swift & Co. v. Furness, Withy & Co. (D. C.) 87 Fed. 345..... 631
Syracuse, The, 9 Wall. 672, 19 L. Ed. 783 509
Szymanski v. Blumenthal, 3 Pennewill (Del.) 558, 52 Atl. 347..... 285

Teller v. U. S., 49 C. C. A. 263, 111 Fed. 119 394
Territory v. Guyott, 9 Mont. 46, 22 Pac. 134 637
Tevis v. Wood, 5 Cal. 393..... 660
Texas T. & L. Co. v. Hightower (Tex.) 96 S. W. 1071, 6 L. R. A. (N. S.) 1046.... 98
Texas & Pac. R. Co. v. Cox, 145 U. S. 593, 12 Sup. Ct. 905, 36 L. Ed. 829..... 572
Thiede v. Utah, 159 U. S. 510, 16 Sup. Ct. 62, 40 L. Ed. 237..... 641
Third Nat. Bank, In re (D. C.) 9 Biss. (U. S.) 535, 4 Fed. 775..... 398
Thomas v. Car Co., 149 U. S. 95, 110, 111, 112, 13 Sup. Ct. 824, 831, 37 L. Ed. 663.. 408
Thomas v. Mining Co., 54 Cal. 578..... 388
Thomas v. Quaterman, L. R. 18 Q. B. Div. 1886-87, 685, 696, et seq..... 582
Thompson v. Connell, 31 Or. 231, 48 Pac. 467, 65 Am. St. Rep. 818..... 607
Thompson v. Fairbanks, 196 U. S. 516, 25 Sup. Ct. 306, 49 L. Ed. 577..... 26
Thomson-Houston, etc., Co. v. Kelsey, etc., Co., 75 Fed. 1005, 22 C. C. A. 1 .....173, 174

Page

Thomson v. Ritchie, 30 Atl. 708, 710, 80 Md. 247..... 398
Thorne v. Insurance Co., 80 Pa. 29, 21 Am. Rep. 89.....504, 505
Tilghman v. Proctor, 125 U. S. 143, 8 Sup. Ct. 894, 31 L. Ed. 664..... 176
Toland v. Sprague, 12 Pet. 300, 325, 9 L. Ed. 1093..... 461
Toledo R. Co. v. Pennsylvania Co., 54 Fed. 736, 19 L. R. A. 387..... 639
Tome v. Dubois, 6 Wall. (U. S.) 548, 554, 18 L. Ed. 943..... 468
Toney v. State, 60 Ala. 97..... 648
Tonge v. Watts, 2 Strange, 1251..... 239
Topliff v. Topliff, 145 U. S. 56, 12 Sup. Ct. 825, 36 L. Ed. 658..... 90
Town of Van Buren v. Wells, 14 S. W. 38, 53 Ark. 368, 22 Am. St. Rep. 214..... 637
Townsend v. Bank, 2 Ohio St. 345, 353, 360 659
Travelers' Ins. Co. v. Melick, 65 Fed. 178, 181, 12 C. C. A. 544, 547, 27 L. R. A. 629 459
Treat Mfg. Co. v. Iron Co., 157 U. S. 675, 15 Sup. Ct. 718, 39 L. Ed. 853..... 656
Tresco, The, 134 Fed. 819, 67 C. C. A. 465 39
Triplett v. Implement Co., 68 Ark. 230, 57 S. W. 261.....26, 27
Trist v. Child, 21 Wall. (U. S.) 441, 447, 22 L. Ed. 623..... 389
Troop, The (D. C.) 118 Fed. 769; 128 Fed. 856, 63 C. C. A. 584..... 184
Trotta's Adm'r v. Johnson, 90 S. W. 540, 28 Ky. Law Rep. 851..... 285
Trull v. Rice, 92 N. C. 572, 574..... 398
Trust Co. v. Hensey, 205 U. S. 298, 27 Sup. Ct. 535, 51 L. Ed. 811..... 265
Tucker, In re, 153 Fed. 91..... 496
Turley v. Bates, 2 H. & C. 200-208..... 469
Turner v. Yates, 16 How. 14, 23, 14 L. Ed. 824 460
Tuttle v. Claflin, 76 Fed. 227, 22 C. C. A. 133 167
Two Hundred and Eighteen and One-half Carats Loose Emeralds v. U. S., 153 Fed. 643..... 476
Twyne's Case, 1 Smith. Lead. Cas. (7th Am. Ed.) 52 25

Umbria, The (D. C.) 148 Fed. 283..... 34
Underwood v. Sledge, 27 Ark. 295, 297... 397
Union Pac. R. Co. v. Field, 137 Fed. 14, 15, 69 C. C. A. 536, 537..... 455
Union Pac. R. Co. v. Myers, 115 U. S. 1, 5 Sup. Ct. 1113, 29 L. Ed. 319..... 572
Union Sawmill Co., In re, 117 La. 643, 42 South. 195 225
U. S. v. Bartram Bros., 131 Fed. 833, 65 C. C. A. 557 137
U. S. v. Beebe, 180 U. S. 343, 21 Sup. Ct. 371, 45 L. Ed. 563..... 604
U. S. v. Birdseye, 137 Fed. 516, 70 C. C. A. 100..... 261
U. S. v. Blackfeather, 155 U. S. 180, 186, 15 Sup. Ct. 64, 39 L. Ed. 114..... 453
U. S. v. China & Japan Co., 71 Fed. 864, 18 C. C. A. 335..... 146
U. S. v. Downing, 146 Fed. 56, 60, 76 C. C. A. 376..... 145

Digitized by Google

Page

U. S. v. Falk, 204 U. S. 143, 149, 150, 27 Sup. Ct. 191, 51 L. Ed. 411..... 473
U. S. v. Gleeson, 90 Fed. 778, 33 C. C. A. 272 604
U. S. v. Godillot & Co., 139 Fed. 1, 71 C. C. A. 505..... 465
U. S. v. Goodrich, 54 Fed. 21, 4 C. C. A. 160 .....161, 394
U. S. v. Hempstead (C. C.) 153 Fed. 483 145
U. S. v. Herrman, 91 Fed. 116, 33 C. C. A. 400.....464, 465
U. S. v. Hoeninghaus, 137 Fed. 478, 69 C. C. A. 626..... 152
U. S. v. Holly, 3 Cranch, C. C. 656, Fed. Cas. No. 15,381..... 637
U. S. v. Hough, 103 U. S. 73, 26 L. Ed. 305 245
U. S. v. Insley, 54 Fed 221, 223, 4 C. C. A. 296, 298..... 665
U. S. v. Kenworthy, 68 Fed. 904, 16 C. C. A. 61..... 464
U. S. v. Lee Yen Tai, 113 Fed. 465, 51 C. C. A. 299..... 163
U. S. v. Lueder (C. C.) 146 Fed. 149.... 131
U. S. v. McIntyre (C. C.) 111 Fed. 590... 245
U. S. v. Mfg. Co., 196 U. S. 573, 25 Sup. Ct. 367, 49 L. Ed. 604..... 251
U. S. v. One Pearl Necklace (Dodge) 111 Fed. 165, 49 C. C. A. 287, 56 L. R. A. 130 477
U. S. v. Passavant, 169 U. S. 16, 18 Sup. Ct. 219, 42 L. Ed. 644..... 464
U. S. v. Pearl Chain (D. C.) 139 Fed. 517, 71 C. C. A. 500..... 477
U. S. v. Snyder (C. C.) 14 Fed. 554..... 639
U. S. v. Stevens (D. C.) 44 Fed. 140..... 639
U. S. v. Tapestry (D. C.) 114 Fed. 496.. 477
U. S. v. Telephone Co., 167 U. S. 224, 17 Sup. Ct. 809, 42 L. Ed. 144.....339, 349
U. S. v. Throckmorton, 98 U. S. 61, 25 L. Ed. 93.....602, 603, 604
U. S. v. Tiffany & Co., 137 Fed. 971; 151 Fed. 473, 81 C. C. A. 11..... 81
U. S. v. Wells, 2 Cranch, C. C. 45, Fed. Cas. No. 16,662..... 637
United States Consol. Seeded Raisin Co. v. Griffin & Skelly Co., 126 Fed. 364, 61 C. C. A. 334.....339, 340
United States Fidelity, etc., Co. v. Rice, 148 Fed. 206, 78 C. C. A. 164...438, 448, 461
United States Freehold Land & Em. Co. v. Gallegos, 89 Fed. 769, 33 C. C. A. 470 572

Valencia, The, 165 U. S. 264, 17 Sup. Ct. 323, 41 L. Ed. 710..... 611
Valley R. Co. v. Keegan, 87 Fed. 849, 31 C. C. A. 255..... 581
Vance v. Burbank, 101 U. S. 514, 25 L. Ed. 929.....602, 603
Vance v. Vandercook Co., 170 U. S. 468, 472, 18 Sup. Ct. 674, 42 L. Ed. 1100..... 522
Vandewater v. Mills, 19 How. 82, 15 L. Ed. 554..... 143
Vaughan v. Northup, 15 Pet. 1, 10 L. Ed. 639 271
Vetaloro v. Perkins (C. C.) 101 Fed. 393.. 288
Victor Talking Mach. Co. v. The Fair, 123 Fed. 424, 61 C. C. A. 58.....340, 345

Page

Victor Talking Mach. Co. v. Graphophone Co. (C. C.) 140 Fed. 860..... 173
Victor Talking Mach. Co. v. Talko Phone Co., 146 Fed. 534; 148 Fed. 1022, 79 C. C. A. 536..... 170
Virginia Com'rs, Ex parte, 112 U. S. 177, 5 Sup. Ct. 421, 28 L. Ed. 691..... 428
Vogel v. Warsing, 146 Fed. 949, 77 C. C. A. 199..... 321
Von Hartz, In re, 142 Fed. 726, 74 C. C. A. 58..... 68

Wabash R. Co. v. Brown, 152 Ill. 484, 39 N. E. 273.....629, 630
Wabash Western R. Co. v. Brow, 164 U. S. 271, 17 Sup. Ct. 126, 41 L. Ed. 431.... 529
Wagstaf v. Anderson, 5 C. P. Div. 171, 177 209
Wallace B. Flint, The, 130 Fed. 339, 64 C. C. A. 584..... 144
Wanamaker v. Cooper (C. C.) 69 Fed. 329 464
Ward v. Mfg. Co., 5 C. C. A. 538, 540, 56 Fed. 437, 439..... 538
Ward v. Railroad Co., 158 Mo. 226, 58 S. W. 28..... 629
Ware v. Watson, 7 De Gex, M. & G. 739, 741 398
Warner v. Boyer (D. C.) 74 Fed. 873.... 613
Warren v. Bank, 38 N. E. 122, 125, 140 Ill. 9, 25 L. R. A. 746..... 389
Washington, etc., St. R. Co. v. Hickey, 166 U. S. 521, 17 Sup. Ct. 661, 41 L. Ed. 1101 651
Watch Case Co. v. Express Co., 120 N. C. 351, 27 S. E. 74..... 630
Waterloo Organ Co., In re, 134 Fed. 341, 67 C. C. A. 255; 147 Fed. 814.....482, 483
Watson v. Birch, 2 Ves. Jr. 51, 54..... 398
Watson v. Bonfils, 116 Fed. 157, 53 C. C. A. 535..... 571
Weaver v. Boggs, 38 Md. 255..... 665
Weber v. Supreme Tent Knights of Maccabees, 172 N. Y. 490, 65 N. E. 258, 92 Am. St. Rep. 753..... 336
Weeks v. Scharer, 111 Fed. 330, 335, 49 C. C. A. 372, 377; 129 Fed. 333, 64 C. C. A. 11 .....250, 672
Weinstock v. Bellwood, 75 Ky. 139..... 388
Welle v. Celluloid Co., 175 N. Y. 401, 405, 67 N. E. 609..... 582
Wells v. Alexandre, 130 N. Y. 642, 29 N. E. 142, 15 L. R. A. 218..... 595
West v. Smith, 101 U. S. 263, 270, 25 L. Ed. 809 460
Westbay v. Milligan, 74 Mo. App. 179.... 529
Western Union Tel. Co. v. Railroad Co. (C. C.) 3 Fed. 423, 721..... 345
Westminster, The (D. C.) 102 Fed. 366.. 629
Wetherbee v. Green, 22 Mich. 311, 7 Am. Rep. 653..... 575
Wetmore v. Rymer, 169 U. S. 115, 128, 18 Sup. Ct. 293, 42 L. Ed. 682..... 538
Wheeler v. Train, 3 Pick. (Mass.) 255, 257 491
Whipple v. Fairchild, 139 Mass. 262, 265, 30 N. E. 89..... 389
Whitcomb v. Emerson (D. C.) 50 Fed. 128 ..... 292, 613

Digitized by Google

Page

White v. Dolliver, 113 Mass. 400, 18 Am. Rep. 502 529
Whitener, In re, 105 Fed. 180, 44 C. C. A. 434 305
Whitney v. Huntington, 37 Minn. 197, 33 N. W. 561..... 575
Whitney v. Olsen, 108 Fed. 292, 47 C. C. A. 331 184
Wickliffe v. Buckman, 12 B. Mon. (Ky.) 424 454
Wicks v. McConnell, 102 Ky. 434, 43 S. W. 205 269
Wiggins v. Burkham, 10 Wall. 129, 133, 19 L. Ed. 884..... 461
Wilcox Lumber Co. v. Ritteman, 88 Minn. 18, 92 N. W. 472..... 658
Wilhite v. Skelton, 78 C. C. A. 635, 149 Fed. 67, 71, 72.....386, 387
Willard v. Tayloe, 8 Wall. 567, 19 L. Ed. 501 323
William Branfoot, The (D. C.) 48 Fed. 914 39
William F. Babcock, The (D. C.) 31 Fed. 418 39
Williams, In re (D. C.) 120 Fed. 38; 123 Fed. 321..... 68
Williams v. Bankhead, 19 Wall. (U. S.) 563, 22 L. Ed. 184..... 390
Williams v. Insurance Co., L. R. I. C. P. Div. 757..... 238
Williams v. Neely, 134 Fed. 1, 10, 11, 67 C. C. A. 171, 180, 69 L. R. A. 232....387, 524
Williams v. U. S., 93 Fed. 396, 25 C. C. A. 369..... 642
Williamson v. Dale, 3 Johns. Ch. (N. Y.) 290, 291..... 398

Page

Wilson v. Daniel, 3 Dall. (Pa.) 401, 404, 1 L. Ed. 655..... 522
Windsor v. McVeigh, 93 U. S. 274, 282, 23 L. Ed. 914..... 216
Wisner, Ex parte, 203 U. S. 449, 27 Sup. Ct. 150, 51 L. Ed. 264..... 585
Wolf v. Bollinger, 62 Ill. 368..... 234
Wolkowich v. Mason, 80 C. C. A. 435, 150 Fed. 699, 701..... 498
Wood v. Davis, 18 How. (U. S.) 467, 475, 15 L. Ed. 460..... 384
Wood v. Dummer, 3 Mason (U. S.) 308, 30 Fed. Cas. 435, 438.....390, 391
Wood v. Railroad Co., 118 N. C. 1056, 24 S. E. 704..... 630
Woolstein v. Welch (C. C.) 42 Fed. 566.. 358
Wormley v. Wormley, 8 Wheat. (U. S.) 421, 451, 5 L. Ed. 651..... 384
Wright v. Nutt, 1 T. R. 389..... 664
Wrightman v. Boone Co., 88 Fed. 435, 31 C. C. A. 570..... 668
Wynn v. Alden, 4 Denio (N. Y.) 163..... 660

York Mfg. Co. v. Cassell, 201 U. S. 344, 26 Sup. Ct. 481, 50 L. Ed. 782.....26, 27, 269
Young v. Grundy, 6 Cranch, 51, 3 L. Ed. 149 267
Young v. Heermans, 66 N. Y. 374, 381.. 549
Youngs v. Lee, 12 N. Y. 551..... 661
Young v. Matthews, Law Rep. 2 C. P. 127-129 469

Zeiger v. Railroad Co. (C. C.) 151 Fed. 348 286

Digitized by Google

CASES PASSED UPON.

CASES IN THE UNITED STATES CIRCUIT COURTS OF APPEALS WHICH HAVE BEEN PASSED UPON BY THE SUPREME COURT OF THE UNITED STATES.

Bowen v. Chapman.....80 C. C. A. 60
Appeal. Dismissed, November 11, 1907. 28 Sup. Ct. 32, 207 U. S. 89, 52 L. Ed. —.

Chicago Title & Trust Co., In re.....77 C. C. A. 408
Writ of Error. Judgment reversed, October 28, 1907. 28 Sup. Ct. 23, 207 U. S. 61, 52 L. Ed. —.

McCoy, In re.....80 C. C. A. 60
Appeal. Dismissed, November 11, 1907. 28 Sup. Ct. 32. 207 U. S. 89, 52 L. Ed. —.

Taylor v. United States.....81 C. C. A. 197
Writ of Certiorari. Judgment reversed, November 18, 1907. 28 Sup. Ct. 53, 52 L. Ed. —.

United States Min. Co. v. Lawson.....67 C. C. A. 587
Writ of Certiorari. Decree affirmed, October 21, 1907. 28 Sup. Ct. 15, 207 U. S. 1, 52 L. Ed. —.

Digitized by Google

Digitized by Google

INDEX TO NOTES.

VOLUMES 1-83.

ABANDONMENT.
Of trade-marks and trade-names. 33 C. C. A. 294.
Of railroad right of way. 42 C. C. A. 576.
Of water rights. 45 C. C. A. 190.
Of copyright. 69 C. C. A. 563.
Of invention. 70 C. C. A. 6.

ABATEMENT AND REVIVAL.
Pendency of action in state or federal court as ground for abatement of action in the other. 47 C. C. A. 205; 73 C. C. A. 521.

ACCIDENT INSURANCE.
Risks and causes of loss. 38 C. C. A. 3.

ACTIONS.
Jurisdiction of federal courts as restricted by state laws. 1 C. C. A. 514.
On insurance policy—Time of bringing suit. 2 C. C. A. 473; 35 C. C. A. 404.
Forms of action in federal courts—Following state practice. 5 C. C. A. 598.
Limitation of actions against corporate officers. 53 C. C. A. 7.
By and against receivers and "agents" of national banks. 53 C. C. A. 398.
Bar of action as determined by limitations of state other than that in which action is brought. 58 C. C. A. 186.
Satisfaction of one or more judgments for same cause of action. 67 C. C. A. 322.
Premature commencement of actions. 76 C. C. A. 159.

ADMIRALTY.
Nature of hearing on appeal—Admission of new proof. 3 C. C. A. 322.
Demurrage. 14 C. C. A. 657; 21 C. C. A. 337; 46 C. C. A. 4.
Extinguishment of maritime liens. 17 C. C. A. 102.
Jurisdiction as to matters of contract. 18 C. C. A. 347; 27 C. C. A. 530.
General average. 20 C. C. A. 357.
Jurisdiction to enforce liens under state laws. 21 C. C. A. 21.
Collision rules. 28 C. C. A. 532; 29 C. C. A. 368.
Salvage awards. 30 C. C. A. 280.
Signals of meeting vessels. 30 C. C. A. 630.
Negligence of both master and servant—Division of damages. 30 C. C. A. 678.

ADMIRALTY—Cont'd.
Jurisdiction of suits between foreigners. 37 C. C. A. 193.
Limitation of shipowner's liability. 45 C. C. A. 387.
Statutory exemptions of shipowners from liability. 49 C. C. A. 11.
Demise of vessel. 55 C. C. A. 225.
Collision—Overtaking vessels. 60 C. C. A. 254.
Jurisdiction of torts. 62 C. C. A. 279.
Liability of vessel for injuries caused by creation of swell. 78 C. C. A. 3.

ADVERSE POSSESSION.
Tax deed as color of title. 24 C. C. A. 402.
Acquisition or loss of right to railroad right of way by prescription. 63 C. C. A. 7.

ALIENS.
Citizenship under state and federal laws. 6 C. C. A. 37.
Citizenship of the Chinese. 1 C. C. A. 212; 35 C. C. A. 332.
Citizenship of married women. 65 C. C. A. 5.
Importation of contract labor. 66 C. C. A. 133.

ALTERATION OF INSTRUMENTS.
Discharge of surety by. 66 C. C. A. 6.

APPEAL.
In admiralty—New proofs. 3 C. C. A. 322.
Review of previous decisions as to validity of patents in circuit court of appeals. 3 C. C. A. 565; 27 C. C. A. 427; 32 C. C. A. 484.
Review of interlocutory decree granting or refusing injunction in patent case in circuit court of appeals. 3 C. C. A. 572; 27 C. C. A. 189; 32 C. C. A. 484.
When may be aided by mandamus. 10 C. C. A. 450.
Following state practice. 27 C. C. A. 394.
Finality of judgments and decrees for purposes of review. 2 C. C. A. 379; 17 C. C. A. 238; 28 C. C. A. 482.
Appeal and review in bankruptcy cases. 43 C. C. A. 9.
Appeal or mandamus. 47 C. C. A. 376.
Reduction or increase of amount of recovery on appeal. 48 C. C. A. 470.

Digitized by Google

APPEAL—Cont'd.
Additional proofs in appellate court without trial de novo. 67 C. C. A. 600.
Jurisdiction of lower court to rehear cause or grant new trial after remand by appellate court. 70 C. C. A. 416.
Enforcement of decree of appellate court by mandamus. 77 C. C. A. 409.
Amendment of writ of error, citation, or notice of proceedings for review. 77 C. C. A. 490.

APPEARANCE.
Following state practice. 5 C. C. A. 594.

ARBITRATION AND AWARD.
Arbitration as a condition of an insurance policy. 9 C. C. A. 628; 39 C. C. A. 389.
Setting aside an award for interest, prejudice, or misconduct of arbitrator. 12 C. C. A. 592.

ARGUMENTS.
Of counsel upon failure to produce witness. 13 C. C. A. 589.

ASSAULT AND BATTERY.
Mental suffering as element of damages. 11 C. C. A. 561.
Liability of corporations. 39 C. C. A. 14.

ASSIGNEES.
Citizenship as affecting the jurisdiction of the federal courts. 10 C. C. A. 254; 27 C. C. A. 302.

ASSIGNMENT.
Of right to use name as trade-mark. 17 C. C. A. 579; 27 C. C. A. 360.
Of claims against the United States and government contracts. 22 C. C. A. 650.
Liability of transferrors and transferees of corporate stock for assessments. 61 C. C. A. 322.
Of licenses for use or sale of patents. 64 C. C. A. 596.
Subrogation of insurer under assignment of rights of insured. 65 C. C. A. 615.

ASSIGNMENT FOR BENEFIT OF CREDITORS.
Power of corporation to make. 24 C. C. A. 221.
Effect of national bankruptcy act on state insolvency laws and on assignments for benefit of creditors. 51 C. C. A. 11.

ASSOCIATIONS.
Who may be parties in actions by or against associations. 82 C. C. A. 270.

ASSUMPTION OF RISK.
Assumption of risk incident to employment. 38 C. C. A. 314.

ATTACHMENT.
Issuance—Following state practice. 5 C. C. A. 606; 27 C. C. A. 393.

ATTORNEY AND CLIENT.
Arguments of counsel. 13 C. C. A. 589.
Bonds, securities, and other papers subject to lien for services. 32 C. C. A. 229.
Liability of attorneys for contempt. 48 C. C. A. 7.
Comments of counsel and instructions on failure of accused to testify. 54 C. C. A. 373.
Authority of attorney after judgment. 67 C. C. A. 130.
Compensation of attorney on premature termination of employment. 69 C. C. A. 113.
Expert testimony as to value of services. 74 C. C. A. 257.

AWARD.
Setting aside for interest, prejudice, or misconduct of arbitrator. 12 C. C. A. 592.

BAGGAGE.
Responsibility of sleeping-car companies for baggage and valuables. 10 C. C. A. 338.
Limitation of liability by carrier for passenger's baggage. 32 C. C. A. 308.

BANKRUPTCY.
Jurisdiction of federal courts in suits relating to bankruptcy. 11 C. C. A. 313.
What persons are subject to bankruptcy law. 42 C. C. A. 4.
Appeal and review in bankruptcy cases. 43 C. C. A. 9.
Franchises and licenses as assets in bankruptcy. 43 C. C. A. 389.
Effect of national bankruptcy act on state insolvency laws and on assignments for benefit of creditors. 51 C. C. A. 11.

BANKS AND BANKING.
Jurisdiction of federal courts in suits against national banks. 11 C. C. A. 315.
Who liable as shareholders in national banks. 15 C. C. A. 130; 46 C. C. A. 503.
Personal liability of directors. 12 C. C. A. 680; 33 C. C. A. 230.
Deposits in bank after insolvency. 43 C. C. A. 588.
Enforcement of statutory liability of stockholders in national banks. 52 C. C. A. 6.
Actions by and against receivers and "agents" of national banks. 53 C. C. A. 398.
Lien of banks on stock. 56 C. C. A. 179.

Digitized by Google

BANKS AND BANKING—Cont'd.
Taxation of bank deposits. 60 C. C. A. 413.
Right to proceeds of collection on insolvency of collecting bank. 69 C. C. A. 333.

BILLS OF LADING.
Perils of the sea. 19 C. C. A. 465.

BOARDS OF TRADE.
Quotations of prices and transactions on exchanges. 61 C. C. A. 2.

BONDS.
Bona fide purchasers of municipal bonds. 41 C. C. A. 6.
Death of surety. 49 C. C. A. 591.
Rights and remedies of holders of invalid municipal securities. 66 C. C. A. 235.

BREACH OF MARRIAGE PROMISE.
Effect of existing marriage on subsequent contract to marry. 50 C. C. A. 583.

BUILDING AND LOAN ASSOCIATIONS.
Statutory exemptions from operation of usury laws. 36 C. C. A. 343.
What law governs usury. 51 C. C. A. 319.

CANCELLATION.
Of patent to public land. 22 C. C. A. 38.
Of certificates of corporate stock. 55 C. C. A. 167.
Cancellation, surrender, or rescission of charter of vessel. 61 C. C. A. 569.

CARRIERS.
Duty to protect passengers from dangerous fellow passengers. 4 C. C. A. 231.
Right to restrain or expel disorderly passenger. 4 C. C. A. 231.
Duties and liabilities of sleeping-car companies. 10 C. C. A. 335; 34 C. C. A. 386.
Liability for injuries caused by negligence or torts of servants. 10 C. C. A. 466; 27 C. C. A. 651.
Duty to stop trains at station. 14 C. C. A. 362.
Quick dispatch—Demurrage. 14 C. C. A. 657; 21 C. C. A. 342.
Contracts other than for carriage. 20 C. C. A. 521.
Who are common carriers of goods. 20 C. C. A. 521.
Liability as warehousemen. 20 C. C. A. 529.
Duty to trespasser on train. 31 C. C. A. 76.
Liabilities to employés of others carried under contract with carrier. 31 C. C. A. 164.
Persons assisting passengers. 31 C. C. A. 164.
Rights of licensee on train. 31 C. C. A. 164.

CARRIERS—Cont'd.
Rights of person traveling on pass. 31 C. C. A. 164; 32 C. C. A. 306.
Burden of proof of negligence where passengers have been injured. 32 C. C. A. 23.
Live stock—Evidence admissible in actions for injuries through negligence or accident. 32 C. C. A. 148.
Limitations of liability for personal injuries to passengers and for baggage. 32 C. C. A. 301.
Continuance of passenger relation. 40 C. C. A. 437.
Liability of railroads or street car companies for ejection of trespassers. 51 C. C. A. 578.
Injuries to railroad passengers while occupying positions other than regular seats. 54 C. C. A. 4.
Use of carriers' premises by hack and cab drivers, hotel runners, etc. 57 C. C. A. 367.
Regulations of charges by carrier for long and short hauls. 60 C. C. A. 542.
Duties and liabilities of carriers as to furnishing facilities for transportation. 61 C. C. A. 414.
Negligence in ejection of persons under disability. 62 C. C. A. 422.
Liabilities of connecting carriers for injuries to passengers. 64 C. C. A. 485.
Relation of carrier to persons carried under contract with their employers. 67 C. C. A. 427.

CERTIFICATES.
Of receivers. 26 C. C. A. 350.
Of corporate stock—Cancellation. 55 C. C. A. 167.

CERTIORARI.
From supreme court. 1 C. C. A. 5.

CHARITIES.
Liabilities of charitable institutions for negligence. 47 C. C. A. 134.

CHARTER.
Implied warranty of seaworthiness. 15 C. C. A. 388; 60 C. C. A. 179.
Cancellation, surrender, or rescission of charter of vessel. 61 C. C. A. 569.

CHATTEL MORTGAGES.
Controlling effect of state decisions in United States courts. 11 C. C. A. 88.

CHILD.
Death of parent by wrongful act—Damages. 1 C. C. A. 34.
Imputed negligence. 34 C. C. A. 4.
Age as affecting contributory negligence. 37 C. C. A. 362.

CHINESE.
Citizenship. 1 C. C. A. 212; 35 C. C. A. 332.

CIRCUIT COURTS.
Review of jurisdiction of circuit courts. 48 C. C. A. 351.

Digitized by Google

CIRCUIT COURTS—Cont'd.
Jurisdiction of, as determined by the amount in controversy. 19 C. C. A. 75; 36 C. C. A. 459.

CIRCUIT COURTS OF APPEALS.
Certiorari from supreme court. 1 C. C. A. 5.
Jurisdiction. 1 C. C. A. 6; 32 C. C. A. 475.
Effect of previous decisions as to validity of patents. 3 C. C. A. 565; 27 C. C. A. 427; 32 C. C. A. 484.
Review of interlocutory decrees in patent cases. 3 C. C. A. 572; 27 C. C. A. 189; 32 C. C. A. 484.
Orders, decrees, and judgments reviewable. 13 C. C. A. 374.
Enjoining proceedings in state courts. 16 C. C. A. 90; 27 C. C. A. 575; 63 C. C. A. 437.
Conflicts of jurisdiction between federal and state courts. 22 C. C. A. 356; 26 C. C. A. 49.
Jurisdiction on habeas corpus. 25 C. C. A. 11.
Review of jurisdiction of circuit courts. 48 C. C. A. 351.

CITIZENSHIP.
Of Chinese. 1 C. C. A. 212; 35 C. C. A. 332.
Of aliens under state and federal laws. 6 C. C. A. 37.
Of corporations. 6 C. C. A. 174; 10 C. C. A. 249; 27 C. C. A. 301.
Diverse citizenship as a ground of federal jurisdiction. 10 C. C. A. 249; 27 C. C. A. 298.
Of married women. 65 C. C. A. 5.

COLLISION.
As a peril of the sea. 19 C. C. A. 468.
Collision rules—Speed of steamers in fog. 28 C. C. A. 532.
Collision rules—Speed of sailing vessels in fog. 29 C. C. A. 368.
Signals of meeting vessels. 30 C. C. A. 630.
Overtaking vessels. 60 C. C. A. 254.

COLOR OF TITLE.
Tax deed as color of title. 24 C. C. A. 402.

COMMERCE.
Taxation of interstate commerce by state. 8 C. C. A. 492.
Jurisdiction of federal courts of suits under interstate commerce act. 11 C. C. A. 318.
State laws interfering with interstate or foreign commerce—Exclusion, regulation, and taxation of foreign corporations. 24 C. C. A. 13.
Inspection, quarantine, and sanitary regulations interfering with interstate commerce. 59 C. C. A. 191.

CONSPIRACY.
Liabilities of corporations. 39 C. C. A. 17.

CONSPIRACY—Cont'd.
Admissibility, on trial of joint indictments, of acts and declarations of conspirators and codefendants after accomplishment of object. 74 C. C. A. 472.
Judgment against one defendant sued jointly for conspiracy. 80 C. C. A. 245.

CONSTITUTIONAL LAW.
Due process of law in revenue proceedings. 8 C. C. A. 398.
Regulation of commerce by taxation. 8 C. C. A. 492.
Restrictions on grants. 14 C. C. A. 6.
Limitations of taxing power. 23 C. C. A. 515.
Interference with interstate or foreign commerce. 24 C. C. A. 13.
Constitutional limitations of municipal indebtedness. 36 C. C. A. 6.
Trial by jury in criminal prosecutions. 39 C. C. A. 275.
Impairing obligation of contract for exemption from taxation. 70 C. C. A. 294.
Imposition of penalty, extra allowance of damages, costs, or fees as denial of equal protection of law. 72 C. C. A. 547.
Validity of laws alleged to impair charter or franchise of corporation as dependent on reservation of power to alter or amend. 77 C. C. A. 281.

CONTEMPT.
Liability of attorneys. 48 C. C. A. 7.

CONTRACT LABOR.
Importation. 66 C. C. A. 133.

CONTRACTS.
Implied obligation to pay for benefits received. 2 C. C. A. 488.
Jurisdiction of federal courts as to laws impairing obligation of contract. 11 C. C. A. 316.
Relating to use of trade-name. 14 C. C. A. 104.
Mutuality in. 15 C. C. A. 543.
Intent as an element in offer and acceptance. 16 C. C. A. 199.
Admiralty jurisdiction over. 18 C. C. A. 347; 27 C. C. A. 530.
Of common carriers other than for carriage. 20 C. C. A. 521.
Restraining competition in bidding for public works at judicial sales, etc. 28 C. C. A. 192.
For lobby services. 29 C. C. A. 446.
Breach of executory contract—Accrual of right to sue. 30 C. C. A. 210.
Divisibility of contracts. 30 C.C.A. 467.
Of persons non compos mentis under guardianship. 34 C. C. A. 264.
Monopolistic contracts—Validity as affected by public policy. 9 C. C. A. 666; 34 C. C. A. 486.
Marketable title. 40 C. C. A. 592.
Sufficiency of expression of consideration in memorandum within statute of frauds. 46 C. C. A. 183.

Digitized by Google

CONTRACTS—Cont'd.
Persons entitled to enforce specific performance. 47 C. C. A. 493.
Enforcement of contracts requiring performance of continuous acts. 49 C. C. A. 103.
Discharge of surety on building contract by change in obligation or duty of principal. 52 C. C. A. 427.
Marriage by mutual agreement. 52 C. C. A. 581.
Restraining breach of contract of employé not to engage in competing business. 53 C. C. A. 492.
Validity of contracts with public officers as affected by legality of object or consideration. 56 C. C. A. 10.
For sale of things to be produced or manufactured. 58 C. C. A. 363.
Merger of contracts. 60 C. C. A. 6.
Relating to liability of master for negligence causing injury to or death of servant. 62 C. C. A. 5.
Enforcement of contracts of which time is the essence. 63 C. C. A. 562.
Relation of carrier to persons carried under contract with their employers. 67 C. C. A. 427.
Impairing obligation of contract for exemption from taxation. 70 C. C. A. 294.
Practical construction of contracts by parties. 73 C. C. A. 392.
Validity of laws alleged to impair charter or franchise of corporation as dependent on reservation of power to alter or amend. 77 C. C. A. 281.
Rights and liabilities of parties contracting with trusts or combinations in restraint of trade. 78 C. C. A. 612.
Remote or speculative profits as element of damages for breach of contract. 81 C. C. A. 546.

CONTRIBUTION.
On marine loss—General average. 20 C. C. A. 357.

COPYRIGHTS.
Laches as a defense in suits for infringement. 22 C. C. A. 211; 36 C. C. A. 613.
Matter subject to copyright. 58 C. C. A. 273.
Dedication to public or abandonment of copyright. 69 C. C. A. 563.
Infringement by use of extracts and quotations. 76 C. C. A. 475.
Rights of authors to control of publication, disposition or use of their productions independent of statutory copyright. 77 C. C. A. 620.

CORPORATIONS.
Citizenship for purposes of federal jurisdiction. 6 C. C. A. 174; 10 C. C. A. 249; 27 C. C. A. 298.
Status of foreign corporations. 7 C. C. A. 419.
Dissolution of foreign corporation. 7 C. C. A. 421.

CORPORATIONS—Cont'd.
Jurisdiction of federal courts in suits against federal corporations. 11 C. C. A. 314.
Personal liability of directors for negligence. 12 C. C. A. 680; 33 C. C. A. 230.
The power of officers and directors in their individual capacity to deal with corporation. 13 C. C. A. 466.
Use of corporate name as trade-name. 17 C. C. A. 579; 27 C. C. A. 357.
Stockholders' liability to creditors in equity. 23 C. C. A. 315; 33 C. C. A. 23.
Exclusion, regulation, and taxation of foreign corporations. 24 C. C. A. 13.
Power to assign for benefit of creditors. 24 C. C. A. 221.
Foreign corporations "doing business" in state. 33 C. C. A. 585; 72 C. C. A. 622.
Liability for torts. 39 C. C. A. 9.
Rights and liabilities of pledgees of stock. 42 C. C. A. 135.
Service of process on foreign corporations. 45 C. C. A. 3; 78 C. C. A. 473.
Acts of corporators and promoters. 46 C. C. A. 576.
Power to form partnership. 50 C. C. A. 131.
Effect of judgment against corporation in action to enforce stockholder's liability. 52 C. C. A. 305.
Limitation of actions against corporate officers. 53 C. C. A. 7.
Cancellation of certificates of corporate stock. 55 C. C. A. 167.
Liability of transferrors and transferees of corporate stock for assessments. 61 C. C. A. 322.
Liabilities enforceable against reorganized corporations. 62 C. C. A. 147.
Acquisition by corporation of stock of other corporation. 68 C. C. A. 120.
Evidence of membership in corporation. 72 C. C. A. 423.
Liabilities of corporate officers for debts and acts of corporation as dependent on knowledge or participation. 75 C. C. A. 492.
Powers of committees of directors or trustees of corporations. 76 C.C.A. 7.
Validity of laws alleged to impair charter or franchise of corporation as dependent on reservation of power to alter or amend. 77 C. C. A. 281.
Liability of corporation succeeding to partnership for debts of firm. 80 C. C. A. 560.
Rights and liabilities of stockholders of railroads on consolidation. 81 C. C. A. 480.

COSTS.
Right to costs in equity. 17 C. C. A. 368.
Imposition of extra allowance of costs, or fees as denial of equal protection of law. 72 C. C. A. 547.

Digitized by Google

COUNTERFEITING.
Nonmailable matter. 30 C. C. A. 86.

COURTS. See "Federal Courts."
Dicta. 64 C. C. A. 361.

CREDIT.
Loss of as element of damages. 62 C. C. A. 612.

CREDIT INSURANCE. 19 C. C. A. 271; 34 C. C. A. 165.

CRIMINAL LAW. See "Rewards."
Practice on trial before jury. 26 C. C. A. 528.
Trial by jury in criminal prosecutions. 39 C. C. A. 275.
Prosecution and punishment of accessories. 44 C. C. A. 326.
Power of court to revise sentence. 46 C. C. A. 412.
Restraining criminal proceedings. 51 C. C. A. 133.
Proof of corpus delicti to corroborate a confession. 53 C. C. A. 278.
Comments of counsel and instructions on failure of accused to testify. 54 C. C. A. 373.
Preliminaries to introduction of secondary evidence in criminal prosecutions. 61 C. C. A. 117.
Discontinuance, nolle prosequi, or dismissal as bar to subsequent prosecution. 68 C. C. A. 4.
Consolidation of and trial of indictments together. 69 C. C. A. 287.
Review, by trial court, of evidence given before grand jury. 69 C. C. A. 488.
Circumstantial evidence of corpus delicti. 70 C. C. A. 156.
Admission on joint trial, of evidence competent only against one or part of defendants. 73 C. C. A. 295.
Admissibility, on trial of joint indictments, of acts and declarations of conspirators and codefendants after accomplishment of object. 74 C. C. A. 472.
Effect of acquittal in criminal prosecution on liability in tort for alleged criminal act. 79 C. C. A. 407.
Right of accused to be confronted by witnesses. 80 C. C. A. 116.
Computation of cumulative sentences. 81 C. C. A. 196.
Admissibility of written instruments in criminal prosecutions as dependent on preliminary proof. 82 C. C. A. 8.

CUSTOMS AND USAGES.
Presumptions. 56 C. C. A. 394.
Existence of custom or usage as question for jury. 83 C. C. A. 9.

CUSTOMS DUTIES.
Interpretation of commercial and trade terms in tariff laws. 18 C. C. A. 545.

DAMAGES.
Mental suffering as an element of damage in general. 11 C. C. A. 556.

DAMAGES—Cont'd.
For mental suffering for delay in delivery of telegram. 11 C. C. A. 571; 15 C. C. A. 250; 28 C. C. A. 62.
Delay in transmission of telegraphic message. 14 C. C. A. 177.
Measure of, in actions against telegraph companies. 15 C. C. A. 235; 28 C. C. A. 59.
In condemnation proceedings. 16 C. C. A. 468.
For personal injuries as affected by plaintiff's character and condition. 27 C. C. A. 138.
Negligence of both master and servant —Division of damages in admiralty. 30 C. C. A. 678.
Liability of corporations for exemplary or punitive damages. 39 C. C. A. 18.
Punitive damages for death by wrongful act. 44 C. C. A. 259.
Reduction or increase of amount of recovery on appeal. 48 C. C. A. 470.
Persons entitled to damages for wrongful enforcement of tax. 54 C. C. A. 550.
Aggravation of disease or injury due to existing disease, predisposition, or physical condition. 54 C. C. A. 645.
Loss of credit as element of damages. 62 C. C. A. 612.
Mitigation of damages for wrongful discharge from employment by failure of servant to seek or accept other employment. 64 C. C. A. 5.
Retraction, apology, or reparation as ground for mitigation of damages for libel and slander. 71 C. C. A. 315.
Imposition of penalty, extra allowance of damages, costs or fees as denial of equal protection of law. 72 C. C. A. 547.
Remote or speculative profits as element of damages for breach of contract. 81 C. C. A. 546.

DEATH BY WRONGFUL ACT.
Mental suffering as element of damages. 11 C. C. A. 563.
Punitive damages. 44 C. C. A. 259.
What law governs actions. 47 C. C. A. 606.

DECREES.
Power of court to amend or modify interlocutory orders and decrees. 61 C. C. A. 236.

DEDICATION.
Of copyright to public. 69 C. C. A. 563.

DEEDS.
Names of parties. 23 C. C. A. 146.
Construction and operation of conveyances of real property and interests therein by executors or administrators. 74 C. C. A. 382.

DEMURRAGE.
Quick dispatch. 14 C. C. A. 657; 21 C. C. A. 342.
Definition and general principles. 21 C. C. A. 337; 46 C. C. A. 4.

Digitized by Google

DEPOSITION.
Conformity to state practice. 5 C. C. A. 602; 27 C. C. A. 392; 71 C. C. A. 110.
Use of deposition when deponent is present. 50 C. C. A. 232.
Irregularities in taking or return of depositions as ground for exclusion as evidence. 73 C. C. A. 608.

DICTA.
Of courts. 64 C. C. A. 361.

DIRECTORS.
Personal liability for negligence. 12 C. C. A. 680; 33 C. C. A. 230.

DISCOVERY.
Conformity to state practice. 5 C. C. A. 594; 27 C. C. A. 393.
Persons against whom production and inspection of books or writings may be obtained. 81 C. C. A. 96.

DISMISSAL AND NONSUIT.
Discontinuance, nolle prosequi, or dismissal as bar to subsequent prosecution. 68 C. C. A. 4.

DISSOLUTION.
Of foreign corporations. 7 C. C. A. 421.
Of municipal corporations—Effect on indebtedness. 33 C. C. A. 506.

DIVORCE.
Separation agreements. 38 C. C. A. 608.

DOMICILE.
Effect of change of domicile on the question of diverse citizenship. 10 C. C. A. 251.

DOWER.
How inchoate right extinguished. 3 C. C. A. 316.
In mines. 3 C. C. A. 316.
What estate subject to dower. 3 C. C. A. 316.
Divestiture of inchoate right by legislative action. 4 C. C. A. 295.

ELECTION OF REMEDIES.
Against undisclosed principal or agent. 77 C. C. A. 166.

EMINENT DOMAIN.
Consequential and indirect damages. 16 C. C. A. 468.
Nature of estate or interest acquired in condemnation proceedings. 53 C. C. A. 604.
Nature and extent of power of United States to condemn property for public use. 70 C. C. A. 653.
Proceedings under power of eminent domain as civil suits under laws relating to removal of causes to federal courts. 73 C. C. A. 183.

EQUITY.
Right to costs. 17 C. C. A. 368.
Equitable mortgages. 18 C. C. A. 458.
Stockholders' liability to creditors of corporation. 23 C. C. A. 315; 33 C. C. A. 23.

EQUITY—Cont'd.
Compensation of masters in chancery. 27 C. C. A. 475.
Conclusiveness and effect of judgments as between courts of law and equity. 50 C. C. A. 463.
Obtaining possession or establishing title to personal property in equity. 58 C. C. A. 101.
Operation and effect of decision in equitable suit for infringement of patent. 68 C. C. A. 541.
He, who comes into equity, must come with clean hands. 70 C. C. A. 543.

ESTOPPEL.
As against state or United States. 16 C. C. A. 353.

EVIDENCE.
New proofs on appeal in admiralty. 3 C. C. A. 322.
Rules of evidence in federal courts—Following state practice. 5 C. C. A. 594.
Examination of party before trial—Conformity to state practice. 5 C. C. A. 602.
Excluded from bill of exceptions. 14 C. C. A. 248.
Burden of proof of negligence where passenger has been injured. 32 C. C A. 23.
Evidence admissible to show injury to live stock, during transportation, through negligence or accident. 32 C. C. A. 148.
Judicial notice of public laws and regulations. 44 C. C. A. 4.
Use of deposition when deponent is present. 50 C. C. A. 232.
Negative testimony. 52 C. C. A. 82.
As to character or reputation in civil actions. 55 C. C. A. 7.
Presumptions as to customs and usages. 56 C. C. A. 394.
Utility, extent of use, and commercial success as evidence of invention. 59 C. C. A. 620.
Preliminaries to introduction of secondary evidence in criminal prosecutions. 61 C. C. A. 117.
Additional proofs in appellate court without trial de novo. 67 C. C. A. 600.
Presumptions and burden of proof as to cause of loss or injury to goods shipped by vessel, and diligence or negligence of carrier. 68 C. C. A. 398.
Review, by trial court, of evidence given before grand jury. 69 C. C. A. 488.
Circumstantial evidence of corpus delicti. 70 C. C. A. 156.
Procedure of federal courts and adoption of state practice as to taking proof. 71 C. C. A. 110.
Evidence of membership in corporation. 72 C. C. A. 423.
Admission on joint trial, of evidence competent only against one or part of defendants. 73 C. C. A. 295.

Digitized by Google

EVIDENCE—Cont'd.
Irregularities in taking or return of depositions as ground for exclusion as evidence. 73 C. C. A. 608.
Expert testimony as to value of services. 74 C. C. A. 257.
Admissibility, on trial of joint indictments, of acts and declarations of conspirators and codefendants after accomplishment of object. 74 C. C. A. 472.
Inferences from evidence as dependent on sufficiency and degree of proof. 74 C. C. A. 561.
Evidence of emancipation of child. 75 C. C. A. 393.
Photographs as evidence in civil actions. 78 C. C. A. 145.
Weight and sufficiency of evidence of willful burning by insured as a defence to action on policy. 79 C. C. A. 455.
Persons against whom production and inspection of books or writings may be obtained. 81 C. C. A. 96.
Admissibility of written instruments in criminal prosecutions as dependent on preliminary proof. 82 C. C. A. 8.
Application of doctrine of res ipsa loquitur in actions for injuries to servants. 82 C. C. A. 121.

EXCEPTIONS, BILL OF.
Time of filing—When regulated by state practice. 5 C. C. A. 594.
Exclusion of evidence from. 14 C. C. A. 248.

EXCHANGES.
Membership in stock exchange as an asset in bankruptcy. 43 C. C. A. 389.
Quotations of prices and transactions on exchanges. 61 C. C. A. 2.

EXECUTIVE DEPARTMENTS.
Regulations of. 26 C. C. A. 239.

EXECUTORS AND ADMINISTRATORS.
Citizenship as affecting the jurisdiction of the federal courts. 10 C. C. A. 252.
Probate jurisdiction of federal courts. 36 C. C. A. 276.
Construction and operation of conveyances of real property and interests therein by executor or administrator. 74 C. C. A. 382.

EXTINGUISHMENT.
Of maritime liens. 17 C. C. A. 102.

EXTRADITION.
Scope of review on habeas corpus to procure release of person sought to be extradited. 62 C. C. A. 506.
Fugitives from justice under extradition laws. 63 C. C. A. 104.

FEDERAL COURTS.
Jurisdiction of circuit courts of appeals in general. 1 C. C. A. 6; 32 C. C. A. 475.

FEDERAL COURTS—Cont'd.
Jurisdiction as affected by state laws. 1 C. C. A. 513.
Jurisdiction of circuit court of appeals to review interlocutory decrees in patent cases. 3 C. C. A. 572; 27 C. C. A. 189; 32 C. C. A. 484.
Conformity of practice in common-law actions to that of state court. 5 C. C. A. 594; 27 C. C. A. 392.
Jurisdiction over corporations. 6 C. C. A. 174.
State laws as rules of decision in federal courts. 11 C. C. A. 71; 29 C. C. A. 553.
Diverse citizenship as a ground of federal jurisdiction. 10 C. C. A. 249; 27 C. C. A. 298.
Jurisdiction in cases involving federal question. 11 C. C. A. 308; 35 C. C. A. 7.
Jurisdiction and judgments of Indian courts. 11 C. C. A. 468.
Federal jurisdiction of suits against state. 13 C. C. A. 165.
Orders, decrees, and judgments reviewable in circuit court of appeals. 13 C. C. A. 374.
Jurisdiction as affected by possession of the subject-matter. 15 C. C. A. 6.
Enjoining proceedings in state courts. 16 C. C. A. 90; 27 C. C. A. 575; 63 C. C. A. 437.
Lack of jurisdiction of United States circuit court. 16 C. C. A. 507.
Removal of causes—Separable controversy. 18 C. C. A. 86; 35 C. C. A. 155.
Jurisdiction in admiralty as to matters of contract. 18 C. C. A. 347; 27 C. C. A. 530.
Jurisdiction of circuit courts as determined by the amount in controversy. 19 C. C. A. 75; 36 C. C. A. 459.
Jurisdiction in admiralty to enforce liens created by state laws. 21 C. C. A. 21.
Conclusiveness of judgment between federal and state courts. 21 C. C. A. 478; 49 C. C. A. 468.
Conflict of jurisdiction with state courts. 22 C. C. A. 356.
Jurisdiction in mortgage foreclosure. 24 C. C. A. 523.
Jurisdiction on habeas corpus. 25 C. C. A. 4.
Mandamus to enforce payment of judgment against municipality. 25 C. C. A. 475.
Suits by and against receivers of. 26 C. C. A. 49.
Jury trial—Province of court and jury. 26 C. C. A. 528.
Supplementary and ancillary proceedings and relief. 36 C. C. A. 195.
Probate jurisdiction. 36 C. C. A. 276.
Admiralty jurisdiction of suits between foreigners. 37 C. C. A. 193.
Enjoining proceedings in federal courts. 45 C. C. A. 591.

Digitized by Google

FEDERAL COURTS—Cont'd.
Pendency of action in state or federal court as ground for abatement of action in the other. 47 C. C. A. 205; 73 C. C. A. 521.
Review of jurisdiction of circuit courts. 48 C. C. A. 351.
Waiver of right as to district in which suit may be brought. 52 C. C. A. 192.
Procedure of federal courts and adoption of state practice as to taking proof. 71 C. C. A. 110.
Legal and equitable remedies and proceedings on removal from state court. 75 C. C. A. 4.
Fraudulent joinder of parties to prevent removal of cause to federal court. 78 C. C. A. 362.
Jurisdiction of federal courts to enforce or remove liens or incumbrances on property of parties not inhabitants of nor found in district of suit. 80 C. C. A. 7.

FEDERAL QUESTIONS.
As conferring jurisdiction on United States courts. 11 C. C. A. 308; 35 C. C. A. 7.

FEES.
Imposition of extra allowance of costs, or fees as denial of equal protection of law. 72 C. C. A. 547.

FELLOW SERVANTS.
Who are. 8 C. C. A. 668; 31 C. C. A. 286.
Concurrent negligence of master and fellow servant. 40 C. C. A. 236.

FERRIES.
As carriers. 20 C. C. A. 536.

FIDELITY INSURANCE. 19 C. C. A. 273.

FIRES.
As a peril of the sea. 19 C. C. A. 472.
Presumption of negligence from railroad fires. 41 C. C. A. 370.
Fire escapes on buildings. 64 C. C. A. 217.
What constitutes loss by fire under insurance policy. 72 C. C. A. 3.

FORECLOSURE.
In federal courts. 24 C. C. A. 523.
Distribution of proceeds. 29 C. C. A. 639.

FOREIGN CORPORATIONS.
Status under the rule of comity. 7 C. C. A. 419.
Dissolution. 7 C. C. A. 421.
Exclusion—Regulation and taxation. 24 C. C. A. 13.
What constitutes "doing business" in state. 33 C. C. A. 585; 72 C. C. A. 622.
Service of process. 45 C. C. A. 3; 78 C. C. A. 473.

FORMER JEOPARDY.
Discontinuance, nolle prosequi, or dismissal as bar to subsequent prosecution. 68 C. C. A. 4.

FRANCHISES.
As assets in bankruptcy. 43 C. C. A. 389.

FRAUD.
In use of trade-marks and trade-names. 17 C. C. A. 579, 657; 20 C. C. A. 165; 30 C. C. A. 380.
Nonmailable matter. 30 C. C. A. 86.
Liabilities of corporations. 39 C. C. A. 16.

FRAUDS, STATUTE OF.
Sufficiency of expression of consideration in memorandum within statute. 46 C. C. A. 183.

GARNISHMENT.
Following state practice. 5 C. C. A. 606; 27 C. C. A. 393.
Of receivers. 26 C. C. A. 49.
Nature of rights acquired by garnishment proceedings. 76 C. C. A. 270.

GENERAL AVERAGE.
Marine insurance. 20 C. C. A. 357.

GIFTS.
Revocation of gifts causa mortis. 54 C. C. A. 143.

GRAND JURY.
Review by trial court, of evidence given before grand jury. 69 C. C. A. 488.

GUARANTY.
Discharge of guarantor by discharge of principal without payment or satisfaction. 78 C. C. A. 266.

GUARANTY INSURANCE. 19 C. C. A. 271.

GUARDIAN AND WARD.
Citizenship as affecting the jurisdiction of the federal courts. 10 C. C. A. 253; 27 C. C. A. 300.

HABEAS CORPUS.
Jurisdiction of federal courts. 25 C. C. A. 4.
Scope of review on habeas corpus to procure release of persons sought to be extradited. 62 C. C. A. 506.

HEALTH.
Inspection, quarantine, and sanitary regulations interfering with interstate commerce. 59 C. C. A. 191.

HOMESTEAD.
Rights acquired by homestead settlements and entries on public lands. 59 C. C. A. 434.

HOSPITALS.
Liability for negligence. 47 C. C. A. 134.

Digitized by Google

HUSBAND AND WIFE.
Liability of husband for negligence and torts of wife. 12 C. C. A. 196.
Paraphernal property. 31 C. C. A. 40.
Separation agreements. 38 C. C. A. 608.
Citizenship of married women. 65 C. C. A. 5.
Rights of action between. 79 C. C. A. 306.

IMPLICATION.
Repeal of statutes by implication. 38 C. C. A. 136.

IMPROVEMENTS.
Rights of co-tenant as to improvements made under mistaken belief of perfect title. 69 C. C. A. 19.

INDEBTEDNESS.
Constitutional and statutory limitations of municipal indebtedness. 36 C. C. A. 6.

INDEPENDENT CONTRACTORS.
Negligence of employés. 28 C. C. A. 392.

INDIANS.
Jurisdiction and judgments of Indian courts. 11 C. C. A. 468.
Citizenship of. 27 C. C. A. 298.

INDICTMENT AND INFORMATION.
Consolidation of and trial of indictments together. 69 C. C. A. 287.

INFANTS.
Imputed negligence. 34 C. C. A. 4.
Age as affecting contributory negligence. 37 C. C. A. 362.
Implied emancipation of child. 71 C. C. A. 629.
Evidence of emancipation of child. 75 C. C. A. 393.

INJUNCTION.
Restraining proceedings in state courts. 16 C. C. A. 90; 27 C. C. A. 575; 63 C. C. A. 437.
Jurisdiction of circuit court of appeals to review interlocutory decrees. 32 C. C. A. 481.
Restraining pollution of water courses. 37 C. C. A. 544.
Right of taxpayer to enjoin misuse of public funds and property. 38 C. C. A. 458.
Restraining proceedings in federal courts. 45 C. C. A. 591.
Restraining criminal proceedings. 51 C. C. A. 133.
Restraining breach of contract of employé not to engage in competing business. 53 C. C. A. 492.
Persons entitled to restrain wrongful enforcement of tax. 54 C. C. A. 550.
Restraining enforcement of judgment pending establishment or enforcement of set-off or counterclaim. 58 C. C. A. 532.

INJUNCTION—Cont'd.
Grounds for denial of preliminary injunctions in patent infringement suits. 72 C. C. A. 123.

INJURIOUS NOTICES.
Nonmailable matter. 30 C. C. A. 93.

INNKEEPERS.
Fire escapes on buildings. 64 C. C. A. 217.
Liabilities for personal injuries to guests. 66 C. C. A. 483.

INSANE PERSONS.
Contracts of persons non compos mentis under guardianship. 33 C. C. A. 264.
Effect of insanity on the question of suicide in insurance suits. 16 C. C. A. 623; 28 C. C. A. 284.

INSOLVENCY.
Effect of national bankruptcy act on state insolvency laws and on assignments for benefit of creditors. 51 C. C. A. 11.
Right to proceeds of collection on insolvency of collecting bank. 69 C. C. A. 333.

INSPECTION.
Of public records. 49 C. C. A. 210.
Inspection, quarantine, and sanitary regulations interfering with interstate commerce. 59 C. C. A. 191.
Duty of servant to inspect appliances and places for work. 65 C. C. A. 370.

INSURANCE.
Accident insurance—Risks and causes of loss. 38 C. C. A. 3.
Conditions in policy as to time for bringing suit. 2 C. C. A. 473; 35 C. C. A. 404.
Conditions of policy—Arbitration. 9 C. C. A. 628; 39 C. C. A. 389.
Authority of insurance agent to waive prepayment of premiums. 13 C. C. A. 292.
Suicide as a defense to a life policy. 16 C. C. A. 623; 28 C. C. A. 284.
Credit insurance. 19 C. C. A. 271; 34 C. C. A. 165.
Guaranty insurance. 19 C. C. A. 271.
Fidelity insurance. 19 C. C. A. 273.
Title insurance. 19 C. C. A. 278.
Marine insurance—Perils of the sea. 19 C. C. A. 465.
Marine insurance—General average. 20 C. C. A. 357.
Waiver of condition against other insurance. 27 C. C. A. 46.
Divisibility of contracts. 30 C. C. A. 474.
Waiver by acceptance of premiums. 33 C. C. A. 369.
What constitutes an insurable interest in human life. 39 C. C. A. 632.
Change of beneficiary. 40 C. C. A. 4.
Commencement of risk. 41 C. C. A. 273.

Digitized by Google

INSURANCE—Cont'd.
What law governs policies. 46 C. C. A. 287; 83 C. C. A. 100.
Authority of insurance agents as to acceptance of risks. 49 C. C. A. 335.
Liability for injuries sustained by assured while engaged in occupation not covered by policy. 51 C. C. A. 434.
Time for notice of loss. 55 C. C. A. 376.
Notice of premiums, dues, and assessments. 59 C. C. A. 317.
Mutual benefit insurance contracts as affected by subsequent provisions and amendments of charter, constitution, or by-laws. 63 C. C. A. 285.
Subrogation of insurer under assignment of rights of insured. 65 C. C. A. 615.
What constitutes loss by fire under insurance policy. 72 C. C. A. 3.
Weight and sufficiency of evidence of willful burning by insured as a defense to action on policy. 79 C. C. A. 455.
Accounting for profits, dividends or surplus of mutual insurance company at instance of policy holders or stockholders. 81 C. C. A. 4.

INTENT.
As an element in offer and acceptance of proposition. 16 C. C. A. 199.

INTERNATIONAL LAW.
Effect of acquisition of territory by United States on laws and property rights therein. 80 C. C. A. 457.

INTERSTATE COMMERCE.
Taxation of by state. 8 C. C. A. 492.
Jurisdiction of federal courts of suits under interstate commerce act. 11 C. C. A. 318.
State laws interfering with interstate commerce. 24 C. C. A. 21.
Inspection, quarantine, and sanitary regulations interfering with interstate commerce. 59 C. C. A. 191.

JUDGMENT.
Method of entering judgment in federal court—Following state practice. 5 C. C. A. 604.
Of federal courts—Jurisdiction as involving federal question. 11 C. C. A. 317.
Giving full faith and credit—Jurisdiction of federal courts. 11 C. C. A. 318.
Rendition on Sunday. 12 C. C. A. 462.
Finality of judgments for purposes of review. 2 C. C. A. 379; 17 C. C. A. 238; 28 C. C. A. 482.
Conclusiveness as between federal and state courts. 21 C. C. A. 478; 49 C. C. A. 468.
Enforcement against municipality by mandamus. 25 C. C. A. 475.

JUDGMENT—Cont'd.
Conclusiveness and effect of judgments as between courts of law and equity. 50 C. C. A. 463.
Effect of judgment against corporation in action to enforce stockholder's liability. 52 C. C. A. 305.
Restraining enforcement of judgment pending establishment or enforcement of set-off or counterclaim. 58 C. C. A. 532.
Power of court to amend or modify interlocutory orders and decrees. 61 C. C. A. 236.
Authority of attorney after judgment. 67 C. C. A. 130.
Satisfaction of one or more judgments for same cause of action. 67 C. C. A. 322.
Operation and effect of decision in equitable suit for infringement of patent. 68 C. C. A. 541.
Judgment against one defendant sued jointly for conspiracy. 80 C. C. A. 245.
Deficiency judgments and personal liability on foreclosure of vendors' liens. 82 C. C. A. 488.

JUDICIAL SALES.
On Sunday. 12 C. C. A. 462.
Contracts restraining competition in bidding. 28 C. C. A. 192.

JURISDICTION.
Of federal courts. See "Federal Courts."
Of circuit court of appeals. 1 C. C. A. 6; 32 C. C. A. 475.
Of supreme court. 1 C. C. A. 9, 11.
Diverse citizenship as ground of federal jurisdiction. 10 C. C. A. 249; 27 C. C. A. 298.
Federal question as ground of jurisdiction. 11 C. C. A. 308; 35 C. C. A. 7.
Of Indian courts. 11 C. C. A. 468.
As affected by possession of the subject-matter. 15 C. C. A. 6.
Removal of causes—Separable controversy. 18 C. C. A. 86; 35 C. C. A. 155.
Of circuit courts as determined by the amount in controversy. 19 C. C. A. 75; 36 C. C. A. 459.
Conflict between federal and state courts. 22 C. C. A. 356.
Probate jurisdiction. 36 C. C. A. 276.
Admiralty jurisdiction of suits between foreigners. 37 C. C. A. 193.
Review of jurisdiction of circuit courts. 48 C. C. A. 351.

JURY.
Right to trial by jury in federal court. 5 C. C. A. 603; 26 C. C. A. 528.
Following state practice. 5 C. C. A. 603; 27 C. C. A. 393.
Instructing jury and receiving verdict on Sunday. 12 C. C. A. 462.
Trial by jury in criminal prosecutions. 39 C. C. A. 275.

Digitized by Google

LACHES.
As a defense in suits for infringement of patents, copyrights, and trademarks. 22 C. C. A. 211; 36 C. C. A. 613.

LAND DEPARTMENT.
Conclusiveness and effect of decisions. 22 C. C. A. 38; 28 C. C. A. 344; 57 C. C. A. 207.

LANDLORD AND TENANT.
Holding over by tenant after expiration of term as affecting liability for rent. 71 C. C. A. 513.

LIBEL AND SLANDER.
Evidence of other offenses and publications in mitigation of damages. 40 C. C. A. 168.
Liabilities of corporations. 39 C. C. A. 15.
Retraction, apology, or reparation as ground for mitigation of damages. 71 C. C. A. 315.

LICENSE.
Implied rights of licensee of a patent. 25 C. C. A. 280.
Rights of licensee on train. 31 C. C. A. 164.
Licenses as assets in bankruptcy. 43 C. C. A. 389.
Sublicenses and assignments of licenses for use or sale of patents. 64 C. C. A. 596.

LIENS.
Maritime liens. 15 C. C. A. 679; 17 C. C. A. 102; 21 C. C. A. 21.
Attorneys' liens. 32 C. C. A. 229.
Maritime liens for torts. 34 C. C. A. 565.
Who are entitled to liens or preferences as laborers or employés. 47 C. C. A. 2.
Lien of banks on stock. 56 C. C. A. 179.
Continuance or revival of mechanics' liens. 71 C. C. A. 17.
Persons entitled to liens against railroads for labor and supplies. 75 C. C. A. 274.
Jurisdiction of federal courts to enforce or remove liens or incumbrances on property of parties not inhabitants of nor found in district of suit. 80 C. C. A. 7.

LIFE INSURANCE.
Suicide as a defense. 16 C. C. A. 623; 28 C. C. A. 284.
Waiver by acceptance of premiums. 33 C. C. A. 369.

LIMITATION OF ACTIONS.
Against corporate officers. 53 C. C. A. 7.
Bar of action as determined by limitations of state other than that in which action is brought. 58 C. C. A. 186.

LITERARY PROPERTY.
Rights of authors to control of publication, disposition or use of their productions independent of statutory copyright. 77 C. C. A. 620.

LOTTERY.
What constitutes. 12 C. C. A. 346.
Nonmailable matter. 30 C. C. A. 90.

MAIL.
Nonmailable matter. 30 C. C. A. 79.

MALICIOUS PROSECUTION.
Liabilities of corporations. 39 C. C. A. 14.

MANDAMUS.
In aid of appeals. 10 C. C. A. 450.
To enforce payment of judgment against municipality. 25 C. C. A. 475.
Appeal or mandamus. 47 C. C. A. 376.
Enforcement of decree of appellate court by mandamus. 77 C. C. A. 409.

MANUFACTURES.
Liabilities of manufacturers of injurious substances or defective machinery and appliances for injuries to persons other than immediate vendees. 57 C. C. A. 5.
Contracts for sale of things to be manufactured. 58 C. C. A. 363.
Fire escapes on factories. 64 C. C. A. 217.

MARINE INSURANCE.
Perils of the sea. 19 C. C. A. 465.
General average. 20 C. C. A. 357.

MARITIME LIENS.
For supplies and services—Presumption as to credit to vessel. 15 C. C. A. 679.
Waiver and extinguishment. 17 C. C. A. 102.
Created by state laws. 21 C. C. A. 21.
For torts. 34 C. C. A. 565.

MARRIAGE.
Effect of existing marriage on subsequent marriage or contract to marry. 50 C. C. A. 583.
Marriage by mutual agreement. 52 C. C. A. 581.

MASTER AND SERVANT.
Who are fellow servants. 8 C. C. A. 668; 31 C. C. A. 286.
Liabilities of carriers for injuries caused by negligence or torts of servants. 10 C. C. A. 466; 27 C. C. A. 651.
Who are independent contractors. 28 C. C. A. 392.
Divisibility of contracts for services. 30 C. C. A. 467.
Negligence of both—Division of damages in admiralty. 30 C. C. A. 678.
Duty of railroad companies to furnish safe appliances. 37 C. C. A. 8.

Digitized by Google

MASTER AND SERVANT—Cont'd.
Assumption of risk incident to employment. 38 C. C. A. 314.
Concurrent negligence of master and fellow servant. 40 C. C. A. 236.
Injuries to servant while not on duty. 44 C. C. A. 489.
Duty of railroad companies to block switches. 46 C. C. A. 98.
Who are entitled to liens or preferences as laborers or employés. 47 C. C. A. 2.
What law governs master's liability for injuries to servant. 48 C. C. A. 232.
Liability for injuries to volunteers. 51 C. C. A. 509.
Restraining breach of contract of employé not to engage in competing business. 53 C. C. A. 492.
Contracts relating to liability of master for negligence causing injury to or death of servant. 62 C. C. A. 5.
Mitigation of damages for wrongful discharge from employment by failure of servant to seek or accept other employment. 64 C. C. A. 5.
Fire escapes on buildings. 64 C. C. A. 217.
Duty of servant to inspect appliances and places for work. 65 C. C. A. 370.
Importation of contract labor. 66 C. C. A. 133.
Relation of carrier to persons carried under contract with their employers. 67 C. C. A. 427.
Right to invention as between employer and employé. 71 C. C. A. 221.
Expert testimony as to value of services. 74 C. C. A. 257.
Application of doctrine of res ipsa loquitur in actions for injuries to servants. 82 C. C. A. 121.

MASTERS IN CHANCERY.
Compensation. 27 C. C. A. 475.

MECHANICS' LIENS.
Continuance or revival of mechanics' liens. 71 C. C. A. 17.
Persons entitled to liens against railroads for labor and supplies. 75 C. C. A. 274.

MENTAL SUFFERING.
As an element of damages. 11 C. C. A. 556.
Damages for, by delay in delivering telegram. 11 C. C. A. 571; 15 C. C. A. 250; 28 C. C. A. 62.

MINES AND MINING.
Right of dower in mines. 3 C. C. A. 316.
Mining partnerships. 35 C. C. A. 515.
Conclusiveness of patents for mining claims. 28 C. C. A. 346; 48 C. C. A. 674.
Rights under mining location to veins having apexes within claim. 66 C. C. A. 311.

MINES AND MINING—Cont'd.
Sufficiency of discovery of mineral characteristics to support mining location. 79 C. C. A. 6.
Partition of mineral rights or lands. 81 C. C. A. 405.

MOBS.
Municipal liability for acts of mobs. 57 C. C. A. 517.

MONOPOLIES.
Constitutional restrictions on grant. 14 C. C. A. 6.
Monopolistic contracts—Validity as affected by public policy. 34 C. C. A. 486.
Rights and liabilities of parties contracting with trusts or combinations in restraint of trade. 78 C. C. A. 612.

MORTGAGES.
Equitable mortgages — Agreement to give a mortgage. 18 C. C. A. 458.
Names of parties in deeds and mortgages. 23 C. C. A. 146.
Foreclosure in federal courts. 24 C. C. A. 523.
Distribution of proceeds on foreclosure. 29 C. C. A. 639.
Taxation of. 31 C. C. A. 467.
Subrogation to rights of mortgagee. 42 C. C. A. 304.

MUNICIPAL CORPORATIONS.
Liability for torts of public officers. 14 C. C. A. 534.
Enforcement of judgment against municipality by mandamus. 25 C. C. A. 475.
Dissolution and reincorporation—Effect on indebtedness. 33 C. C. A. 506.
Constitutional and statutory limitations of municipal indebtedness. 36 C. C. A. 6.
Right of taxpayer to enjoin misuse of public funds and property. 38 C. C. A. 458.
Bona fide purchasers of municipal bonds. 41 C. C. A. 6.
Rights of telegraph and telephone companies to use of streets. 44 C. C. A. 155.
Municipal liability for acts of mobs. 57 C. C. A. 517.
Effect of violation of ordinances limiting speed of trains. 59 C. C. A. 5.
Rights and remedies of holders of invalid municipal securities. 66 C. C. A. 235.
Relative rights of street railroads, and vehicles and pedestrians in use and occupation of streets. 73 C. C. A. 12.
Sufficiency of presentation, service, or filing of claim for personal injuries or notice thereof as condition precedent to action against municipal corporation. 83 C. C. A. 559.

NAMES.
Of parties in deeds and mortgages. 23 C. C. A. 146.
Use of person's name as trade-name. 17 C. C. A. 579; 27 C. C. A. 357.

Digitized by Google

NAVIGABLE WATERS.
Obstruction—Jurisdiction of federal courts. 11 C. C. A. 318.

NEGLIGENCE.
Liabilities of carriers for negligence of servants. 10 C. C. A. 466; 27 C. C. A. 651.
Of wife—Liability of husband. 12 C. C. A. 196.
Personal liability of directors. 12 C. C. A. 680; 33 C. C. A. 230.
In transmission of telegram. 14 C. C. A. 177.
Of independent contractor. 28 C. C. A. 392.
Duty of railroads to give warning signals at crossing. 29 C. C. A. 90.
Of both master and servant—Division of damages in admiralty. 30 C. C. A. 678.
Injuries to trespasser on train. 31 C. C. A. 76.
Injuries to one traveling on pass. 31 C. C. A. 164.
Injuries to licensee on train. 31 C. C. A. 164.
Injuries to servant. 31 C. C. A. 286.
Burden of proof where passengers have been injured. 32 C. C. A. 23.
Evidence admissible to show injury to live stock through negligence or accident during transportation. 32 C. C. A. 148.
Imputed to infant. 34 C. C. A. 4.
Sleeping-car companies. 34 C. C. A. 386.
Duty of railroad companies to furnish safe appliances. 37 C. C. A. 8.
Age as affecting contributory negligence. 37 C. C. A. 362.
Liabilities of corporations. 39 C. C. A. 15.
Concurrent negligence of master and fellow servant. 40 C. C. A. 236.
Care required of motormen. 40 C. C. A. 361.
Presumption from railroad fires. 41 C. C. A. 370.
Injuries to servant not on duty. 44 C. C. A. 489.
Duty of railroad companies to block switches. 46 C. C. A. 98.
Liabilities of charitable institutions for negligence. 47 C. C. A. 134.
What law governs master's liability for injuries to servant. 48 C. C. A. 232.
Liability of employer for injuries to volunteers. 51 C. C. A. 509.
Injuries to railroad passengers while occupying positions other than regular seats. 54 C. C. A. 4.
Injuries to persons at public entertainment or exhibition. 56 C. C. A. 502.
Liabilities of manufacturers and venders of injurious substances or defective machinery and appliances for injuries to persons other than immediate vendees. 57 C. C. A. 5.
In ejection of passengers or trespassers under disability. 62 C. C. A. 422.

NEGLIGENCE—Cont'd.
Liabilities of connecting carriers for injuries to passengers. 64 C. C. A. 485.
Fire escapes on buildings. 64 C. C. A. 217.
Liabilities of innkeepers for personal injuries to guests. 66 C. C. A. 483.
Presumptions and burden of proof as to cause of loss or injury to goods shipped by vessel and diligence or negligence of carrier. 68 C. C. A. 398.

NEUTRALITY LAWS.
Object and scope of neutrality law. 28 C. C. A. 622.

NEW TRIAL.
Following state practice. 5 C. C. A. 605; 27 C. C. A. 393.
Jurisdiction of lower court to rehear cause or grant new trial after remand by appellate court. 70 C. C. A. 416.

NOLLE PROSEQUI.
As bar to subsequent prosecution. 68 C. C. A. 4.

NON COMPOS MENTIS.
Contracts of persons non compos mentis under guardianship. 34 C. C. A. 264.

NONMAILABLE MATTER.
Obscene matter. 30 C. C. A. 79.
Frauds and counterfeiting. 30 C. C. A. 86.
Lotteries. 30 C. C. A. 90.
Injurious notices. 30 C. C. A. 93.
Threatening and dunning postal cards. 30 C. C. A. 94.

NONRESIDENTS.
Taxation of property. 31 C. C. A. 467.

NOTICE.
Sufficiency of notice of dissolution of partnership. 54 C. C. A. 229.
To agent—Adverse interest, fraud, or collusion of agent. 56 C. C. A. 561.
Time for notice of loss under insurance policy. 55 C. C. A. 376.
Of insurance, premiums, dues, and assessments. 59 C. C. A. 317.

OBITER DICTUM. 64 C. C. A. 361.

OBSCENE MATTER.
Nonmailable matter. 30 C. C. A. 79.

OFFICE AND OFFICER.
Jurisdiction of federal courts in suits against federal officers. 11 C. C. A. 316.
Torts of public officers. 14 C. C. A. 534.
Liabilities of sureties for acts of officers under color of office. 43 C. C. A. 222.
Validity of contracts with public officers as affected by illegality of object or consideration. 56 C. C. A. 10.

Digitized by Google

ORDERS.
Power of court to amend or modify interlocutory orders and decrees. 61 C. C. A. 236.

PARAPHERNAL PROPERTY.
What constitutes. 31 C. C. A. 40.

PARENT.
Death of child by wrongful act—Damages. 1 C. C. A. 34.
Implied emancipation of child. 71 C. C. A. 629.
Evidence of emancipation of child. 75 C. C. A. 393.

PARTIES.
Citizenship as affecting the jurisdiction of the federal courts. 10 C. C. A. 254; 27 C. C. A. 298; 32 C. C. A. 479.
Names of, in deeds and mortgages. 23 C. C. A. 146.
Persons entitled to enforce specific performance. 47 C. C. A. 493.
Persons entitled to injunction restraining or damages for wrongful enforcement of tax. 54 C. C. A. 550.
Fraudulent joinder to prevent removal of cause to federal court. 78 C. C. A. 362.
Who may be parties in actions by or against associations. 82 C. C. A. 270.
Necessary or proper parties in suits to foreclose vendors' liens on realty. 83 C. C. A. 359.

PARTITION.
Of mineral rights or lands. 81 C. C. A. 405.

PARTNERSHIP.
Use of partnership name as tradename. 17 C. C. A. 579; 27 C. C. A. 357.
Mining partnerships. 35 C. C. A. 515.
Purchase of co-partner's interest. 40 C. C. A. 508.
Liability of partnership for torts of partner. 45 C. C. A. 277.
Power of corporation to form partnership. 50 C. C. A. 131.
Sufficiency of notice of dissolution of partnership. 54 C. C. A. 229.
Liability of corporation succeeding to partnership for debt of firm. 80 C. C. A. 560.

PASSENGERS.
Duty of carrier to protect from dangerous fellow passengers. 4 C. C. A. 231.
Right of carrier to restrain or expel disorderly passenger. 4 C. C. A. 231.
Duties and liabilities of sleeping-car companies towards. 10 C. C. A. 335; 34 C. C. A. 386.
Rights against carriers for injuries caused by negligence or torts of servants. 10 C. C. A. 466; 27 C. C. A. 651.

PASSENGERS—Cont'd.
Rights of persons traveling on a pass. 31 C. C. A. 164.
Burden of proof of negligence for injuries to. 32 C. C. A. 23.
Limitation of carrier's liability for injuries to passengers. 32 C. C. A. 301.
Limitation of carrier's liability for injuries to passenger by condition on ticket. 32 C. C. A. 302.
Limitation of liability by carrier for injuries to passenger traveling on pass. 32 C. C. A. 305.
Limitation of carrier's liability for injuries to baggage. 32 C. C. A. 308.
Continuance of passenger relation. 40 C. C. A. 437.
Injuries to railroad passengers while occupying positions other than regular seats. 54 C. C. A. 4.
Negligence in ejecting passengers under disability. 62 C. C. A. 422.
Liabilities of connecting carriers for injuries to passengers. 64 C. C. A. 485.
Relation of carrier to persons carried under contract with their employers. 67 C. C. A. 427.
Accommodations to passengers on vessels. 68 C. C. A. 630.

PATENTS.
To public lands—Cancellation. 22 C. C. A. 38.
Conclusiveness of land patents. 28 C. C. A. 346.
Conclusiveness of patents for mining claims. 28 C. C. A. 346; 48 C. C. A. 674.

PATENTS FOR INVENTIONS.
Effect of previous adjudication on circuit court of appeals. 3 C. C. A. 565; 27 C. C. A. 427; 32 C. C. A. 475.
Review of interlocutory decree granting or continuing injunction in circuit court of appeals. 3 C. C. A. 572; 27 C. C. A. 189; 32 C. C. A. 484.
Jurisdiction of federal courts in suits relating to patents. 11 C. C. A. 313.
Pleading in infringement suits—Demurrer for want of novelty and invention. 19 C. C. A. 595.
Laches as a defense in suits for infringement. 22 C. C. A. 211; 36 C. C. A. 613.
Power of patentee to control his invention. 25 C. C. A. 280.
Contributory infringement of patents. 43 C. C. A. 485.
Accounting by infringer for profits. 50 C. C. A. 8.
Time for application for reissue. 55 C. C. A. 560.
Utility, extent of use, and commercial success as evidence of invention. 59 C. C. A. 620.
Sublicenses and assignments of licenses for use or sale of patents. 64 C. C. A. 596.
Amendment of application. 68 C. C. A. 239.

Digitized by Google

PATENTS FOR INVENTIONS—Cont'd.
Operation and effect of decision in equitable suit for infringement. 68 C. C. A. 541.
Priority and continuance of public use of invention as affecting patentability. 69 C. C. A. 646.
Abandonment of invention. 70 C. C. A. 6.
Right to inventions as between employer and employé. 71 C. C. A. 221.
Grounds for denial of preliminary injunctions in patent infringement suits. 72 C. C. A. 123.

PAYMENT.
Implied obligation to pay for benefits received. 2 C. C. A. 488.

PENALTIES.
Imposition of penalty, extra allowance of damages, costs, or fees as denial of equal protection of law. 72 C. C. A. 547.

PERILS OF THE SEA.
Damages to ship and cargo by vermin. 18 C. C. A. 231; 19 C. C. A. 473.
Damages to ship and cargo through various causes. 19 C. C. A. 465; 64 C. C. A. 118.

PHYSICIANS AND SURGEONS.
Expert testimony as to value of services. 74 C. C. A. 257.

PLEADING.
Following state practice. 5 C. C. A. 594; 27 C. C. A. 392.
Averments of citizenship to show jurisdiction in federal courts. 10 C. C. A. 261; 27 C. C. A. 303.
In patent infringement suits—Demurrer for want of novelty and invention. 19 C. C. A. 595.
Private statutes. 67 C. C. A. 241.

PLEDGES.
Rights and liabilities of pledgees of corporate stock. 42 C. C. A. 135.

POST OFFICE.
Nonmailable matter. 30 C. C. A. 79.

PRACTICE.
As regulated by state laws. 1 C. C. A. 515; 5 C. C. A. 594; 9 C. C. A. 548; 27 C. C. A. 392.

PREJUDICE.
As ground for removal of causes. 8 C. C. A. 95.

PRINCIPAL AND AGENT.
Agency implied from course of dealing. 42 C. C. A. 221.
Liability of principal for torts of agent. 43 C. C. A. 316.
Knowledge of agent as notice to principal—Effect of adverse interest, fraud, or collusion of agent. 56 C. C. A. 561.

PRINCIPAL AND AGENT—Cont'd.
Election of remedies against undisclosed principal or agent. 77 C. C. A. 166.

PRINCIPAL AND SURETY.
Liabilities of sureties for acts of officers under color of office. 43 C. C. A. 222.
Death of surety. 49 C. C. A. 501.
Liability of sureties for interest, costs, and attorney's fees. 51 C. C. A. 248.
Discharge of surety on building contract by change in obligation or duty of principal. 52 C. C. A. 427.
Discharge of surety by alteration of instrument. 66 C. C. A. 6.

PROBATE.
Jurisdiction of federal courts. 36 C. C. A. 276.

PROCESS.
Following state practice. 5 C. C. A. 599; 27 C. C. A. 393.
Service on foreign corporations. 45 C. C. A. 3; 78 C. C. A. 473.

PROPERTY.
Obtaining possession or establishing title to personal property in equity. 58 C. C. A. 101.
Distinctions between real and personal property. 82 C. C. A. 602.

PUBLIC FUNDS.
Right of taxpayer to enjoin misuse of public funds and property. 38 C. C. A. 458.

PUBLIC LANDS.
Liability of purchaser holding equitable title to state taxation. 4 C. C. A. 196.
Not subject to state taxation. 4 C. C. A. 196.
Jurisdiction of federal courts in suits under public land laws. 11 C. C. A. 314.
Decisions of land department—Their conclusiveness and effect. 22 C. C. A. 38; 28 C. C. A. 344; 57 C. C. A. 207.
Rights acquired by homestead settlements and entries. 59 C. C. A. 434.
Bona fide purchasers. 67 C. C. A. 13.

PUBLIC POLICY.
As affecting contracts. 9 C. C. A. 666; 34 C. C. A. 486.
Contracts for lobby services. 29 C. C. A. 446.
As affecting monopolistic contracts. 34 C. C. A. 486.

QUIETING TITLE.
Necessity of possession in suits to quiet title. 39 C. C. A. 522.

RAILROADS. See "Carriers."
When land grants taxable. 4 C. C. A. 196.
Duty to give warning signals at crossing. 29 C. C. A. 90.

Digitized by Google

RAILROADS—Cont'd.
Rights of trespassers on trains. 31 C. C. A. 76.
Duty of railroad companies to furnish safe appliances. 37 C. C. A. 8.
Location and establishment of stations. 41 C. C. A. 219.
Presumption of negligence from fires. 41 C. C. A. 370.
Injuries to persons at stations. 41 C. C. A. 550.
Abandonment or forfeiture of right of way. 42 C. C. A. 576.
Duty of railroad companies to block switches. 46 C. C. A. 98.
Liability of railroad or street car companies for ejection of trespassers. 51 C. C. A. 578.
Effect of violation of statutes and ordinances regulating speed of trains. 59 C. C. A. 5.
Negligence in ejecting trespassers under disability. 62 C. C. A. 422.
Acquisition or loss of right to railroad right of way by prescription. 63 C. C. A. 7.
Persons entitled to liens against railroads for labor or supplies. 75 C. C. A. 274.
Liabilities of railroads for injuries by fire as affected by management of locomotives. 75 C. C. A. 598.
Rights and liabilities of stockholders of railroads on consolidation. 81 C. C. A. 480.

RECEIVERS.
Citizenship as affecting the jurisdiction of the federal courts. 10 C. C. A. 253.
Actions by and against receivers of federal courts. 26 C. C. A. 49.
Nature of certificates. 26 C. C. A. 350.
Actions by and against receivers and "agents" of national banks. 53 C. C. A. 398.
Preservation and prevention of removal of property beyond jurisdiction pending litigation as ground for appointment of receiver. 57 C.C.A. 80.

RECORDS.
Access to public records. 49 C.C.A. 210.

REFERENCE.
Following state practice. 27 C. C. A. 392.

REMOVAL OF CAUSES.
As restricted by state laws. 1 C. C. A. 515.
For prejudice or local influence. 8 C. C. A. 95.
Separable controversy. 18 C. C. A. 86; 35 C. C. A. 155.
Actions against federal receivers. 26 C. C. A. 49.
Distinctions between legal and equitable remedies in actions removed to federal courts. 63 C. C. A. 204.
Waiver of right. 66 C. C. A. 612.

REMOVAL OF CAUSES—Cont'd.
Proceedings under power of eminent domain as civil suits under laws relating to removal of causes to federal courts. 73 C. C. A. 183.
Legal and equitable remedies and proceedings on removal from state court. 75 C. C. A. 4.
Fraudulent joinder of parties to prevent removal. 78 C. C. A. 362.

REPEAL OF STATUTES.
Repeal of statutes by implication. 38 C. C. A. 136.

REVIEW.
Necessity of leave to file bill of review after decision on appeal. 4 C. C. A. 72.
In bankruptcy cases. 43 C. C. A. 9.

REWARDS.
Performance of conditions in and acceptance of offer of reward. 79 C. C. A. 98.

RISKS.
Assumption of risk incident to employment. 38 C. C. A. 314.

SALE.
Of patent. 25 C. C. A. 280.
Divisibility of contracts. 30 C. C. A. 470.
Liabilities of venders of injurious substances or defective machinery and appliances for injuries to persons other than immediate vendees. 57 C. C. A. 5.
Contracts for sale of things to be produced or manufactured. 58 C. C. A. 363.
Transfer of title as dependent on appropriation by seller. 83 C. C. A. 470.

SALVAGE.
Awards in federal courts. 30 C. C. A. 280.

SEAMEN.
Negligence of both master and servant —Division of damages in admiralty. 30 C. C. A. 678.
Rights and liabilities of seamen as to medical treatment. 83 C. C. A. 186.

SEPARABLE CONTROVERSIES.
As ground for removal of cause. 18 C. C. A. 86; 35 C. C. A. 155.

SEPARATION AGREEMENTS. 38 C. C. A. 608.

SET-OFF AND COUNTERCLAIM.
Restraining enforcement of judgment pending establishment or enforcement of set-off or counterclaim. 58 C. C. A. 532.

Digitized by Google

SHAREHOLDERS.
In national banks. 15 C. C. A. 130; 46 C. C. A. 503.

SHIPPING.
Quick dispatch. 14 C. C. A. 657; 21 C. C. A. 342.
Implied warranty of seaworthiness. 15 C. C. A. 388; 60 C. C. A. 179.
Damages to ships and cargoes by vermin. 18 C. C. A. 231; 19 C. C. A. 473.
Admiralty jurisdiction over contracts. 18 C. C. A. 347; 27 C. C. A. 530.
Loss by perils of the sea. 19 C. C. A. 465; 64 C. C. A. 118.
General average. 20 C. C. A. 357.
Demurrage. 14 C. C. A. 657; 21 C. C. A. 337; 46 C. C. A. 4.
Carriers by water. 20 C. C. A. 535.
Limitation of owner's liability. 45 C. C. A. 387.
Statutory exemptions of shipowners from liability. 49 C. C. A. 11; 83 C. C. A. 294.
Demise of vessel. 55 C. C. A. 225.
Cancellation, surrender, or rescission of charter of vessel. 61 C. C. A. 569.
Presumptions and burden of proof as to cause of loss or injury to goods shipped by vessel, and diligence or negligence of carrier. 68 C. C. A. 398.
Accommodations to passengers on vessels. 68 C. C. A. 630.
Capacity or authority of master of vessel to hypothecate or make bottomry bond. 75 C. C. A. 123.
Liability of vessel for injuries caused by creation of swell. 78 C. C. A. 3.

SIGNALS.
At railroad crossings. 29 C. C. A. 90.

SLEEPING-CAR COMPANIES.
Their duties and liabilities towards their passengers. 10 C. C. A. 335; 34 C. C. A. 386.

SPECIFIC PERFORMANCE.
Persons entitled to enforce specific performance. 47 C. C. A. 493.
Of contracts requiring performance of continuous acts. 49 C. C. A. 103.
Of contracts of which time is the essence. 63 C. C. A. 562.
Necessity of tender of performance. 65 C. C. A. 91.
Conditions and provisions for relief to defendant in decree in action for specific performance. 79 C. C. A. 188.
Right of vendor seeking specific performance of contract to have title perfected pending suit. 80 C. C. A. 354.
Possession and improvements under parol contract for sale or gift of land as ground for specific performance. 81 C. C. A. 276.

SPECIFIC PERFORMANCE—Cont'd.
Right to specific performance as affected by adequacy of remedy at law. 82 C. C. A. 368.

STATE COURTS. See "Removal of Causes."
Proceedings enjoined by federal courts. 16 C. C. A. 90; 27 C. C. A. 575; 63 C. C. A. 437.
Jurisdiction of state courts to enforce maritime liens under state laws. 21 C. C. A. 21.
Conclusiveness of judgments between federal and state courts. 21 C. C. A. 478; 49 C. C. A. 468.
Conflict of jurisdiction with federal courts. 22 C. C. A. 356.
Restraining proceedings in federal courts. 45 C. C. A. 591.
Pendency of action in state or federal court as ground for abatement of action in the other. 47 C. C. A. 205; 73 C. C. A. 521.

STATES.
Federal jurisdiction in suit against state. 13 C. C. A. 165.
Estoppel against. 16 C. C. A. 353.

STATUTES.
Construction of statutes—State laws as rules of decision in federal courts. 11 C. C. A. 72.
Constitutional and statutory limitations of municipal indebtedness. 36 C. C. A. 6.
Statutory exemptions of building and loan associations from operation of usury laws. 36 C. C. A. 343.
Repeal of statutes by implication. 38 C. C. A. 136.
Power of legislature to pass curative statutes. 39 C. C. A. 180.
Amendment of amended, repealed, or invalid statutes. 44 C. C. A. 590.
Effect of violation of statutes limiting speed of trains. 59 C. C. A. 5.
Construction of statutes as affected by mistakes in writing, grammar, spelling, and punctuation. 65 C. C. A. 237.
History and passage of statutes and contemporary circumstances as aids to construction. 65 C. C. A. 535.
Pleading private statutes. 67 C. C. A. 241.
Construction and operation of provisos, exceptions and saving clauses. 76 C. C. A. 381.
Validity of laws alleged to impair charter or franchise of corporation as dependent on reservation of power to alter or amend. 77 C. C. A. 281.

STOCKHOLDERS.
Liability to creditors of corporation. 23 C. C. A. 315; 33 C. C. A. 23.
Enforcement of statutory liability of stockholders in national banks. 52 C. C. A. 6.

Digitized by Google

STOCKHOLDERS—Cont'd.
Effect of judgment against corporation in action to enforce stockholder's liability. 52 C. C. A. 305.
Liability of transferrors and transferees of corporate stock for assessments. 61 C. C. A. 322.

STREET RAILROADS.
Care required of motormen. 40 C. C. A. 361.
Relative rights of street railroads, and vehicles and pedestrians in use and occupation of streets. 73 C. C. A. 12.

SUBROGATION.
To rights of mortgagee. 42 C. C. A. 304.
Of insurer under assignment of rights of insured. 65 C. C. A. 615.

SUICIDE.
As a defense to a suit for life insurance. 16 C. C. A. 623; 28 C. C. A. 284.

SUNDAY.
As dies non juridicus. 12 C. C. A. 462.

SUPREME COURT.
Certiorari to circuit court of appeals. 1 C. C. A. 5.
Jurisdiction. 1 C. C. A. 9, 11.
Review of jurisdiction of circuit courts. 48 C. C. A. 351.

TARIFF LAWS.
Interpretation of commercial and trade terms. 18 C. C. A. 545.

TAXATION.
Of railroad land grants. 4 C. C. A. 196.
Of equitable title to public lands. 4 C. C. A. 196.
Lands of the United States not subject to state taxation. 4 C. C. A. 196.
Due process of law. 8 C. C. A. 398.
Notice of equalization. 8 C. C. A. 400.
Forfeiture for nonpayment. 8 C. C. A. 401.
Regulation and taxation of interstate commerce by state. 8 C. C. A. 492; 24 C. C. A. 21.
Limitations of taxing power from mutual independence of federal and state governments. 23 C. C. A. 515.
Of foreign corporations. 24 C. C. A. 13.
Tax deed as color of title. 24 C. C. A. 402.
Of intangible property of nonresidents. 31 C. C. A. 467.
Persons entitled to injunction restraining or damages for wrongful enforcement of tax. 54 C. C. A. 550.
Of bank deposits. 60 C. C. A. 413.
Impairing obligation of contracts for exemption from taxation. 70 C. C. A. 294.

TAXATION—Cont'd.
Place of taxation of property held in trust or other fiduciary capacity. 72 C. C. A. 283.

TELEGRAPHS AND TELEPHONES.
Measure of damages in actions against telegraph and telephone companies. 15 C. C. A. 235; 28 C. C. A. 59.
Damages for mental suffering from delay in delivering telegram. 11 C. C. A. 571; 15 C. C. A. 250; 28 C. C. A. 62.
Delay in transmission of message—Failure to disclose that line was not in working order. 14 C. C. A. 177.
Rights of telegraph and telephone companies to use of streets. 44 C. C. A. 155.

TENANCY IN COMMON.
Rights of co-tenant as to improvements made under mistaken belief of perfect title. 69 C. C. A. 19.

TERRITORIES.
Effect of acquisition of territory by United States on laws and property rights therein. 80 C. C. A. 457.

THREATENING POSTAL CARDS.
Nonmailable matter. 30 C. C. A. 94.

TITLE.
Rights of co-tenant as to improvements made under mistaken belief of perfect title. 69 C. C. A. 19.
Transfer of title as dependent on appropriation by seller. 83 C. C. A. 470.

TITLE INSURANCE. 19 C. C. A. 278.

TORTS.
Liabilities of carriers for negligence and torts of servants. 10 C. C. A. 466; 27 C. C. A. 651.
Of wife—Liability of husband. 12 C. C. A. 196.
Municipal liability for torts of public officers. 14 C. C. A. 534.
As affecting demurrage. 21 C. C. A. 345.
Maritime liens for torts. 34 C. C. A. 565.
Liability of corporation for torts. 39 C. C. A. 9.
Liability of principal for torts of agent. 43 C. C. A. 316.
Liabilities of charitable institutions for negligence. 47 C. C. A. 134.
Admiralty jurisdiction. 62 C. C. A. 279.
Effect of acquittal in criminal prosecution on liability in tort for alleged criminal act. 79 C. C. A. 407.

TRADE-MARKS AND TRADE-NAMES.
Contracts relating to use. 14 C. C. A. 104.

Digitized by Google

TRADE-MARKS AND TRADE-NAMES—Cont'd.
Assignment of right to use a person's name. 17 C. C. A. 579; 27 C. C. A. 360.
Right to use one's own name. 17 C. C. A. 579; 27 C. C. A. 357.
Use of corporate and firm names. 17 C. C. A. 579; 27 C. C. A. 357.
Use of geographical names. 17 C. C. A. 657; 35 C. C. A. 242.
Unfair competition. 20 C. C. A. 165; 30 C. C. A. 376.
Laches as a defense in suits for infringement. 22 C. C. A. 211; 36 C. C. A. 613.
Misleading or false labels. 29 C. C. A. 250.
Abandonment. 33 C. C. A. 294.
Arbitrary, descriptive, or fictitious character of trade-marks and trade-names. 50 C. C. A. 323.

TRADE SECRETS.
Disclosure. 58 C. C. A. 8.

TRESPASS.
Rights of trespasser on train. 31 C. C. A. 76.
Liabilities of corporations. 39 C. C. A. 15.
Liability of railroads or street car companies for ejection of trespassers. 51 C. C. A. 578.
Negligence in ejecting trespasser under disability. 62 C. C. A. 422.

TRIAL.
Jury trial in federal court. 5 C. C. A. 603; 26 C. C. A. 528; 27 C. C. A. 393.
Instructing jury and receiving verdict on Sunday. 12 C. C. A. 462.
Comments of counsel on failure to produce witness. 13 C. C. A. 589.
Trial by jury in criminal prosecutions. 39 C. C. A. 275.
Additional proofs in appellate court without trial de novo. 67 C. C. A. 600.
Operation and effect of motions by both plaintiff and defendant for direction of verdict. 77 C. C. A. 8.

TRUSTEES.
Citizenship as affecting the jurisdiction of the federal courts. 10 C. C. A. 252; 27 C. C. A. 300.

TRUSTS.
Assets of corporation when trust fund for creditors. 23 C. C. A. 315.
Place of taxation of property held in trust or other fiduciary capacity. 72 C. C. A. 283.

UNITED STATES.
Estoppel against. 16 C. C. A. 353.
Assignment of claims and government contracts. 22 C. C. A. 650.

UNITED STATES—Cont'd.
Nature and extent of power of United States to condemn property for public use. 70 C. C. A. 653.
Effect of acquisition of territory by United States on laws and property rights therein. 80 C. C. A. 457.

USURY.
Statutory exemptions of building and loan associations from operation of usury laws. 36 C. C. A. 343.
What law governs usury by building and loan associations. 51 C. C. A. 319.

VENDOR AND PURCHASER.
Marketable title. 40 C. C. A. 592.
Liabilities of venders of injurious substances or defective machinery and appliances for injuries to persons other than immediate vendees. 57 C. C. A. 5.
Right of vendor seeking specific performance of contract to have title perfected pending suit. 80 C. C. A. 354.
Deficiency judgments and personal liability on foreclosure of vendors' liens. 82 C. C. A. 488.
Necessary and proper parties in suits to foreclose or enforce vendors' liens. 83 C. C. A. 359.

WAIVER.
Of prepayment of insurance premiums. 13 C. C. A. 292.
Of maritime liens. 17 C. C. A. 102.
Of conditions of insurance. 27 C. C. A. 46.
Of defense by acceptance of premiums. 33 C. C. A. 369.
Of trial by jury in criminal prosecutions. 39 C. C. A. 281.
Of right as to district in which suit may be brought. 52 C. C. A. 192.
Of right to remove cause to federal court. 66 C. C. A. 612.

WAR.
The neutrality laws. 28 C. C. A. 622.

WAREHOUSEMEN.
Liability of carriers as. 20 C. C. A. 529.

WATERS AND WATER COURSES.
Pollution of water courses. 37 C. C. A. 538.
Abandonment of water rights. 45 C. C. A. 190.

WIFE.
Death of husband by wrongful act—Damages. 1 C. C. A. 33.
Liability of husband for torts of. 12 C. C. A. 196.

Digitized by Google

WILLS.
Probate jurisdiction of federal courts. 36 C. C. A. 276.

WITNESS.
Competency in federal courts—Following state practice. 5 C. C. A. 602; 21 C. C. A. 278.
Method of summoning — Following state practice. 5 C. C. A. 602.
Comments of counsel in argument on failure to produce. 13 C. C. A. 589.
Competency of, as to general reputation. 53 C. C. A. 109.
Misconduct of witness with reference to cause on trial as ground for impeachment. 71 C. C. A. 411.

WITNESS—Cont'd.
Time for objection to competency of witness. 74 C. C. A. 3.
Impeachment and contradiction of party called as witness by adversary. 74 C. C. A. 142.
Excuses for disobedience of subpœnas. 76 C. C. A. 591.
Right of accused to be confronted by witnesses. 80 C. C. A. 116.

WRITS.
Form and service of process. 5 C. C. A. 594.
Issue and service on Sunday. 12 C. C. A. 462.

Digitized by Google

NOTES IN THIS VOLUME.

Page

Existence of Custom or Usage as Question for Jury..... 9

What Law Governs Insurance Policies..... 100

Rights and Liabilities of Seamen as to Medical Treatment..... 186

Statutory Exemptions of Shipowners from Liability..... 294

Necessary and Proper Parties in Suits to Foreclose or Enforce Vendors' Liens on Realty..... 359

Transfer of Title as Dependent on Appropriation by Seller..... 470

Sufficiency of Presentation, Service, or Filing of Claims for Personal Injuries, or Notice Thereof, as Condition Precedent to Actions Against Municipal Corporations..... 559

Digitized by Google

CASES

ARGUED AND DETERMINED

IN THE

UNITED STATES CIRCUIT COURTS OF APPEALS.

(154 Fed. 296.)

NEW ROADS OILMILL & MFG. CO., Limited, v. KLINE, WILSON & CO.

(Circuit Court of Appeals, Fifth Circuit. June 3, 1907.)

No. 1,583.

1. CUSTOMS AND USAGES—CONTRACTS—CONSTRUCTION—QUESTIONS FOR JURY.

Whether a trade custom or usage is established by the evidence in a case, and, if so, whether it was known to a party contracting, or was so general and well established that he must be presumed to have known of and contracted with reference to it, are questions for the jury.[1]

2. SAME.

It is competent for the parties to a contract to exclude a usage therefrom, and in order that a usage may be read into a written contract it must be consistent with the terms of the writing.

[Ed. Note.—For cases in point, see Cent. Dig. vol. 15, Customs and Usages, §§ 29, 34.]

3. SAME—KNOWLEDGE OF USAGE.

The usage of a trade being always eligible to supersede the ordinary or public meaning of words as used in a contract, it is merely a question for the particular case whether the parties have in fact spoken according to that standard, and, if one of the parties was not a member of the trade or circle in which the usage obtained, his actual knowledge of it as applicable to the transaction must be shown before it can be inferred that he contracted with reference thereto.

[Ed. Note.—For cases in point, see Cent. Dig. vol. 15, Customs and Usages, §§ 23, 24.]

4. SAME.

Defendant, which had recently built a mill for the crushing of cotton seed at New Roads, La., authorized a broker in New Orleans by telegraph to sell for it a quantity of oil cake for future deliveries "F. O. B. New Roads," at certain prices which had been quoted by the broker as prevailing in the market. The broker negotiated a sale to plaintiff, and wired defendant for its acceptance, which was also sent by wire. On receipt of the sale contract, defendant refused to execute the same, because

---

[1] See note at end of case.

Digitized by Google

it provided for delivery of the cake at a shipping port. In an action to recover damages for breach of the contract, plaintiff claimed that the delivery provided for in the contract was in accordance with the usage of the market and the rules of the International Cottonseed Crushers' Association, of which, however, defendant was not a member. *Held*, that the question whether a contract of sale binding on defendant was made by the correspondence and acts of the broker, in view of the evidence as to usage, was one for the jury.

In Error to the Circuit Court of the United States for the Eastern District of Louisiana.

M. T. Hewes, for plaintiff in error.

John Clegg and Lamar C. Quintero, for defendant in error.

Before PARDEE, McCORMICK, and SHELBY, Circuit Judges.

McCORMICK, Circuit Judge. The assignment of errors in this case submits: (1) The lower court erred in permitting the plaintiffs to amend their petition after issue had been joined; (2) in overruling the peremptory exception to the jurisdiction of the court; (3) in refusing to instruct the jury, as requested by the defendant, etc.; (4) in instructing the jury, at the request of plaintiffs' counsel, to return a verdict for the plaintiffs; (6) in rendering judgment against defendant upon the facts presented.

We conclude from our study of the record in this case that only the fourth and sixth of these specifications of error merit our attention. These require consideration of the pleadings and of all of the proof, and justify a statement of the features of the evidence in some detail.

Conforming to the practice in Louisiana, the action was begun by petition. It alleges that on the 26th of August, 1902, the petitioners purchased of the defendant company 1,500 tons, of 2,240 pounds each, prime cotton-seed cake for the shipments and prices specified; also that the defendant executed a written contract made an exhibit to the petition (set out in our recitals of the proof); that after having made the contract with the defendant they sold the November shipment to be delivered to Barron & Bodenheimer at a safe port in Danish Denmark, and the first half and last half of December shipment was sold for delivery to Otto Monstrom, Alborg, Den.; that defendant failed to make deliveries; that they, at the period of each default, purchased like goods in the open market at a cost to them of $2,700 more than they had contracted to pay to the defendant for the goods bought of it. The defendant denied, generally and severally, all and singular the allegations of the petition.

The defendant, a corporation—which we will refer to as "the company"—was organized under the laws of Louisiana, in 1902, and was erecting its plant at New Roads, situated on the Texas & Pacific railroad, about 120 miles from New Orleans. The plaintiffs below—whom we will refer to as "the petitioners"—were engaged in general business in New Orleans, and P. J. Strouse was manager, with full authority over and sole control of the cotton-seed product department of their business, buying such goods for them and selling it to parties in Europe. R. C. Burke was a broker engaged in the cotton-

Digitized by Google

seed product business, with his office in New Orleans. In August, 1902, the mill of the company was not ready to begin operation. The company was buying seed and building its mill. Burke commenced soliciting its business as early as July 15th, and continued sending his soliciting letters and literature up to August 21, 1902, when he received a letter from the company advising him that it felt disposed to sell some cake and oil for the last half of November and December shipment; that it desired to know the best he could do on same, and also to whom sales would be made, and whether the parties were responsible or not, as the officers of the company were strangers in that territory. To which Burke replied, August 22, 1902:

"I beg to acknowledge your favor of the 21st and note that you feel disposed to sell some cake and oil for the last half of November and December shipment, also that you desire to know best I can do on same, and also to whom sales are to be made; whether the parties are responsible or not, as you are strangers in this territory. Answering the latter, I beg to advise that you can thoroughly rely on the responsibility of any buyer to whom I sell your stuff. I do business with every responsible and reliable buyer in this market, and consequently cannot name any particular one to whom I might sell your product, as this depends entirely on the market the day I make sales; some time one buyer, then again another is in at the better price, and I work to secure the fullest price for my mill; but if you desire the name of the buyer in each case I will furnish same to you as soon as trade is closed. Your statement that you desire to sell some cake and oil for last half November and December shipment is a little vague, as I do not know just how much you care to offer, and how much will be shipped each month. For instance, on today's market for November I can quote about $24.50, subject unfilled, and for December $24.00, and this might be bettered slightly if the December stuff were first half shipment. The same applies in the case of the oil; I don't know how much you want to sell nor how much each shipment. As I am desirous of starting business for your account with a good sale, I would suggest that on receipt of the present you wire me promptly advising how much cake you want to offer last half November, and how much first half of December. The same in the case of the oil and then I will be in a position to bid you firm on same, and besides get you a better price than if I just offered your stuff last half November, first half December. Kindly intimate also what price you expect to get, as I find by approaching the buyer with a firm offer that much better results can be obtained, because, even while he may not accept at the price named, he will come back with a counter, which is generally a bit higher than if you asked him for a bid in the first place. Now, gentlemen, I am very anxious to handle your business, and want to get satisfactory results, so ask that you let me hear from you promptly by wire, and I feel sure we can pull off a trade."

In reply to this letter, the company wired Burke (August 25th):

"We offer prices mentioned your letter twenty-second or better, F. O. B. New Roads, fifteen hundred tons cake, as follows: five hundred last half November, five hundred first half December, five hundred last half December; also fifteen tanks oil, sixty-five hundred gallons each, as follows: five tanks last half November, five tanks first half December, five tanks last half December."

On the morning of the 26th Burke wired the company:

"Telegram received. Accept five hundred prime cake November twenty-four seventy-five; five hundred first half December, twenty-four quarter; five hundred last half December, twenty-four, all per long ton, shipside Westwego. Confirm. Will work oil to-morrow."

In the afternoon Burke wired again:

"Can't work oil. Market dead. Answer my wire regarding cake."

Digitized by Google

He also wrote the company:

"I beg to acknowledge receipt of your telegram of yesterday evening. Same was not received by me until about seven or seven thirty in the evening, at my residence. I left my office about five thirty or five forty-five and it had not been delivered then. Your wire was as follows: [Here reciting the wire from the company given above.] Upon receipt of same I went down town and looked up some of my buyers and succeeded in getting bids on same somewhat better than indicated in my letter of the 22d. My wire read as follows: [Here he recites his wire.] All of which I now confirm and await your confirmation in the premises. I note in your telegram that you state 'we offer prices mentioned your letter twenty-second, or better, F. O. B. New Roads, &c., &c.,' which I do not quite understand, in so far as the term 'F. O. B. New Roads' is concerned, as our quotations are based on shipside prices per long ton, unless otherwise stipulated. I suppose you meant the shipments were to be for the time specified F. O. B. New Roads, and not for delivery. In any event I await your telegram in the premises, and will wire you later on oil."

In this letter he enclosed what we may term a "broker's sale note," as follows:

"New Orleans, August 26, 1902. New Roads Oil Mill & Manufacturing Company, Ltd., New Roads, La.—Gentlemen: I have this day sold for your account to Kline, Wilson & Co., of New Orleans, La., fifteen hundred (1500) tons of 2,240 lbs. each, prime cottonseed cake, for the shipments and prices named below: five hundred tons November shipment, at twenty-four seventy-five ($24.75) per long ton, delivered shipside Westwego, La.; five hundred tons first half December shipment at twenty-four twenty-five ($24.25) per long ton, delivered shipside Westwego; five hundred tons lasts half December shipment, at twenty-four dollars ($24.00) per long ton, delivered shipside Westwego, La. Weight and quality guaranteed by seller. Terms: S-D bill-lading attached. Brokerage of 12 1-2 cents per long ton to be paid me by you in consideration of the above contract, subject to the rules and regulations of the Interstate Cottonseed Crushers' Association."

Before this advice by mail was or could have been received by the company, it wired Burke, August 26, 1902:

"Telegram received notifying us sale of cake, which we confirm."

On the next day (27th) Burke wrote the company:

"I beg to confirm my wire of yesterday afternoon in reference fifteen tanks of oil [reciting his second wire]. * * * I beg to acknowledge your wire of yesterday afternoon confirming sale of fifteen hundred tons of cake. * * * The buyer is Kline, Wilson & Co. of this city, one of the most responsible buyers of this market. I inclose contract in duplicate, covering the sale, one copy of which please sign and return to my buyers' files."

The contract sent in duplicate is the Exhibit A annexed to the petition, and substantially followed the broker's sale note set out above, with this addition at the foot:

"Accepted. P. pro Kline, Wilson & Co. P. J. Strouse."

This contract in duplicate was promptly returned by the company, with the following letter in reference thereto.

"We are in receipt of your letter of the 27th ult., inclosing duplicate contract to sell Kline, Wilson & Co. fifteen hundred tons of cake. We sold this cake F. O. B. New Roads, as you will see by reference to our telegram, but we note that the contract reads delivered shipside Westwego, La. Please change same to conform with the terms of our sale and return same to us and we will take pleasure in executing same. Asking your prompt attention to this matter, we remain—."

Digitized by Google

To which Burke responded:

"I beg to acknowledge your favor of the 30th, and note you return contract asking that same be changed to conform to the terms of your sale, which was F. O. B. New Roads. Now, gentlemen, I am in doubt as to what you mean by the above. [He then recites the course of their dealings at length, and concludes:] Now, gentlemen, I have gone into the matter thus fully to show you that the contract as forwarded to you is correct in every particular, and I return to you for your acceptance. I trust that the matter is as I suppose it is, and as mentioned above, but in any event you can readily see that my buyer considers the matter closed, and of course holds to the conditions of sale. I have no doubt that you will see the matter in its proper light and will return the contract properly signed. I regret that when your Mr. Fitzhugh was in here the other day this matter did not arise, but I showed him copy of contract, but whether he noted same or not I do not know; in fact, I do not believe he did. Kindly sign one copy and return for my buyers' files."

To this the manager of the company replied:

"We will adhere to our original position and refuse to confirm the sale, because not made in accordance with our telegram. You were acting as our agent in this matter and had no right or authority whatever to change or alter our proposition in any particular. You had been in correspondence with us and had quoted us certain prices on our cake. You did not say that to get this price it was necessary for us to deliver our cake to Westwego, New Orleans or Hamburg, nor did you say whether the cake was loose or sacked. I authorized you to sell fifteen hundred tons F. O. B. New Roads, at a certain price, intending to deliver loose cake. Instead of making me a counter offer at about two dollars less than the price I authorized you to sell, you made the sale at that price and wired back as follows: 'Telegram received. Accept five hundred, etc., etc.' I did not understand the meaning of the last part of your telegram, as I had never heard of Westwego, but supposed it related to some detail of shipping which would be explained in your letter. I had no idea it was intended to reduce our price nearly two dollars per ton. The beginning of your telegram showed that you had received my telegram of instructions. Immediately following you use the word 'accept.' Then follows a statement of the amount of cake offered by us. This led me to believe that you had acted in accordance with our instructions. You had no right to accept on any other terms than those mentioned by us. Now, regarding your statement that the price mentioned by me was ridiculous, beg to remind you of the fact that we have a right to put any price on our cake that suits us. You have an equal right to buy or let it alone. In conclusion, we would remind you of the fact that before a trade can be closed a mutual understanding must exist. From your letter it is very evident that such has not been the case with us, and consequently there can be no trade. Referring to your letter of the 25th ult. [26th, inclosing sale note?], would say that I never received that letter until my return from New Orleans. I regret very much that you did not explain this transaction while I was there. I also regret that in my first attempt to do business with you, so serious a misunderstanding has arisen. We herewith return your contracts, which we refuse to accept and decline to confirm your sale."

On the contracts thus the second time returned, the company indorsed in the margin:

"We will accept this sale if made to read F. O. B. New Roads, La., at the prices mentioned herein, cake to be delivered loose."

On September 9th Burke wrote, and appears to have placed in the hands of petitioners (i. e., Strouse) for delivery, the following letter:

"New Roads Oil Mill & Manufacturing Co., Limited, New Roads, La.—Gentlemen: I beg to acknowledge your favor of the 6th inst., and in this connection beg to advise that I have turned over to my buyers, Messrs. Kline,

Digitized by Google

Wilson & Co. of this city, all the telegrams and correspondence relating to the sale of 1500 tons cake to them. My buyer will take up this matter direct with you, and I trust you will come to an amicable understanding."

Of even date therewith the petitioners (Strouse) took up the correspondence with the company, and, after reviewing the different steps of the negotiation, say:

"When we made this transaction we acted in good faith, and presumed you were acting likewise. In a spirit of fairness to all concerned, we will offer you to leave this matter to arbitration (specifying mode), or if you prefer we will leave the matter to the arbitration committee of the Interstate Cottonseed Crushers' Association, of which you are perhaps members."

To this the company replied:

"We note you have from Mr. Burke all the correspondence and telegrams relating to the transaction referred to by you. It will therefore be unnecessary for us to review the details of this transaction, as you already have them. You already know the position we take in this matter. We regret very much that Mr. Burke misunderstood us and that we misunderstood him, but it is one of those unfortunate occurrences which sometimes happens to strangers. * * * We are glad to know that you have not been injured, as cake is worth less now than at the time we made our offer and will probably be worth still less in November and December. We have never yet heard from Mr. Burke nor do you state whether you thought you were buying loose or sacked cake. It was our intention to furnish loose cake."

It is unnecessary for us to make further reference to the written evidence. We will notice briefly some of the features of the oral testimony. Burke said that he "kept them (the petitioners; i. e., Strouse) informed of the transactions as they came up." Asked at what price he had bought cotton-seed cake between the 1st and 9th of September for November and December delivery, he said he did not buy any for November and December delivery. Asked were there not any published quotations at that time, he said: "I do not think there were any published quotations, excepting quotations for current periods." Strouse testified:

"In the latter part of August some time, one evening after dinner, Mr. Burke rung me up and asked me if I was in the market for some cotton-seed cake, and I told him I was, and gave him the prices that I was willing to pay, and he then told me he had a telegram from the New Roads Oil Mill Company, and gave me the prices, which were five hundred tons last half November shipment, $24.75; five hundred tons first half December shipment at $24.25; and five hundred tons last half December shipment at $24; and I told him that I could not very well pay those prices; that I could pay $24.50 for last half November shipment, and $24.25 and $24 for first half December and last half December shipment; and after talking over the matter for a while I decided to buy the cake, and gave him the offer at $24.75, $24.25 and $24, for the three shipments named, respectively, and he made out the telegram and read it to me through the phone that he was offering the New Roads Company, and they were named in the telegram."

Strouse identified the telegram first sent by Burke (as we have recited it) as the one read to him before its being sent, and said that Burke also showed him the company's telegram dated August 26th; that he considered the trade closed the moment he saw that telegram, and entered it upon his books accordingly, and "applied it against his sales on the other side." Being called by the defendant, he testified:

Digitized by Google

"I did not make any sales between August 26th and September 1st; none at all. We sell only to foreign markets. On August 22d we sold thirty-five hundred tons to Barron & Bodenheimer, to be shipped from New Orleans in October and November; and on August 21st sold to Otto Monstrom fifteen hundred tons for December shipment."

Being asked how many purchases of cotton-seed cake he made between August 26th and September 1st, he said, "None at all."

Touching the matter of damages, in order to show the prices at which cotton-seed cake could have been bought on and after September 1, 1902, for November and December delivery, the defendant offered the testimony of witnesses who had had dealings in cotton-seed meal, with only one transaction in cotton-seed cake during the period, which evidence tended to show that there was generally little or no difference between the value in the market of cotton-seed meal and cotton-seed cake; that cotton-seed meal was produced by the mill first making the cake and then crushing the cake; but the court, on objection by petitioners' counsel, excluded such evidence and held that only evidence of the price of cake could be heard. There is no evidence to show that any of the parties to this negotiation were members of the Interstate Cottonseed Crushers' Association at that time. It is shown that the manager of the company was not a member and knew nothing of the rules of the association. No effort was made or evidence offered to show explicitly what were the rules of that association.

The proof shows that the freight rates from New Roads to Westwego were about $1.90 per ton. The manager of the company testified:

"We sack very little cake. It is generally estimated that there is a difference of $1.25 to $1.50 per ton between the price of loose cake and cake in sacks."

Some customs are so well established and so universally recognized as to have become a part of the law of the land, and a party will not be heard to allege his ignorance of them. Others, however, are so restricted as to locality or trade or business that ignorance of them is a valid reason why a party will not be held to have contracted in reference to them. Not only the existence of such a custom, but whether the knowledge of it exists in any particular case, are questions of fact for the jury. It is for them to determine, under proper instructions from the court, whether the evidence as to the existence, duration, and other characteristics of the custom, and as to knowledge thereof by the party therein, shows a custom of such age and character that the law will presume that the parties knew of and contracted in reference to it, or whether the custom is so local and particular that knowledge in the party to be charged must be affirmatively shown and may be negatived. Mechem on Agency, § 486.

A broker is one whose occupation it is to bring parties together to bargain, or to bargain for them in matters of trade, commerce, or navigation. He is essentially a middleman or go-between. Brokers are of many kinds, according to the particular class of transactions in which they engage. Id. § 13.

Digitized by Google

Evidence to show that there is not an agreement at all is admissible in cases where explanation of the terms of the contract is required, and in the introduction of usages into the contract. The usage must be consistent with the terms of the contract, for it is optional with the parties to exclude the usage if they think fit, and to frame their contract so as to be repugnant to its operation. A party will not be bound by a custom of the market of which he was not aware, and which altered the intrinsic character of the contract. Where the other party to the contract looks through the agent to the principal, whose name is disclosed (in the manner and to the extent shown in this case), the agent practically drops out of the transaction. Anson on Contracts, pp. 342–345.

Where a statement is made in the course of a correspondence, the rest of the correspondence must be admitted so far as it is connected with, or necessary to, a full understanding of what follows. This principle applies to admit a prior writing referred to, and the reference may be implied only. 3 Wigmore, § 2120.

The ordinary standard or "plain meaning" of language used in correspondence or other contract writing is simply the meaning of the people who did not write the document, and to insist that the language used in the writing must be given this "plain meaning" involves the fallacy of assuming that there is, or ever can be, some one, real, or absolute meaning. In truth, there can only be some person's meaning, and that person's meaning the law is seeking is the writer of the document. 4 Wigmore, § 2462.

The usage of a trade, or locality, or sect, or dialect, being always eligible to supersede the ordinary or public sense of words, it remains merely a question for the particular case whether the parties have, in fact, spoken according to that standard. Where all the parties are members of the same trade or other circle of persons, little difficulty can arise. The only requirement is that the special sense alleged should be, in fact, a usage or settled habit of expression, and not merely the expression of a few persons or of casual occasions. And, when one of the parties is not a member of a trade or other circle, his acceptance of the standard must be made to appear. For this purpose his actual knowledge of the particular sense as applicable to the transaction would suffice; otherwise it must appear to be so generally known in the community that his actual, individual knowledge of it may be inferred. The application of the general principle would then be simply a question of the probabilities of the meaning for each case. 4 Wigmore, § 2464.

We refrain from discussing questions which arose on the trial touching the matter of damages, as they may not arise hereafter, or at least present the same features.

We must strive to clear our minds of the confusion of thought that leads to the misuse of catch words and phrases and to the misapplication of familiar rules of evidence and settled principles of law. The writing in this case is not of that solemn character which in itself constitutes a contract between parties. At most, these telegrams and letters are only evidence tending to prove an agreement. The crucial question they present is, Did the parties reach an agreement? Other

Digitized by Google

questions may follow. We are constrained to conclude that under the common-law system of jurisprudence the trial court could not, on the evidence admitted, rightly solve these questions without the aid of the jury.

It is our opinion that the fourth and sixth errors assigned are well taken, and that the judgment should be reversed and the cause remanded for a new trial. And it is so ordered.

NOTE.

Existence of Custom or Usage as Question for Jury.

I. In General.

[a] The existence of a custom is a question of fact for the jury.
—(U. S. 1828) McLanaham v. Universal Ins. Co., 26 U. S. (1 Pet.) 170, 7 L. Ed. 98;
(Fla. 1885) Sullivan v. Jernigan, 21 Fla. 264;
(Ga. 1880) Branch v. Palmer, 65 Ga. 210;
(Ill. 1877) Chicago Packing & Provision Co. v. Tilton, 87 Ill. 547;
(Ind. 1874) Hitesman v. State, 48 Ind. 473;
(Me. 1843) Bodfish v. Fox, 23 Me. (10 Shep.) 90, 39 Am. Dec. 611;
(Mass. 1831) Paddock v. Franklin Ins. Co., 28 Mass. (11 Pick.) 227;
(Mich. 1856) Bourke v. James, 4 Mich. 336;
(S. C. 1879) Carolina Bank v. Wallace, 13 S. C. 347, 36 Am. Rep. 694;
(Wis. 1856) The Sultana v. Chapman, 5 Wis. 454.

[b] (Ill. 1883) A. sued B. for so ditching his land as to cast the water back on A.'s land. *Held*, that ordinarily, in such cases, it was a question of fact for a jury to say what might properly be done in accordance with good agricultural usage.—Knoll v. Mayer, 13 Ill. App. (13 Bradw.) 203.

[c] (Ill. 1902) What is sufficient usage to bind the parties is a question of law for the court; whether the facts claimed to constitute usage have been proved is a question of fact for the jury.—Currie v. Syndicate Des Cultivators Des Oignons a'Fleur, 104 Ill. App. 165.

[d] (Iowa, 1874) Where a carrier had uniformly accepted baggage deposited at a station without notice, whether a custom had been established rendering it liable for the loss of baggage so deposited was for the jury.—Green v. Milwaukee & St. P. Ry. Co., 38 Iowa, 100, reaffirmed in (1875) 41 Iowa, 410.

[e] (Iowa, 1896) The mere fact of a conflict in the testimony as to the existence of a usage or custom pleaded does not, as a matter of law, negative such custom; and if plaintiff has produced evidence which, when fairly and reasonably considered, would prove the alleged custom, the question is for the jury, under proper instructions.—Milroy v. Chicago, M. & St. P. Ry. Co., 98 Iowa, 188, 67 N. W. 276.

[f] (Iowa, 1902) It is not necessary, in order to prove a custom or usage, that the evidence should be "clear, uncontradictory, and distinct"; but if there is evidence of the existence of the usage, though conflicting, the question of its existence is for the jury.—Hichhorn v. Bradley, 117 Iowa, 130, 90 N. W. 592.

[g] (Ky. 1859) Where there is evidence to show a custom controlling the general rule as to delivery by a steamboat common carrier, its existence must be left to the jury, with instructions as to the requisites of such a custom.—Huston v. Peters, 58 Ky. (1 Metc.) 558.

[h] (Mass. 1851) The question whether a guest at an inn is aware of a custom requiring guests to leave their money or valuables at the bar or with the keeper or his clerk is one of fact for the jury.—Berkshire Woollen Co. v. Proctor, 61 Mass. (7 Cush.) 417.

[i] (N. J. 1899) When the facts and circumstances are undisputed by which a custom or usage is sought to be established, it becomes a question of law, for the court to determine, whether such usage has been proven or not.—Runyan v. Central R. Co., 64 N. J. Law (35 Vroom) 67, 44 Atl. 985, 48 L. R. A. 744.

Digitized by Google

[j] (N. Y. 1899) Not only the existence of a usage or custom, but whether a knowledge of it exists in any particular case, is a question of fact for the jury.—Scott v. Brown, 29 Misc. Rep. 320, 60 N. Y. Supp. 511.

[k] (Ohio, 1845) Until a custom is settled by adjudication or so established as to become a part of the law without proof, its existence is a question of fact for the jury.—Boyce v. The Empress, 1 Ohio Dec. 173, 3 West. Law J. 174.

II. USAGES IN TRADE OR AFFECTING CONTRACTS.

[a] (U. S. 1889) In weighing the testimony of witnesses as to trade usage, the jury should consider the extent to which any of the witnesses may have an interest in the result of the litigation which might color their evidence.—Dodge v. Hedden (C. C.) 42 Fed. 446.

[b] (U. S. 1843) A master and his vessel were employed near Canton, in China, in a service not strictly within their ordinary offices, and not, originally, in any way contemplated, the ship being used, by an arrangement with the agent of the owner at Canton, for 22 months, as an opium store ship, and, according to usage, a sum of $5 on each box was paid on the delivery of the opium, which was called a "kumshaw," and which was exclusive of the price paid for storage, and the "kumshaws" were paid to the master, with the acquiescence of the agent, there having been no express agreement made with respect to the same. *Held*, in a suit by the owner of the vessel against the master to recover the "kumshaws" as a part of the earnings of the vessel, that it should be left to the jury to say whether, by the usage of the trade, the "kumshaws" belonged to the master.—Wilcocks v. Phillips, Fed. Cas. No. 17,639 [1 Wall. Jr. 47].

[c] (Ala. 1887) Defendants contracted orally to deliver certain bacon to plaintiffs. On arrival, a portion was spoiled. On suit for breach of contract, they pleaded that they had offered to take back the spoiled bacon, and pay defendants its invoice value at the place of shipment; that, under the custom of the trade, the market value at the place of shipment, and not at that of receipt, was the measure of damages. *Held*, that the question whether there was such a custom should be left to the jury, under proper instructions.—Haas v. Hudmon, 83 Ala. 174, 3 South. 302.

[d] (Ala. 1906) A railroad contractor, who had contracted to do certain work, sought to recover for extra items of work he had done, and testified that all the extra items were necessary, and that with items of this kind it is the custom of railroad contractors to charge on the force account, which is actual cost, plus 10 per cent. *Held*, that the evidence was at least some proof conducing to show the custom, and that whether it was sufficient or not was a question for the jury, under proper instructions.—Henderson-Boyd Lumber Co. v. Cook, 42 South. 838.

[e] (Ind. 1861) The construction of a contract with reference to the intention of the parties, as derived from a usage or custom with reference to the meaning of particular words used therein, is for the jury.—Prather v. Ross, 17 Ind. 495.

[f] (Iowa, 1859) Where a merchant proved that it was his custom to consider all accounts due at the end of the year and to charge interest thereon from that time, and that such custom was known to defendant, whether such facts amount to an implied contract between the parties to pay interest was a question for the jury.—Veiths v. Hagge, 8 Iowa (8 Clarke) 163.

[g] (Me. 1843) Where a usage, regulating the compensation for a particular description of personal services, has been proved, the true question for the consideration of the jury is whether the usage was so generally known and acted on that the parties, from that and the other facts and circumstances proved, must be presumed to have had reference to it for the compensation to be paid; as, in such case, it would become, as it were, a part of their agreement, and binding upon them.—Bodfish v. Fox, 23 Me. (10 Shep.) 90, 39 Am. Dec. 611.

[h] (Md. 1856) Whether a usage or custom exists, and whether the parties contracted with reference to it, is a question for the jury, notwithstanding the fact that all the evidence as to the prevalence of the custom was introduced on one side.—Burroughs v. Langley, 10 Md. 248.

Digitized by Google

[i] (Md. 1860) Where evidence of usage and practice in a trade is admissible to explain an ambiguity patent on the face of the instrument, or shown by reference to extraneous circumstances, this evidence is for the jury under instructions from the court upon a case hypothetically stated.—Williams v. Woods, 16 Md. 220.

[j] (Mass. 1853) In answer to an inquiry, in an application for insurance on a factory, as to whether there were casks in each loft constantly supplied with water, it was stated that there were in each room casks kept full constantly. *Held*, that the question whether the word "room," as used among manufacturers, comprehended the entire loft or story appropriated to a particular department, though it might be divided by partitions, is one for the jury.—Daniels v. Hudson River Fire Ins. Co., 66 Miss. (12 Cush.) 416, 59 Am. Dec. 192.

[k] (Mass. 1872) Where a broker shipped his principal's merchandise to his correspondent in a foreign country, and drew drafts on them therefor, payable 60 days after acceptance, which drafts were discounted by the broker after acceptance, and were by him, on default of the drawee, paid and taken up, the question of whether or not such proceeding was a loan of the principal's money by the broker making him responsible for the value of the merchandise, or whether it was in accordance with the customs and usages of the broker's business, was for the jury.—Goldsmith v. Manheim, 109 Mass. 187.

[l] (Minn. 1901) Testimony of the existence of a certain general and uniform usage and custom in the community in which the parties lived and made their contract *held* sufficient to make a case for the jury on the issue as to whether such a usage and custom then and there existed.—Powell v. Luders, 84 Minn. 372, 87 N. W. 940.

[m] (Mo. 1886) Where there was evidence of a general and uniform custom among brokers to collect for margins on their customers' contracts in futures, the existence of such custom was a question for the jury, though there was some difference among the witnesses as to its extent.—Hill v. Morris, 21 Mo. App. 256.

[n] (N. H. 1906) It cannot be held, as a matter of law, that the evidence of retail fur dealers that a usage exists in the fur trade to make conditional sales to retailers is not sufficient to authorize a finding that such a usage exists.—Hess, Bases & Co. v. Shurtleft, 65 Atl. 377.

[o] (N. Y. 1862) A. agreed to sell and deliver to B. a quantity of soft English lead, to arrive by a specified vessel, designating the lead as "W., P. & W. Brand," and no lead so marked was known in the market as an article of commerce; but the lead on the vessel was manufactured by a firm, two of whose members were named W. and one P., known as W., P., W. & Co., and had been branded by them "W., P. & Co." *Held*, it was the province of the jury to determine, upon evidence as to the usage of trade, what was the intention of the parties.—Pollen v. LeRoy, 23 N. Y. Super. Ct. (10 Bosw.) 38.

[p] (N. Y. 1898) When both parties to an action have given evidence upon the trial, without objection, regarding the existence of a custom as to the meaning of the words "traveling salesman" in the written contract out of which the action arose, and also regarding conversations leading up to such contract, the questions of the existence of the custom and the meaning of the parties are properly submitted to the jury. Judgment (1894) 83 Hun, 611, 31 N. Y. Supp. 517, affirmed.—Bloom v. P. Cox Shoe Mfg. Co., 154 N. Y. 711, 49 N. E. 56.

[q] (N. C. 1878) What is the established commercial usage in respect to a certain course of dealing among merchants in a particular business is a question for the jury.—Bank of New Hanover v. Williams, 79 N. C. 129.

[r] (N. C. 1898) A contract with plaintiff mining company provided that defendant was to smelt the ore furnished, at $10 per ton, and to pay to plaintiff 95 per cent. of the silver produced. By another clause it was agreed that defendant should not be called on to pay plaintiff the 95 per cent. of silver "produced from the ore as aforesaid" until a certain time. It was contended by plaintiff that the ores were to be paid for at assay value, according to a custom among smelters, and not on the basis of the silver actually produced by the smelting process. *Held*, that the contract was not ambiguous, and

Digitized by Google

hence should be construed by the court, and it was error to submit to the jury the question of the existence of such a custom among smelters.—Silver Val. Min. Co. v. North Carolina Smelting Co., 122 N. C. 542, 29 S. E. 940.

[s] (Ohio, 1877) It is for the jury to decide as to what may be the usage or manner of dealing among men in cases like the one at bar; but whether such usage has the force of custom as governing the rights of the parties is for the court.—Nolte v. Hill, 2 Wkly. Law Bul. 86.

[t] (S. C. 1851) A. advanced to B. a certain sum on cotton shipped to Bremen, and brought this action to recover the amount in which the net proceeds fell short of the sum advanced. In the account rendered by A. against B. were a multitude of small charges besides commissions, such as bill brokerage and interest thereon, for mending, handling, delivering, etc. A verdict was rendered for the whole amount. *Held*, that the right to make such charges depended so much on commercial usage that the question was properly submitted to the jury.—Kuhtman v. Brown, 4 Rich. Law, 479.

(153 Fed. 970.)

THE W. N. BAVIER.

THE H. M. WHITNEY.

(Circuit Court of Appeals, Second Circuit. April 13, 1907).

No. 157.

COLLISION—TOW AND MEETING STEAMER—IMPROPER NAVIGATION BY TUG.

A collision in East river between a canal boat, which was one of four in tow of a tug passing down on an ebb tide, and a steamer passing up on the Brooklyn side of the center of the channel, *held* due to the fault of the tug, which, after exchanging the proper passing signal of one whistle with the steamer and properly porting her helm for a time, starboarded it again when about the center of the channel, allowing her tow to sag to port with the tide and against the steamer. The steamer *held* not in fault because of her violation of the East river statute, which required her to keep in the middle of the channel, since it in no way contributed to the collision, nor because she did not go still further to starboard than she did; her change of course being sufficient for safe passage if the tug had continued to co-operate, as she had the right to assume would be done after the exchange of signals.

[Ed. Note.—Signals of meeting vessels, see note to The New York, 30 C. C. A. 630.]

Appeal from the District Court of the United States for the Southern District of New York.

This cause comes here upon appeals from a decree of the District Court, Southern District of New York, which held both vessels in fault for a collision between the Whitney and libelant's canal boat Emergency, in tow of the Bavier, which happened in the East river opposite Wallabout Bay, and to the south of Corlear's Hook, August 16, 1904, at about 6 p. m.

Amos Van Etten, for the Bavier.

H. Putnam and Wing, Putnam & Burlingham, for the Whitney.

J. K. Symmers and Carpenter, Park & Symmers, for appellee.

Before LACOMBE, TOWNSEND, and COXE, Circuit Judges.

LACOMBE, Circuit Judge. The Bavier had four boats in tow, made up in two tiers astern on a hawser of about 100 feet; the Emer-

Digitized by Google

gency being the port boat on the second tier. The entire distance from the tug's bow to the last boat was about 380 feet. As we have already held in The A. W. Booth, 138 Fed. 303, 70 C. C. A. 593, no fault can be charged against the Bavier because of the length of her tow; but she was bound to navigate with a degree of care commensurate with the risk thereby incurred. All the boats in the tow were light. They had no steering apparatus of their own, but were dependent on the direction of the hawser for their steering. The tug left Rivington street, bound for Fifty-First street, North river, with this tow heading up river, and rounded to until she headed down river; the tide being ebb. The steamship was bound up the river for Boston. The collision happened to the eastward of midchannel —about two-thirds of the way over towards Brooklyn, the district judge finds, and the clear weight of evidence supports that finding.

Accordingly to the story of the master of the Bavier, he was a little to the eastward of mid river when he saw the Whitney. He had brought his tug nearly into position, but his tow, under the influence of the ebb tide, which has a set towards Brooklyn, was tailing over more to the eastward. The Bavier was under a port helm. She was about off Jackson street, when he saw the Whitney coming up about off Gold street, and nearer to the Brooklyn shore than his tug was. The Whitney blew one blast, and he answered it with one. The navigation thus announced by both boats was proper. They were meeting in the first position (article 18, rule 1 [U. S. Comp. St. 1901, p. 2881]), and their courses were not on the starboard of each other. It was their duty to pass port to port. As soon as whistles were exchanged the master of the Bavier put his wheel harder to port, in order to pull his tow over out of the way. The distance between the two vessels was ample when whistles were exchanged, and, had he kept his port wheel, the Whitney cooperating, there was no reason why the steamship and tow should not have passed each other with a reasonable margin of safety. The disaster is sufficiently accounted for by his admission that after he had been heading well over to the New York shore, until "he thought his tow would go clear," he starboarded and headed straight down the river, although he admits that his tow was "a little to the eastward of the middle of the river." This was apparently at the very place where the course of the river changes nearly from S. W. to W. The natural result was that the tow, relieved of pull to the westward, swung down with the tide upon the Whitney.

The master of the Bavier evidently appreciated that his change of helm brought the vessels into collision; for he undertook to explain it by the presence of another vessel, which he alleges interfered with him. This was a New York, New Haven & Hartford car float, which was coming up about abreast of the Whitney. He says he pulled under the port wheel as near the float as he could, as near as he thought safe; that he did not want to pull across the float's bow, and therefore starboarded. A majority of the court are not disposed to credit this excuse. He admits that his tow was to the Brooklyn side of mid river, and the most he claims for his own position is mid river. We are of the opinion that he had not reached mid river;

Digitized by Google

but, for the purpose of the argument, it may be assumed that his statement is correct. He says that, when he first saw this craft, a tugboat (the Dunne) was coming up with a lumber barge on each side of her, about 75 to 100 feet off the New York shore, and that the car float, with her tug, was about 30 to 50 feet outside the Dunne; that there was easily 1,000 feet between the car float and the Whitney, and that the car float and tow did not come out over towards the Whitney, but "kept in to the New York side, where they belonged." If he himself were in mid river, he was at a considerable distance from the car float. Moreover, according to his story, he kept on a considerable time heading for the tug and car float in full sight of them, until he got within 50 feet, but received no signal from them, and blew them none. Appreciating the weakness of this excuse he also said that he starboarded in order to slew his tow, an excuse quite as unsatisfactory. We are of the opinion that he was in fault for not continuing under his port wheel until he had brought his tow to mid river.

A majority of the court are also of the opinion that the Whitney was not in fault. She was coming up the river well over towards the Brooklyn side, presumably on account of the ebb tide. But, if she were in fault for not navigating nearer the center of the river, under the East river statute (section 757, c. 410, p. 211, of the New York City consolidation act of 1882), such fault in no way contributed to the accident. The boats met in the first position, end on, or nearly so, and not on each other's starboard bow, and exchanged signals when at a sufficient distance to insure passing in safety, if both navigated in conformity thereto. As we have seen, the Bavier did not so navigate. After porting, she starboarded, and thus let her tow sag down, where it would not have been had she continued under a port wheel. The Whitney ported, and (except just before collision, when she starboarded to regain control lost by backing) kept changing her course to starboard. It is probably true that she might have gone still further to starboard without running into the Navy Yard piers, and might have passed to the eastward of the tow, even if the Bavier had not ported at all. But the vessels had exchanged signals, which indicated that the Bavier would haul to starboard, and the latter was seen to be hauling over towards New York. The master of the Whitney was entitled to suppose that she would continue to navigate accordingly, and, having himself ported sufficiently to make reasonably safe clearance, should not be held in fault because the other vessel, without giving any warning, suddenly ceased to cooperate. Vessels navigating according to the rules may fairly suppose that other vessels they meet will so navigate, unless something occurs (such as a failure to answer a signal received, or a failure to conform to a signal blown) to indicate that the contrary may be anticipated. Kennedy v. The Sarmatian (C. C.) 2 Fed. 911.

The decree of the District Court is reversed, with costs of this appeal to the Whitney against the Bavier, and cause remanded, with instructions to decree in favor of libelant against the Bavier for damages, interest, and costs.

Digitized by Google

(153 Fed. 833.)

THE GEORG DUMOIS.

THE CLARA E. BERGEN.

(Circuit Court of Appeals, Fourth Circuit. May 7, 1907.)

No. 679.

1. COLLISION—CONTRIBUTING FAULTS—ABSENCE OF LOOKOUT.

The absence of a lookout on a vessel, although a fault, is immaterial in fixing liability for a collision, where it clearly was not a contributory cause because the other vessel was seen in ample time, so that with proper navigation on the part of both vessels the collision would not have occurred.

[Ed. Note.—For cases in point, see Cent. Dig. vol. 10, Collision, § 148.]

2. SAME—STEAM AND SAILING VESSEL—CHANGE OF COURSE BY SAILING VESSEL.

Where a sailing vessel by her unnecessary deviation from her course renders a collision with a steamer unavoidable, the steamer cannot be charged with liability.

[Ed. Note.—For cases in point, see Cent. Dig. vol. 10, Collision, § 51.]

3. SAME.

A collision at sea in the night between a schooner and a meeting steamer *held* due solely to the fault of the schooner in changing her course after the vessels had seen each other, and the steamer had so changed her course that there was no danger of collision if the schooner held her course.

[Ed. Note.—For cases in point, see Cent. Dig. vol. 10, Collision, § 51.]

Cross-Appeals from the District Court of the United States for the District of Maryland.

Randolph Barton, proctor for the Georg Dumois.

Robert H. Smith (Harrington Putnam, on brief), for the Clara E. Bergen.

Before GOFF and PRITCHARD, Circuit Judges, and BRAWLEY, District Judge.

GOFF, Circuit Judge. The three-masted schooner Clara E. Bergen, from Staten Island, bound for Charleston, S. C., 145 feet long with 33 feet beam, carrying 103 tons of nitrate of soda, when approaching Hatteras, soon after 1 o'clock a. m. of the night of June 24, 1905, was in collision with the steamer Georg Dumois, 180 feet long by 28 feet beam, with a cargo of fruit from Banes, Cuba, bound for the port of Baltimore. The weather had been thick and misty, when shortly before the collision the sky became overcast, and rain began falling. The fixed lights of Diamond Shoal Lightship first distinctly visible became obscured, but the flash lights were reflected from the sky. After the rain came a squall from the westward. Because of the storm the schooner's light sails were taken in. There is some dispute as to the locality of the collision; the schooner's testimony placing it to the southwestward after she had passed the lightship, while the steamer insists it was to the northward after she had passed the lightship. The schooner coming down the coast sailing on the starboard tack was making about seven knots an hour. The speed of the steamer was between ten and eleven knots an hour, and at the time of the collision she had no lookout forward; her mate and

Digitized by Google

wheelsman being on her bridge, which was about 64 feet abaft her stem. The schooner, struck on her starboard side, was abandoned; the vessel and her cargo becoming a total loss. The libel of the schooner, filed June 30, 1905, included the loss of her cargo, while the cross-libel, filed February 9, 1906, was for damages to the steamer. The causes were consolidated, the testimony being by deposition, except that the captain of the schooner was examined in open court. The decree below adjudged both vessels at fault, and directed that the damages should be divided. Cross-appeals were sued out.

The testimony for the schooner shows that about a quarter after 1 o'clock a. m. her lookout reported a steamer on the starboard bow, and that the captain and mate duly observed it. The lookout states that the steamer was about three-quarters of a mile from the schooner when the steamer's masthead light was first observed; that after reporting it he went over on the port side, and, seeing nothing there returned to the starboard, when he saw the light closer to the schooner and in the same direction; that the light was so far ahead he did not then think there would be a collision. The mate of the schooner heard the report of the lookout, and thought the steamer was from 600 to 700 feet distant when her mast light was first noticed. He notified the captain that the steamer was right off the weather bow of the schooner. The captain of the schooner heard the reports of the lookout and the mate, answering, "I see her." He recognized it as a steamer's light; says he did not see the steamer until she was two lengths away, but saw the mast light when she was farther distant. He differs with his lookout as to the distance the vessels were from each other when the mast light of the steamer was first reported to him.

The testimony offered by the steamer is to the effect that at 1:15 a. m., when she was under full steam, the schooner was seen on the starboard side of the Georg Dumois, showing the red light, and distant "something around two miles, perhaps closer." The captain and the mate of the steamer observed the schooner about the same time. The wheel of the steamer was ordered to port by the captain, the effect being that the steamer swung to the eastward, bringing her red light to the red light of the schooner and placing the two vessels on parallel lines; that soon after the helm of the steamer had been ported the schooner changed her course, thereby presenting her green light to the steamer; that then the steamer's wheel was put hard aport, and one whistle blown, the schooner still showing her green light, the captain of the steamer rang the engine full speed astern, and between 15 and 20 seconds afterward the collision occurred. At the time of the collision the schooner was sailing about southeast.

The court below in directing the decree appealed from said:

"There are two decisive facts which stand out very strongly. First. That the steamer, when she started to avoid the schooner by porting her helm when the schooner's red light was observed 3½ points on the steamer's starboard bow, either did not put her helm to port sufficiently, or that she did not begin to port at sufficient distance off. This may have been, as seems quite probable from the testimony, because the light she was manœuvring to avoid was not the light on the schooner, but on some vessel more distant and more to the westward, and this may have resulted from having no special lookout on the

Digitized by Google

steamer, or else the master of the steamer, not having carefully watched the schooner, ran too close to the schooner, closer than was justified by good seamanship in the nighttime and with every opportunity in the open ocean to give her plenty of room. On a steamer going at full speed in a place where vessels were likely to be met on a dark night with squalls of rain obscuring lights, the absence of a lookout properly placed and charged with that sole duty, is sufficient to require the court to resolve doubtful questions of fault against the steamer in a case where the absence of a lookout may reasonably have contributed to the collision. Second. With regard to the schooner, it is clear, I think, that the schooner did not obey the rule requiring her to keep her course. The schooner's master states in his testimony that, when he made out the steamer through the mist and rain, she was very close to the schooner and right on the schooner's starboard bow, and, as he took her to be a steamer whose proper course would probably be north, he, in order to give her more room, put his helm to starboard. There was a strong breeze from the north and west, and, no doubt, the schooner went off rapidly to the eastward, so much so, it would appear, that at the time of the collision she was heading about southeast. This counteracted the porting of the steamer and a collision became inevitable. It is quite clear to my mind that this is a case of mutual fault and the damages should be divided."

The schooner assigned error in the finding that she was guilty of contributory fault in putting her wheel up and changing her course. The steamer assigned it as error that she was adjudged to have insufficiently ported, or not to have ported at the proper time, and that the absence of a lookout might have caused the collision.

The absence of the lookout at the time of and for about an hour immediately preceding the collision is admitted by the steamer. This admission establishes prima facie that the collision was the fault of the steamer. Does the testimony show that, had a lookout been on duty at the time, that the collision would have been prevented? If so, the steamer was at fault; if not, the absence of the lookout was immaterial. In other words, it is well understood that faults which do not cause a collision, or that have not borne directly upon it, are unimportant. The Pilot Boy, 53 C. C. A. 329, 115 Fed. 873; The Farragut, 10 Wall. (U. S.) 334, 19 L. Ed. 946; The Annie Lindsley, 104 U. S. 185, 26 L. Ed. 716; The Blue Jacket, 144 U. S., 371, 12 Sup. Ct. 711, 36 L. Ed. 469.

If the schooner was seen at a distance sufficiently great to have enabled the steamer to pass her in safety, then the collision must have been caused by some fault other than the absence of a lookout. The captain of the steamer says that he saw the light of the schooner at the distance of "something around two miles, perhaps closer," and that he then ordered the wheel to port; the first mate of the steamer saw the lights of the schooner "about a couple of miles" distant. The man at the wheel saw the lights of the schooner "about 20 minutes" before the collision. One of the crew of the schooner says that after the light of the steamer was reported he saw it for about 12 minutes. The lookout on the schooner says that he saw the white light on the steamer "about three quarters of a mile" away. The captain of the schooner testifies differently from all the other witnesses, contradicts the evidence of the steamer, and differs with his own crew, places the distance the vessels were from each other when the light of the steamer was first seen as not over a quarter of a mile, brings them together in collision starboard side to starboard, when it is quite

Digitized by Google

evident that they came together the port bow of the steamer striking the starboard side of the schooner. If the evidence of the schooner's captain is correct, that he did not see the steamer's light until it was about one point on his starboard bow, then it was about the time the steamer went hard aport that the lookout of the schooner reported the steamer's light; and that to us in the light of the testimony is inconceivable. We are impelled to the conclusion that the schooner's captain in his effort to establish a satisfactory reason for the change in the course of his vessel—which change he had ordered—saw the lights and estimated the distance quite differently from all others who were on the vessels and subsequently examined as witnesses. If he is correct, the steamer was nearly west of the schooner and about a quarter of a mile distant when he first noticed its mast light. Even then, conceding that to be true, had each vessel maintained its course, there would have been no danger of collision, for the steamer would have gone on northward, and the schooner would have passed to the south on its course W. by S. W. Again, had the vessels occupied that relative position, why should the steamer have ported, and why the schooner have changed its course; for, having due regard for speed, distance, and course, where would the vessels have been after the expiration of the 20 minutes that the man at the wheel of the steamer speaks of, or of the 12 minutes that the member of the crew of the schooner says the light of the steamer was seen, after it was reported and before the collision occurred?

Without further discussion of the testimony, we content ourselves with saying that it clearly shows the officers of the steamer were fully advised of the location of the schooner, and that it was at such a distance as to obviate all danger of collision, had the rules applicable to the situation been observed. Hence the collision must therefore be accounted for in some other way. The presence of the schooner was known, its light was in full view, and action on the steamer's part to keep out of her way was duly taken. We are of the opinion that, although the steamer had no such lookout as was required by law, that fact did not contribute to the collision.

Finding the testimony of the captain of the schooner to be unreliable, and taking the lesser distance given by any of the other witnesses—that of the lookout of the schooner—the vessels were three-quarters of a mile apart when the schooner saw the light of the steamer. He also testifies that the steamer was so far away when he first saw its light that the idea of a collision did not occur to him. It was the duty of the steamer to keep out of the way of the schooner. The steamer ported, presuming that the schooner would keep her course, and the vessels would have safely passed if the schooner had not changed her course. It may be conceded that the red light of the schooner was seen by the steamer before the mast light of the latter was observed by the former, and that the order to port had been given on the steamer before her mast light was seen on the schooner; but still that, under the circumstances, would not have justified the latter in changing her course as she did, thereby rendering ineffective the effort of the steamer to safely pass to the eastward of the schooner. We have presented this point in the light of the testimony of the look-

Digitized by Google

out of the schooner, which is consistent with the suggestion that he first saw the steamer's mast light after she was aport. Why he did not see it sooner it is difficult to understand, for he testifies that such lights could readily be seen at that time at the distance of one mile. The duties of these vessels were mutual, and the strict observance of the rule was required no more by one than the other. The rule is imperative, and the vessel departing from it is liable for the damages resulting from such departure. As we see this case, the steamer was absolved unless she might have prevented the collision notwithstanding the schooner's error, and this the testimony does not show. Where a sailing vessel by her unnecessary deviation from her course renders a collision with a steamer unavoidable, the steamer should not be charged with damages. The Illinois, 103 U. S. 298, 26 L. Ed. 562.

The Bergen should have kept her course and speed. As a matter of fact she was not in danger of being run down. Her officer erred in concluding that the steamer would not keep out of the way, and that such emergency existed as justified him in taking the action he did. The precaution taken by the steamer would have been effective had not the schooner changed her course. The steamer was not at fault. The schooner was. The decree appealed from should be accordingly so modified.

Remanded, with directions to enter a decree in accordance with the views herein expressed.

Decree modified.

(153 Fed. 837.)

THE CALDY.

THE NEW ORLEANS.

(Circuit Court of Appeals, Fourth Circuit. May 7, 1907.)

No. 677.

1. COLLISION—VESSEL ANCHORING IN CHANNEL—OBSTRUCTING PASSAGE OF OTHER VESSELS.

While Act March 3, 1899, c. 425, § 15, 30 Stat. 1152 [U. S. Comp. St. 1901, p. 3543], providing that it shall not be lawful to tie up or anchor vessels or other craft in navigable channels "in such manner as to prevent or obstruct the passage of other vessels or craft," was not intended to absolutely prohibit the anchoring in navigable channels, it makes it unlawful whenever the result is to obstruct other vessels in passing to such extent as to make such passing a dangerous maneuver; and the fact that other vessels have succeeded in passing one so anchored in safety is not proof that her anchorage was not in violation of the statute, or that she was not in fault for a collision with another vessel which was attempting to pass.

2. SAME—STEAMER AND VESSEL ANCHORED IN CHANNEL.

A steamship 314 feet long, which was anchored through the night in the Brewerton channel of the Patapsco river, where it was 600 feet wide, and which was allowed to swing around so as to lie nearly across the channel, so that her stern was only about 100 feet from one side, while her anchor chain extended toward the other, *held* in fault for unnecessarily obstructing the channel and liable for a collision with another vessel, which was attempting to pass under her stern. The passing vessel also *held* in fault for not navigating with proper care and at slower speed in

Digitized by Google

passing, in view of the well-known tendency of vessels to sheer when near the edge of the channel.

[Ed. Note.—For cases in point, see Cent. Dig. vol. 10, Collision, § 102.]

Brawley, District Judge, dissenting.

Cross-Appeals from the District Court of the United States for the District of Maryland.

For opinion below, see 123 Fed. 802.

T. Wallis Blakistone and J. Parker Kirlin, for appellant.

Daniel H. Hayne, for appellee.

Before GOFF, Circuit Judge, and BRAWLEY and McDOWELL, District Judges.

GOFF, Circuit Judge. These cross-appeals are from a decree of the District Court for the District of Maryland, rendered on the 7th of April, 1906, in the consolidated cases of the Merchants' & Miners' Transportation Company, claimant of the steamship New Orleans, against Samuel Symonds, master and claimant of the steamship Caldy, and Samuel Symonds, master of the steamship Caldy, against the steamship New Orleans. The decree found both vessels at fault for a collision that occurred while the Caldy was at anchor in the Brewerton channel, off Sparrows Point, near Baltimore, about 8:30 p. m., on December 30, 1902.

The libel in the former case was filed January 3, 1903, in which the Caldy is charged with fault in these particulars: That she negligently and unlawfully located herself at anchorage, that she had a negligent and insufficient anchor watch, and that she failed to exercise a reasonable precaution in putting out stern anchors that she might lay up and down the channel. The answer of the Caldy denied the allegations of the libel, and averred that when she arrived off the mouth of Sparrows Point channel, near where the collision occurred, all the berths at said point were occupied; that the channel leading into Sparrows Point from the Brewerton channel was too narrow for the purpose of an anchorage, and that, there being no other anchorage ground in that vicinity, she anchored in the Brewerton channel, about opposite the mouth of the Sparrows Point channel, in such position that she was not an obstruction; that she complied with all legal requirements regarding her anchor lights and an anchor watch—and charged that the collision was caused by the fault of the New Orleans. The master of the Caldy on January 13, 1903, filed his libel against the New Orleans, in which the allegations as made in his answer to the libel of the New Orleans are in substance set forth; and to this libel the claimant of the New Orleans, in making answer, substantially repeated the allegations contained in its libel. A large number of witnesses were examined in behalf of each steamship, and a number of interesting and important questions are raised by the voluminous record presented for our consideration. The opinion of the court below is found in 123 Fed. 802, to which reference is made for a more particular description of the circumstances relating to said collision.

We fully agree with the court below in finding that the Caldy was in fault in anchoring as she did in the Brewerton channel. We are

Digitized by Google

of opinion that her anchor was considerably northward of the middle of the channel, and that, whatever her position may have been when her pilot left her, at the time of the collision she had shifted with the wind, until she was lying nearly across the channel, her stern not quite 100 feet from the southern bank thereof, heading but little east of north; the wind direction being from that quarter. Her pilot was mistaken when he located the Caldy's anchor south of mid-channel, else how could she, with at least 90 feet of anchor chain, herself 314 feet long, swing with the wind across the channel, which was 600 feet wide, and still leave her stern about 100 feet from the southern bank, as the evidence shows it was at the time of the collision. If the anchor was at the place the pilot of the Caldy thinks it was, then when the wind changed, and the vessel, shifting with it, swung southward with stem to north, where would her stern have been? The court below found—the conclusion was irresistible—that at the time of the collision the Caldy was lying nearly directly across the channel, and it is evident that her distance from the southern bank was not far from 100 feet; hence it follows that her stem must have been about 114 feet northward of mid-channel. It was a physical impossibility for the Caldy, at the time she cast her anchor, to have occupied the position relative to the middle of the channel that her crew testified she did.

Being in the position we find from the evidence she occupied, it follows that the Caldy did obstruct the passage of other vessels; for as she was anchored some distance north of mid-channel, the wind from the north holding her across the channel, she naturally caused other vessels entitled to the southern side to fear to attempt to pass to the north because of the unknown length of her anchor chain, and she rendered the southern side at least hazardous, as was demonstrated by the three vessels that did succeed with difficulty in passing, and by the one that made the effort and failed. The fact that other vessels had frequently anchored in the Brewerton channel, near where the Caldy had cast her anchor, and that no damage resulted therefrom, does not prove that the Caldy was not in fault, but tends to show that such other vessels were navigated with the prudence and judgment that unfortunately we are unable to find in the seamanship of the Caldy. It is likely true that the Caldy at the time she anchored was headed west by north, and that before her pilot left her she swung with the tide and wind, with her 15 fathoms of chain, until her heading was east by north; but still we are forced by the overwhelming weight of the evidence to the conclusion that at the time of the collision she had been carried by the wind, the tide not interfering, until she was heading but little, if any, east of north. This would place her almost directly across the channel, and allowing say 100 feet for the passageway south of her—the approximate distance given by those who passed her—would place her considerably north of mid-channel, with her anchor chain extending still farther to the northward.

Counsel for the Caldy insist that because other vessels, both before and after the collision, succeeded in passing her safely, it follows she was properly anchored, and that she did not obstruct navigation. We do not agree to this, for it does not follow that vessels of different size, some requiring more speed than others, some less or more depth

Digitized by Google

of water, moving with varying winds and tides, some being navigated with more skill than others, could all successfully, or with the same degree of risk, pass her as she was then anchored. Even in this particular instance, some of those passing, as a matter of precaution, went out of the channel in doing so, their draft permitting, and the others were materially interfered with by the sheer caused by their necessary proximity to the southern bank of the channel. This argument may show that the position of the Caldy did not prevent the passage of other vessels; but it does not show that it did not "obstruct the passage of vessels and craft."

The Caldy did not exercise proper care in anchoring, for she obstructed the channel to a far greater extent than the necessities of the situation required, than the statute permitted, than ordinary caution should have suggested. When she concluded to make her temporary anchorage answer for the night, she might have held her place by dropping her stern anchors, with which she was supplied, or she might have arranged for moving her anchor if the change of the wind and the consequent swinging of the vessel rendered it expedient for her to do so. No such precautions were taken, the risks of the night were either not appreciated or recklessly assumed, and with an indifference which it is desirable may never be duplicated, a careless watch was left on deck, all others going below. The pilot had left them. The crew were strangers to the locality, absolutely ignorant concerning the channel, without even a chart to guide them. They knew of their danger, for the pilot had admonished them, and the first officer was to have been called if the vessel swung; but he was not.

We do not think the Congress intended by Act March 3, 1899, c. 425, § 15, 30 Stat. 1152 [U. S. Comp. St. 1901, p. 3543], to absolutely forbid anchoring in navigable waters, except only at such places as the location of the vessel would necessarily prevent the passage of other vessels, or obstruct them in passing to such an extent as to make the effort to do so a dangerous maneuver. If a vessel anchors at a point in a channel where, notwithstanding such anchorage, other vessels, navigated with the care the situation requires, can safely pass, then she has neither violated the statute, nor rendered herself liable under the general rules applicable to navigation, even though to a certain extent she has obstructed the channel.

The navigator of the New Orleans, coming down the middle of the channel, observed the Caldy when a mile distant and saw that she was at anchor, located as he thought across the channel, one-half her length on each side. He had therefore—provided his location of the steamer was correct—the distance of 143 feet on the northern side, from which the anchor chain was to be deducted, in which he could pass, and 143 feet for the same purpose between her stern and the southern bank. He was entitled to the southern side—to pass to the starboard—and, besides, as he was unaware of the length of the Caldy's anchor chain, which he thought was well across the channel, he concluded, as did the other steamers passing the Caldy that evening, that it would be safer to pass under her stern on the southern side. With this conclusion under then existing conditions we find no fault. But we think that the evidence conclusively shows he was mistaken when he located

Digitized by Google

the Caldy where he did, for at that time her stern was considerably nearer the southern edge of the channel than he had calculated it to be, as we have found from the testimony and as became apparent to him when his vessel sheered and refused to respond to his port wheel.

The master of the New Orleans did not give the order to port as soon as he should have done, nor did he seem fully to appreciate the danger he was incurring in his movement to pass the Caldy. The Atlanta ported when one-half mile from the vessel at anchor, the Georgia and the Howard in time to counteract, before they reached the Caldy, the sheer with which they both contended. The Georgia moved closer to the southern bank, and the Howard left the channel. The New Orleans was within 1,300 feet of the Caldy when she first ported. She then, having steadied her helm, proceeded with the Caldy's stern light half a point on her port bow, until she was about 500 feet distant, when she again ported; but her master, seeing that his vessel was swinging to port and not answering her helm, gave the order to hard aport, hoping thereby to overcome the sheer. But he failed so to do, and the orders to "slow down" and "to stop," which followed, did not prevent the collision. Her speed increased the danger from the sheer, which was well known to her master, who, familiar, as he was, with that channel, and of the tendency of vessels to sheer when near its banks, should have guarded against it by slowing down and approaching more cautiously, thereby retaining better control of his own vessel. The other passing vessels evidently went by under greater speed than was prudent, taking the risk and fortunately escaping accident.

The fact that the New Orleans has also been found in fault does not, under the circumstances disclosed by this record, palliate the offense of the Caldy; but it does provide for her a companion in misfortune and liability. The Caldy, having violated the provisions of the statute applicable to her anchorage, was required, in order to excuse her for that fault, to show, not only that her fault did not contribute to the disaster following, but also that it could not have done so. This she has signally failed to do. The decree appealed from is without error.

Affirmed.

BRAWLEY, District Judge, dissents.

(153 Fed. 841.)

In re E. M. NEWTON & CO.*

SWOFFORD BROS. DRY GOODS CO. v. BRYANT.

(Circuit Court of Appeals, Eighth Circuit. April 27, 1907.)

No. 2,454.

1. BANKRUPTCY—SURRENDER OF PROPERTY—STIPULATION—PERFORMANCE.

Where intervener surrendered possession of property received from the bankrupts which was to be the subject of litigation, on the faith of a stipulation between the intervener and the bankrupt's receiver, approved by the referee, that intervener should lose no rights thereby, the bankrupt's trustee should not be permitted to repudiate the stipulation, though the receiver and referee may have acted improvidently in entering into it.

*Rehearing denied June 17, 1907.

Digitized by Google

2. CHATTEL MORTGAGES—DISTINGUISHED FROM CONDITIONAL SALE.

Intervener contracted in writing to deliver certain goods to the bankrupts prior to their bankruptcy, to be sold by them in the usual course of their business, but that the title and right of possession of all such goods and all the proceeds of sales thereof, whether in cash or in book accounts, should be vested and remain in intervener until the purchase price of the goods had been fully paid to it; that, except for the right to resell the goods in the ordinary course of business, the bankrupts should not remove any from the city in which they were doing business; and that they should keep the goods insured for intervener's benefit. *Held*, that the bankrupts, not only held such goods for intervener, but were bound to account for and pay over the proceeds of goods sold as collected, and that the contract was therefore a conditional sale, and not a chattel mortgage.

[Ed. Note.—For cases in point, see Cent. Dig. vol. 9, Chattel Mortgages, § 23.]

3. BANKRUPTCY—CLAIMS TO PROPERTY—WHAT LAW GOVERNS.

Where intervener in bankruptcy proceedings claimed certain property delivered to it just prior to the institution of the proceedings, whether the contract under which intervener claimed was a conditional sale or a chattel mortgage, whether it was valid as between the parties, and the effect of intervener's failure to record it were questions which were determinable exclusively by the local law.

[Ed. Note.—For cases in point, see Cent. Dig. vol. 6, Bankruptcy, §§ 273, 275, 276, 277.]

4. SALES—CONDITIONAL SALES—RECORD.

Under the law of Arkansas a conditional contract of sale is valid though it provides that the vendee may sell the property in the usual course of business, and it is not recorded.

[Ed. Note,—For cases in point, see Cent. Dig. vol. 43, Sales, §§ 1352, 1353, 1384, 1397, 1370.]

5. BANKRUPTCY—TITLE OF TRUSTEE.

The bankrupts' trustees acquire no greater right to property which has been in the bankrupts' possession than the bankrupts themselves had.

[Ed. Note.—For cases in point, see Cent. Dig. vol. 6, Bankruptcy, §§ 193, 353, 1384, 1397, 1370.]

Appeal from the District Court of the United States for the Western District of Arkansas.

Swofford Bros. Dry Goods Company, a corporation, appeal from an order denying its right to certain moneys and property in the hands of the trustee of E. M. Newton & Co., bankrupts.

Ernest S. Ellis (Webber & Webber, on the brief), for appellant.

R. L. Searcy and William H. Arnold, for appellee.

Before SANBORN, HOOK, and ADAMS, Circuit Judges.

HOOK, Circuit Judge. The appellant intervened in the bankruptcy proceedings, claiming to be the owner of certain goods, notes, and accounts under the terms of a written contract made with the bankrupts about a year before the proceedings were instituted. The contract provided, in substance, that appellant should sell goods to the bankrupts to be resold by them in the usual course of their business in Arkansas, but that the title to and right of possession of all goods delivered under the contract and of all proceeds of resales, thereof, whether in cash, note, or book account, should be vested and remain in appellant until the purchase price had been fully paid to it; that,

Digitized by Google

except for the right to resell the goods in the ordinary course of their business, the bankrupts should not remove them from the city in which they were doing business; also that they should keep the goods insured for the benefit of appellant. The contract was not recorded. Thereafter, and at a time when the bankrupts were insolvent and appellant knew it, they turned over to appellant the remainder of the goods then on hand and certain notes and accounts, which were claimed to be proceeds of other goods obtained under the contract and resold by them to their customers. The notes were indorsed and the accounts assigned in writing to appellant. Three days afterwards voluntary proceedings in bankruptcy were commenced and an adjudication was made. A receiver was appointed, who demanded possession of the property from appellant. The demand was refused. Subsequently, however, the goods, notes, and accounts were delivered to the receiver under a written stipulation made with the approval of the referee in bankruptcy that the appellant should not be prejudiced thereby; that, while the property might be converted into cash, the proceeds should be held to abide the final determination of the controversy as to the ownership. The receiver succeeded himself as trustee. The goods were sold, and part of the notes and accounts were collected by him. By its intervention the appellant sought the proceeds of the sale and the collections and such of the notes and accounts as remained on hand. On final hearing the district court held that the contract under which appellant sold the goods to the bankrupts was in effect a chattel mortgage, and not a contract of conditional sale; that it contemplated that the bankrupts as mortgagors should retain possession of the goods with authority to resell them in the usual course of their business, and without obligation to pay over the proceeds to the appellant; and that it was therefore fraudulent and void under the doctrine of Twyne's Case, 1 Smith, Lead. Cas. (7th Am. Ed.) 52, obtaining in Arkansas.

The case must be considered upon the assumption that the goods which were returned to the appellant three days before the commencement of the bankruptcy proceedings were part of the identical goods originally sold by it to the bankrupts under the contract, and also that the notes and accounts were proceeds of like goods. When the bankruptcy proceedings were commenced, the appellant was in the possession of the goods, notes, and accounts and claimed them adversely to the receiver. It refused to surrender them until a stipulation recognizing the verity of the facts as claimed by it to exist was made with the approval of the referee. Upon the faith of that stipulation the court of bankruptcy acquired possession. By voluntarily yielding possession of property which was to be the subject of litigation the appellant parted with an advantage well recognized in the law; and the agreement that its rights should not be prejudiced thereby, and that the facts existed upon which its claim of title was predicated, should not be permitted to be repudiated, especially since it received the solemn sanction of the court of bankruptcy, and since the trustee whose present possession depends upon the act of the receiver holds fast to the advantage secured. There was no fraud practiced by the appellant in securing the stipulation, and the fact that the receiver and referee may possibly have acted improvidently affords no suf-

Digitized by Google

ficient cause for ignoring its terms. Therefore, the only questions that are open are those which arise from the face of the original contract, the failure to record it, and the fact that the appellant secured possession of the property on the eve of the proceedings in bankruptcy with knowledge of the insolvent condition of the bankrupts.

We are not able to assent to the contention that the contract authorized the bankrupts to resell the goods in the usual course of their business without obligation to pay the proceeds to appellant. The appellant expressly reserved the title to the proceeds, in whatever form they might be, and the right to take possession of the notes and accounts arising from resales and collect them for itself. They were property of appellant in the hands of the bankrupts. An obligation of the bankrupts to account for and pay over what they collected of the proceeds is implied, and a default in performing it would be a breach of contract as much as if a mortgagor of chattels without power of sale should nevertheless dispose of the mortgaged property and appropriate the proceeds to his own use. Whether the contract under which appellant claims is one of conditional sale or is a chattel mortgage, and, as between the parties thereto, whether it is valid, and what the effect of the failure to record it may be, are questions to be determined exclusively by the local law. Thompson v. Fairbanks, 196 U. S. 516, 25 Sup. Ct. 306, 49 L. Ed. 577; Humphrey v. Tatman, 198 U. S. 91, 25 Sup. Ct. 567, 49 L. Ed. 956; York Mfg. Co. v. Cassell, 201 U. S. 344, 26 Sup. Ct. 481, 50 L. Ed. 782. Whatever may be the law in some jurisdictions it is authoritatively settled in Arkansas that a contract of conditional sale is valid notwithstanding it contains a provision that the vendee may sell the property in the usual course of his business.

Triplett v. Implement Co., 68 Ark. 230, 57 S. W. 261, involved a contract of that character, and the conditional vendor was allowed to recover the goods from the vendee's assignee in insolvency who had taken possession of them. The court cited with approval Perkins v. Mettler, 126 Cal. 100, 58 Pac. 384, Dewes Brewing Co. v. Merritt, 82 Mich. 198, 46 N. W. 379, 9 L. R. A. 270, and Baring v. Galpin, 57 Conn. 352, 18 Atl. 266, 5 L. R. A. 300. In one of these cases the contract of conditional sale of a stock of merchandise expressly provided that the vendee might resell in the usual course of business, and in the other two cases resales by the conditional vendees were held to have been in contemplation. In all of them the contracts were sustained as contracts of conditional sale. The contract involved in the Arkansas case provided that the title of the vendor should extend, not only to the property, but also to the proceeds of sales thereof made by the vendee. It is true that, in this connection, the court observed that, if the goods were sold by the vendee, they were to be sold as the property of the vendor, but we are unable to perceive how this difference is of importance in considering the peculiar circumstances of this case. If a conditional vendee sells the goods and mingles the proceeds with proceeds of his own goods so that they become indistinguishable, the vendor may lose title, but the case before us presents no such difficulty. It was expressly agreed in the stipulation that the notes and accounts involved here were the proceeds of goods

Digitized by Google

delivered to the bankrupts under the contract of conditional sale, and that agreement obviates all difficulties in tracing title. Observing the terms of the stipulation, there was no admixture of the proceeds of sales by the bankrupts with the proceeds of other goods. It was as though no other goods had been sold or as though the sales had been made in the name of the appellant and the notes and accounts taken accordingly. Therefore, under the stipulation and the rule of Triplett v. Implement Co., it must be held that, as between the appellant and the bankrupts, the former was the owner of the goods, notes, and accounts in controversy. And further that, under the doctrine obtaining in Arkansas, it would have remained such owner even had an assignee in insolvency of the vendee first secured possession of them. There is no law in Arkansas requiring a contract of conditional sale to be filed or recorded in any public office.

Notwithstanding the views which this and other courts have at times entertained as to the effect of an adjudication in bankruptcy, and the right and title of the trustee resulting therefrom, it has been definitely settled by the Supreme Court that the trustee is vested with no better right or title than belonged to the bankrupt; that he stands simply in the shoes of the bankrupt, and as between them he has no greater right. York Mfg. Co. v. Cassell, supra. The right of appellant in this case did not first come into existence when it took possession of the property in controversy on the eve of the bankruptcy proceedings. On the contrary, it was secured by the contract which was executed almost a year before, and it is that date which we must regard rather than the date when possession was taken.

The order of the District Court must therefore be reversed, and the cause remanded for further proceedings in conformity with this opinion.

(153 Fed. 845.)

DELAWARE & H. R. CO. v. WILKINS.

(Circuit Court of Appeals, Second Circuit. April 30, 1907.)

No. 16.

1. RAILROADS—PERSONS ON TRACK—LICENSEES—CARE REQUIRED.

As against a bare licensee a railroad company may run its trains in the usual way, without special precautions, if the circumstances do not of themselves give warning of his probable presence, and he is not seen until it is too late to prevent injury.

[Ed. Note.—For cases in point, see Cent. Dig. vol. 41, Railroads, § 1236.]

2. NEGLIGENCE—CONTRIBUTORY NEGLIGENCE—QUESTION FOR JURY—FEDERAL COURTS.

A federal court is not bound under all circumstances to submit the question of contributory negligence to the jury.

[Ed. Note.—For cases in point, see Cent. Dig. vol. 37, Negligence, § 299.]

3. RAILROADS—PERSONS ON TRACK—LICENSEES—DEATH—CONTRIBUTORY NEGLIGENCE.

Intestate was killed while walking as a licensee along defendant's railroad track. He was aware of the approach of the train, and stepped outside the rails to stand until it should pass him, not appreciating the fact that a curve at the point where he was standing would cause the "bucking-beam" of the engine pilot to project further than usual. He

Digitized by Google

stood so close to the track that he was hit by the beam, though a single step back would have placed him in a position of safety. *Held*, that intestate was negligent as matter of law.

[Ed. Note.—For cases in point, see Cent. Dig. vol. 41, Railroads, §§ 1286, 1287.]

In Error to the Circuit Court of the United States for the District of New York.

This cause comes here upon writ of error to review a judgment of the Circuit Court, entered upon a verdict in favor of defendant in error, who was plaintiff below. The action was brought to recover damages for the death of plaintiff's intestate, who was killed by being struck by an engine operated by defendant on its railroad.

F. W. Maloney, F. M. Butler, and W. B. C. Stickney, for plaintiff in error.

O. M. Barber and M. C. Webber, for defendant in error.

Before WALLACE, LACOMBE, and TOWNSEND, Circuit Judges.

LACOMBE, Circuit Judge. Between the railroad station at Rutland and that at Center Rutland, nearly two miles westerly, the tracks of the Rutland Railroad Company and of the Delaware & Hudson Company run substantially parallel, on the same roadbed and close to each other, the track of the Rutland lying northerly of that of the Delaware & Hudson. About a quarter mile easterly from the Center Rutland station a highway crossed both tracks at right angles. This was known as the "Ripley crossing." Genovesi, plaintiff's intestate, lived in a house just south of Ripley crossing, and was employed in a shop of the Vermont Marble Company, located a short distance west of Center Rutland station. Such residence and employment had continued for about six months previous to the accident. From a marble mill located south of the railroads and east of Ripley road a spur—called also the "C. & P." track—runs diagonally across the highway northwesterly till it makes a switch connection with the Delaware & Hudson track. It crosses the highway about 60 feet south of the Ripley crossing, and the switch is located 280 feet west of the same crossing. Eastward of Ripley crossing, and between it and another crossing (known as "Chaffee crossing"), there was a signal post south of the track, intended to warn the engineer of a westbound train of the condition of the switch, with which latter it was connected by signal wires which ran to the switch target and for a considerable distance beyond it. From the Ripley crossing to near the switch the roadbed was about on the same level with the ground on both sides, except that there were ditches on each side of the roadbed. Somewhere near the switch an embankment commenced; that is, the roadbed is raised quite a little above the land adjoining on the south side. On the north side the land is as high as the roadbed or a little higher. From the switch target to the place where the northerly of the C. & P. rails first reaches the southerly Delaware & Hudson rail the distance was 71 feet, and it was nearly twice as far to the place where that C. & P. rail crossed the line of signal wires. The C. & P.

Digitized by Google

roadbed, the main roadbed, and the triangle of land bounded by those two roadbeds and the Ripley crossing were about on a level. After the accident Genovesi's body was found south of the Delaware & Hudson road, at the foot of the embankment, 35 feet from the Delaware & Hudson track and 17 feet west of the line of the switch target. From a point 825 feet east of the switch target to the target both roads (Delaware & Hudson and Rutland) run on a medium curve (a two-degree curve) towards the right or northerly. The distance between the south rail of the Delaware & Hudson and the signal wires varied from six to nine feet, and the projection of the ties beyond the south rail varied from a foot and six inches to two feet.

On the morning of November 22d at 6:07 a west-bound passenger train of the Delaware & Hudson left the station at Rutland. It was a regular train due to leave at 6:05 a. m. Before getting out of the yard at Rutland, it was delayed a few minutes by a long freight train of the Rutland Road, which was crossing from the freight yard on the left to the main Rutland track on the right of the Delaware & Hudson track. While waiting for the freight train to pass in front of him, the engineer of the Delaware & Hudson train extinguished the headlight on his engine. The freight train was also bound west, and, as it traveled more slowly than the Delaware & Hudson train, the latter had almost overtaken the engine of the freight train at Ripley crossing. Concededly Genovesi was struck somewhere near the switch target, and knocked off the embankment. When found, there were scratches on his face, bruises on his body, and he was lying face downward, with his neck dislocated. He was dead. The express stopped a little beyond the switch target, and the fireman came back with a lantern to find the man who had been hit.

It appeared that the track and roadbed between Chaffee crossing and Center Rutland station had been used to a considerable extent continuously for several years by the public as a short cut to mills or marble yards. That fact was known to defendant, which had endeavored by putting up signs and by scattering coarse stones along the roadbed to put a stop to it; but without success. Although the public were never invited to go upon the roadbed (except to cross it at the regular crossings)—either directly or indirectly as a convenient means of access to or from stations or waiting trains—the evidence warrants the conclusion that the persons who thus used the track for their own convenience were licensees. An examination of the Vermont cases cited on the briefs does not indicate that a railroad is held to any greater obligation of care towards licensees in that state than in other jurisdictions; the general rule being that:

> "As against a bare licensee a railroad company has a right to run its train in the usual way, without special precautions, if the circumstances do not of themselves give warning of his probable presence, and he is not seen until it is too late."

Chenery v. Fitch. R. R., 160 Mass. 211, 35 N. E. 554, 22 L. R. A. 575; Keller v. Erie R. R., 183 N. Y. 67, 75 N. E. 965; Penn. R. R. v. Martin (C. C. A., Third Circuit) 111 Fed. 586, 49 C. C. A. 474, 55 L. R. A. 361; Butler v. N. Y. C. & H. R. R. (C. C. A., Second Circuit,

Digitized by Google

March 26, 1907) 152 Fed. 976, 82 C. C. A. 330; Nor. Pac. R. R. v. Jones (C. C. A., Ninth Circuit) 144 Fed. 47, 75 C. C. A. 205.

It will not be necessary, however, to discuss the law or the facts bearing upon that branch of the case. We are of the opinion that it was error to deny the motion made at the close of the case to direct a verdict in defendant's favor on the ground that, while using the defendant's track and right of way for his own convenience, plaintiff's intestate "did not exercise the care and prudence which the law requires, and was guilty of contributory negligence."

It is contended by plaintiff that in the federal courts the question of contributory negligence is always one for the jury to pass upon. This is not so. Elliott v. C., M. & St. P. R. R., 150 U. S. 245, 14 Sup. Ct. 85, 37 L. Ed. 1068; N. P. R. R. v. Jones, 144 Fed. 47, 75 C. C. A. 205. The case at bar differs from some which are found in the Reports, where there was no eyewitness of the accident or of the movements of the deceased immediately anterior thereto, and in which the jury have been allowed to infer the facts from the appearance of the body and the conditions of the locality and of the car or engine, coupled with a presumption arising upon the "natural instinct of self-preservation." In St. Louis & S. F. R. R. v. Chapman (C. C. A., Eighth Circuit) 140 Fed. 129, 71 C. C. A. 523, it was held that the doctrine that a person is presumed to have exercised due care to protect himself from injury, if applicable at all in the case of a person who goes upon a railroad crossing at night where there is known danger from moving engines on the tracks, is only so in the absence of any testimony explanatory of his conduct at the time and of the manner of his injury. The narrative of the transactions in the case at bar is as follows:

Moriglione, a witness called for the plaintiff, who lived with Genovesi in the same house near the Ripley crossing, testified: That they were accustomed in the morning to go to work together, timing themselves by the Delaware & Hudson express, generally starting after it went by, but sometimes starting ahead of it when it was late, as it sometimes was, and that they both knew that at about 6:10 the train used to go by, and that they used to wait for it; that on the morning in question, a very dark morning, they left the house at 6:10; it being time to start for work, witness not knowing of the Delaware & Hudson express having passed. They came out of the house together, and walked down the spur (C. & P.) track towards the Delaware & Hudson track; Genovesi being in advance. As the witness drew near the Delaware & Hudson, he saw the two trains approaching, and stopped at the end of the spur track to let them go by; the freight train being in the advance. As soon as they passed, he went along the spur into and along the main track of the Delaware & Hudson, and saw a train stop and a man with a lantern come out, whereupon he stopped and looked, and saw Genovesi lying dead. The last he saw of Genovesi the latter was going towards his work, but witness seems not to have noticed him after he himself stopped to wait for the train. There is nothing remarkable in this last statement. There was no reason why the witness should have called out or urged Genovesi to stop and wait with him on the spur, because on the roadbed of the Delaware & Hudson, as has been seen, there was at least until one got some distance

Digitized by Google

beyond the switch a safe place to walk alongside of and close to the signal wires, which were from six to nine feet from the rails. No doubt Moriglione supposed that Genovesi had seen the approaching trains which he himself had noticed, and would keep away from the vicinity of the rails.

Plaintiff's witness Mecier was walking west from Chaffee crossing between the tracks of the Rutland and the Delaware & Hudson. He heard the whistle and bell of the freight train, and looked back, but, being then near the Ripley crossing, kept on until he reached it, when he got off the roadbed altogether, stepping into the triangle between the spur and the Delaware & Hudson and beyond the line of signal wire. He was about six or eight feet west of the crossing when the freight began to go by him, and, while he was standing there, the Delaware & Hudson express also passed him. He noticed the approach of the latter train a few seconds after he got off from the track. He says that, when the Delaware & Hudson passed, he stood somewhat west of the crossing, about halfway between the crossing and where the spur rail runs in; but he nowhere qualifies the statement that he was near to the crossing when he got off the tracks after seeing the freight train. Just before this witness reached the Ripley crossing he saw two men (undoubtedly Genovesi and Moriglione) start from the houses towards the C. & P. track, and proceed along the spur. Just as witness was going across the Ripley crossing, he saw one of these men go by the spur over onto the Delaware & Hudson track. He did not notice him thereafter, and the last he saw of him he was walking between the rails of the Delaware & Hudson track. Evidently he thought the position an unsafe one, because he testified it was his intention when the train went by to look ahead to see what happened. Just after the train went by him he looked and saw the man go up in the air about four feet, and then down the bank. The train was between them, and he could not see how he was struck; and did not take any notice of him after he saw him go on the track where he went until he saw him in the air.

The engineer of the express testified that, when he was a little to the east of the Ripley crossing, he saw a man come out from in front of the Rutland freight engine which was ahead of him, that the man looked up towards him and crossed over towards the witness' left, apparently crossing the Delaware & Hudson to the south to get out of the way of the train. He was a considerable distance ahead, amply sufficient to clear the tracks. The engineer was sitting on the right-hand side of the cab, so the man soon passed out of his range of vision, and he supposed he had reached a place of safety until he heard the fireman, who was lookout on the left-hand side, call out, "We struck a man," whereupon he came to a stop as soon as he could, using "emergency" brake. The engineer estimated that the man he saw coming out from in front of the Rutland freight was somewhere near the switch target. If this estimate is correct, the man the engineer saw crossing to southward was undoubtedly Genovesi, who had (since Mecier saw him) got over as far as the Rutland track. Plaintiff's counsel contends that the engineer is mistaken in his estimate, and that the man he saw was really Mecier. We are not inclined to this

Digitized by Google

conclusion, because Mecier got off the tracks close to the crossing, although he subsequently moved further west into the triangle; and it seems singular that the engineer should be so far out of his way in estimating distance. The switch-target is 280 feet from the crossing. But really it makes little difference if it was Mecier whom he saw. The only result would be a finding that Genovesi had not at any time that morning got north of the track between the rails of the Delaware & Hudson where Mecier saw him walking.

The fireman testified that he was sitting on the left-hand side of the cab; that it was not daylight and it was not dark, and that he could see the track 200 or 300 feet ahead (the train was running on a curve to the right), and could see a man at that distance if one were there; that, while thus looking out and when they had got on the west side of the Ripley crossing, he saw a man step outside of the rail not a great way ahead, looking at the train; that he stepped over in front of the left side as they went west, and stood right outside the end of the ties with his face towards the train, and that witness supposed he was out far enough to clear the track. He did not undertake to estimate the man's distance ahead when he thus saw him, but estimates that there could not over four or five seconds have elapsed when he was struck by the bucking-beam of the engine and knocked down the embankment. This is the heavy timber covered with iron plate, which is located cross-wise across the front of the engine above the cowcatcher, and projects on each side about as far as the ends of the ties. When rounding a curve, the sharper the curve the more the bucking-beam projects out. It might be from four to six inches more than usual. The fireman called out, as stated before, the train was stopped, and he went back with a lantern, and, with others, found the body.

Plaintiff's counsel contends that the fireman's testimony is not entitled to consideration. He was cross-examined at great length as to what details of dress and personal appearance he noticed in the man he saw. Like many other inexperienced witnesses, he thereupon became voluble as to a number of wholly irrelevant details, irrelevant because no one disputes the proposition that the man whom the engine struck was Genovesi. We find nothing to impeach the witness, and no contradiction of his story on any material points. Moreover, it fits in with the other testimony and is corroborated by the testimony of the doctor called by plaintiff as to the condition of Genovesi's body. Evidently his neck was broken by the fall. There were contusions on the right shoulder and right hip, more swollen on the hip than on the shoulder. The bucking-beam would be about at the height of his hip. Whether there is some projection higher up on the engine does not appear. There can be no escape from the conclusion that these contusions mark the place where the blow was delivered which hurled him off the bank. If he had been overtaken while walking, unconscious of danger, between the rails, as Mecier saw him, these marks would have been on his back. If he were crossing the track trying to get out of the way to the southward onto the safe part of the roadbed near the signal wires, the marks would have been on the left side. Being on the right side, they furnish the strongest cor-

Digitized by Google

roboration of the story of the fireman as to where Genovesi was standing when he was struck. But, even if the evidence of the fireman were thrown out of the case, and the evidence of the engineer confined, as plaintiff contends it should be, to Mecier's movements, then we have Genovesi, familiar with the locality and aware that a train was due, failing to keep himself on the part of the roadbed where he could stand or walk with safety, but going, instead, unnecessarily so close to the track as to expose himself to being hit by passing trains when a single step would have put him out of danger.

There can be no doubt, however, that, aware of the approach of the train, he stepped outside the rails to stand till it might pass him, and, not appreciating the fact that a curve would cause the bucking-beam to project further than usual, stood so close to the track that he was hit, instead of stepping back, as he might have done, to the signal wires, or even over them and a bit down the slope.

Within the principles laid down in St. Louis & S. F. R. R. v. Chapman and Elliott v. C., M. & St. P. R. R., supra, the jury should have been instructed to find for the defendant.

Judgment reversed, and cause remanded for a new trial.

(153 Fed. 851.)

THE UMBRIA.

THE CHARLES E. MATTHEWS.

(Circuit Court of Appeals, Second Circuit. April 30, 1907.)

No. 246.

COLLISION—STEAMSHIPS—NEGLIGENCE—STARBOARD HAND RULE—VIOLATION.

A steamship observed a tug and tow nearly a mile distant in the channel of the upper New York Harbor. The tug at this time appeared at a point on the steamer's port bow with her tow in a westerly direction across the fairway of the channel, and bound across the steamer's course. The tug and tow in fact were not moving, but the tug was attempting to take one of its scows alongside and shorten the hawser on the other. When the steamer approached she blew two whistles, which were not answered, and then blew two more, with a similar result, about 10 seconds intervening. Between the whistles the wheel was put hard astarboard, so that the steamer's course was changed 20 degrees, in an attempt to pass astern of the tow. Being unable to accomplish this, an attempt to stop was made which was ineffectual, and a collision resulted. *Held*, that the steamer was the privileged vessel required by article 21 to keep her course and speed until she had received a signal from the tug, and was therefore at fault in violating the starboard hand rule; and the tug was also at fault in attempting to perform her maneuver, which occupied from 500 to 750 feet of the channel, at a point where it was less than half a mile in width, and at a time when seagoing vessels were known to be due, without having some one in the pilot house of the tug on the lookout to answer and give signals.

[Ed. Note.—For cases in point, see Cent. Dig. vol. 10, Collision, § 79.]

Appeal from the District Court of the United States for the Southern District of New York.

On appeal by all parties from a decree of the District Court for the Southern District of New York awarding damages in the sum of $17,363.23 to the libelant for injury to his scow sustained by collision with the Umbria op-

Digitized by Google

posite Bay Ridge, in the Upper Bay of New York, while the scow was in tow of the tug Matthews. The District Court held both the tug and steamship at fault and adjudged that one-half of the above amount be recoverable against each vessel. Both appeal.

The libelant also appeals, insisting that the commissioner and court erroneously disallowed $3,000 paid by it for repairs of the scow. The witnesses as to the collision, with one unimportant exception, were examined before the district judge. The opinion of the district judge, confirming the report of the commissioner upon the question of damages, is reported sub nom. The Umbria (D. C.) 148 Fed. 283.

J. Parker Kirlin, for the Umbria.
Chas. C. Burlingham, for the Matthews.
E. C. Benedict, for libelant.

Before LACOMBE, TOWNSEND, and COXE, Circuit Judges.

COXE, Circuit Judge. The Umbria was condemned in the District Court for starboarding when she should have held her course under the starboard hand rule. She was also held to be in fault for not stopping and reversing sooner. The tug was held to be negligent because, for her own convenience, she stopped in a navigable channel and permitted her tow to drag out astern, thus closing to navigation a considerable portion of the fairway. We think the District Court correctly disposed of the case and will indicate our reasons for holding both vessels in fault.

First, as to the Umbria. The collision occurred December 24, 1905, at about 8:21 in the morning. There was a little haze on the water but nothing to prevent objects being seen a long distance away. In fact the master of the Umbria testified that "you could see a safe distance, for a December morning." He saw the Matthews when she was a mile distant. There can be no doubt that at this time the starboard hand rule applied. The answer of the Umbria admits this as follows:

"After leaving Robbins' Reef Light abeam the Umbria sighted a mile or more distant, a tug [the Matthews] one point on her port bow. * * * Apparently, said tug, with her tow, was under way in a westerly direction across the fairway of the channel and bound across the course of the Umbria."

To the same effect is the testimony of Capt. Stephens:

"I should say from where I stood that he [the tug] was nearly right ahead, perhaps a few degrees on the port bow, the scow was a point and a half on the port bow I should say."

The pilot testified:

"When I first saw her [the tug] I thought the tow was going across the channel; of course she had me on her starboard-hand, the tow boat was right ahead of me and the scow on our port bow one point."

In The Gladys, 144 Fed. 653, 75 C. C. A. 455, we held that "the tug and barges for the purposes of navigation with reference to others are to be regarded as a single vessel."

Indeed, the counsel for the Umbria concedes that "the court was right in holding that the case fell under starboard-hand rule." The Umbria was the privileged vessel, required by article 21 to keep her course and speed, at least until she had received the assent of the

Digitized by Google

tug to navigate contrary to the rule. To demonstrate that her conduct was in complete disregard of the rule it will only be necessary to refer to her navigation from the moment she saw the Matthews until she collided with the tow, as described by the pilot who had her in charge. His testimony bearing upon this question is in substance, as follows:

"The report was 'tug right ahead,' scow on her port bow, about a point astern of the tow. I blew two whistles, I got no answer; I blew two more and no answer. I put my wheel hard astarboard before I blew the second whistle. The order to the wheel was starboard and hard astarboard. I gave the order to starboard between the whistles. There was about ten seconds between those two signals. I got no answer whatever to these signals. I blew no danger signal. I blew two whistles that is the only signal I blew. I did not wait to get a reply, I starboarded my helm right away. The first order was hard astarboard. When I found the tug lying still it didn't pass through my mind that I could go on either side. There was only one way for me to go, astern. My helm was starboarded and I kept it there; it was my duty to pass to the eastward; there was plenty of water."

The pilot's idea of correct navigation in such circumstances is stated by him as follows:

"Q. If you had supposed that the Matthews and her scow were not moving at all when you first looked at her through the glasses would you starboard your helm and try to go astern? A. I would. It is always a proper thing to go astern of every vessel when you have room and get a chance.

"Q. No matter whether you have right of way or not? A. Go astern. Blow your whistle—the first man that blows the whistle has got right of way in any harbor.

"Q. You think it is different from sea? A. Yes. At sea they blow one long blast, in the harbor they blow one and two.

"Q. Whoever blows first must stick to it? A. Yes, sir; and the man that blows a cross whistle he does wrong.

"Q. That is your view from your experience as a Sandy Hook pilot? A. Yes, sir."

Not only did the pilot fail to observe the rule but he completely reversed it. He acted apparently upon the supposition that his was the burdened vessel, and the Matthews the privileged vessel. Instead of holding his course he gave two blasts and immediately, without waiting for a reply changed his helm to hard astarboard so that the Umbria changed her heading 20 degrees. The violation of the rule was deliberate and occurred when the vessels were a mile apart and before the Matthews had indicated her intention in any way.

We are not called upon to decide what the Umbria should have done or speculate as to the result if she had obeyed the rule. It is enough that she disobeyed it at a time when for aught that appeared the Matthews was intending to follow it.

The district judge also condemned the course of the Umbria for not stopping and reversing sooner. It is true that up to the time when Capt. Stephens interfered and gave the order to "stop her" the Umbria had been going under a full speed order. It is also true that the captain testified that had the scow been three lengths instead of one length away when the order "full speed astern" was given there would have been no collision. We are inclined to think, however, that the failure to stop sooner was not a fault but an error of judgment in extremis.

Digitized by Google

Was the Matthews in fault? The District Judge found that the "collision was as near as may be about the middle of the channel." The testimony on this point is very conflicting; it is impossible to locate the place with perfect accuracy and we are unable to say that this finding is against the weight of evidence. The collision certainly occurred in the channel and that, too, at one of its narrowest points, about a third of a mile below the bell buoy at Bay Ridge where it is, probably, a little under half a mile in width. A strong flood tide was running, and it was Saturday morning when every pilot in the port knows that a large number of ocean steamers are arriving and departing.

The Matthews stopped with two scows in tow, on hawsers aggregating 220 fathoms, somewhere about a mile above Fort Wadsworth, to take the first scow alongside and shorten the hawser of the second before entering the Kills. During this maneuver, which took over twenty minutes to execute, the entire flotilla was drifting with the tide so that just before, and at the time of the collision, the distance from the bow of the scow, which was lashed to the Matthews, to the stern of the scow that was sunk, was from 500 to 750 feet. These vessels were on a line almost athwart the channel. It was probably necessary to execute this maneuver, but it does not appear that it was necessary to execute it in a crowded channel and in such a manner that nearly a quarter of the channel was blocked for twenty minutes. The work of rearranging the tow was carried on without the slightest regard to other vessels navigating the channel. The master of the Matthews was in the cabin asleep. There was no lookout. Every one on the tug was below except the mate and two deck hands, who were engaged in heaving in the hawser by the steam capstan, which was located aft on the deck. The mate heard the Umbria's signals but paid no attention to them. In fact, nothing was done by the Matthews until the scow was almost in the jaws of collision when her engines were ordered "slow ahead."

The Matthews was at fault for executing a maneuver, which required so much time and occupied so much space, so near the center of the channel without taking precautions to prevent passing steamers from being misled. It is not shown that it was necessary for her to occupy the channel at all and she certainly could have made the change at the edge of the channel with almost absolute safety. Having chosen the channel itself as the theater of her operations she should have had a competent lookout constantly on duty and should have been ready at all times to answer and give signals and to act promptly in order to prevent disaster to herself, to her scows and to others. With no one awake in the pilot house this was impossible.

On the question of damages the libelant was given unusual opportunities to prove the amount of his loss. The commissioner's original finding was reopened to give the libelant another opportunity to obtain the necessary proof, but in this he failed again, in the opinion of the commissioner, and a second award to the same effect was made, which was carefully reviewed by the judge who decided that the commissioner had reached a just conclusion.

Digitized by Google

We have examined the record with care and are not satisfied that a finding of fact reached after so careful and painstaking an investigation should be disturbed.

The decree is affirmed, with interest, but without costs of this court.

(153 Fed. 855.)

THE ST. GOTHARD.

(Circuit Court of Appeals, Second Circuit. April 3, 1907.)

No. 231.

SHIPPING—STEVEDORES—INJURIES—NEGLIGENCE OF SHIP.

Plaintiff, a stevedore engaged in unloading bags of sugar from the hold of a vessel, was injured by the falling of a sling caused by the breaking of the rope fall as the sling caught under the coamings of the between-decks hatch. The fall provided for use at such hatch was made of wire, but shortly before the injury the stevedores not employed by the ship had substituted the rope fall in order to use the wire fall at another hatch. The rope was a four-inch one, and, if properly used and inspected, was fully capable of the work in hand. The ship had also provided an abundance of spare falls, both wire and rope, which were at the service of the stevedores whenever any fall indicated that a change was required, and the ship's officer, on noticing the change, asked concerning it, and the foreman replied that the wire fall was wanted elsewhere, and that the rope was quite good to lift anything they wanted to lift. *Held*, that the ship was not negligent nor responsible for the breaking of the rope.

[Ed. Note.—For cases in point, see Cent. Dig. vol. 44, Shipping, § 350.]

Appeal from the District Court of the United States for the Eastern District of New York.

This cause comes here upon appeal from a decree of the District Court (149 Fed. 790) holding the steamer liable for injuries sustained by the libelant, who was working upon her as a longshoreman.

J. Parker Kirlin and Charles R. Hickox, for appellant.

Lorenzo Ullo, Albert M. Yuzzolino Ullo, and Ruebsamen & Yuzzolino, for appellee.

Before WALLACE, LACOMBE, and TOWNSEND, Circuit Judges.

LACOMBE, Circuit Judge. The main facts of the case are set forth in the opinion of the district judge as follows:

"The vessel in its charter party agreed to furnish tackle for loading and discharging cargo. At each hatch a fall was provided to lift the cargo (bags of sugar) from the hold, and, save at the bunker hatch, there was another fall to carry out-board and deposit it on the dock. All falls of the first class were made of wire, and all of the second class were made of rope. At the spare bunker hatch but one fall was used, and that was made of wire. The ship discharged a part of her cargo at Yonkers, and then went to Arbuckle's dock in New York, where, after the work had begun, the stevedores not employed by the ship substituted the rope fall of No. 3 for the wire fall at the spare bunker hatch, for the probable reason that the wire fall was on account of greater length more available at No. 3 hatch. The libelant, a longshoreman employed by the Arbuckle company, was in the hold under the spare bunker hatch making up the slings. As a sling containing five bags was rising, it caught under the coamings of the between-decks hatch, and thereupon the rope broke and the sling fell upon libelant's knee, causing serious injury. Some portion of

Digitized by Google

the rope was produced in court on the trial April 4, 1906, and as it then appeared was unfit for the purpose of a fall. The rope had been used somewhat since the accident, which was October 9, 1905. * * * The sling came into contact with the coaming. The winch continued to work and the rope broke. * * * The hatch was 14 feet athwartship and 5 feet 6 inches fore and aft, and through this opening in rapid discharge of cargo the sling was taken. The collision with the coamings at times was expectable, and a fall was required that should withstand reasonably the shock of such contact. To meet this demand the ship had provided and rigged wire falls, and the stevedores had for their own convenience substituted the rope."

The district judge held the ship liable because it did not "use suitable care to furnish falls that would meet the duty that the stevedores would allot to them, and because "both the stevedore's foreman and the ship's officer were negligent in allowing the rope to be used."

We are unable to concur in this conclusion. Besides the facts above set forth others appear in the record, either undisputed or established by the fair weight of evidence. First as to the rope. The expert witness called by libelant testified that a new four-inch fall such as the one in question, if used for lifting cargoes from the deck of a vessel over the side where the rope does not come in contact with any sharp or hard surface, would have a life of from 30 to 36 hours; that if used for hoisting cargo from under deck, where it is being constantly exposed to chafing over the sides of the hatch, and to sudden strains as a sling catches under the hatch, it ought not to be used over 15 hours. And he added:

"It all depends on how the rope is used. I have seen some rope that wouldn't last three hours with the gang of men aboard that boat."

There is evidence that for a considerable time the stevedores used this fall to lift out five bags to a sling, instead of four, although cautioned not to do so. The extra weight is not important; but, since five bags made the draught more bulky, the chances of catching under the hatch were greater. Moreover, there is evidence to show carelessness in guiding and in directing the hoisting, so that such catching with consequent sudden strain on the rope was increased. The fall had been in such use four or five hours before the accident. To whatever extent use subsequent to the accident had deteriorated it, it is manifest that its condition on the trial was considerably different from what it was when the stevedores substituted it for the wire fall which would have stood the chafing and the strains for a vastly longer period. There is not a particle of evidence to show that if left where the ship had placed it, to serve in lifting cargo from the deck to the dock, it was not in perfectly proper condition to complete the discharge of all this cargo.

The ship had also provided an abundance of spare falls, wire and rope both, which were at the service of the stevedores whenever the appearance or the use of any fall indicated that reasonable prudence required a change. Where a ship supplies proper falls for unloading cargo, with an abundant supply to take the place of such as show signs of wearing out during the operation, all at the disposal of the stevedores, the authorities do not sustain the proposition that she is to be held in fault because the stevedores make improper use of such appliances. When she has done this, she has used suitable care to fur-

Digitized by Google

nish falls that would meet the duty that the stevedores would be expected to allot to them. The facts in the case at bar differentiate it from those cited by libelant. In The Kate Cann (D. C.) 2 Fed. 246, dunnage improperly stowed by the crew broke away. In The Edith Goddon (D. C.) 23 Fed. 43, an insufficient derrick, under the disadvantageous condition of a very rough sea, was used by the ship's officers to lower away a long boat. In The Carolina (D. C.) 30 Fed. 199, the guy rope which broke had been rigged in the place where it was put to use by the ship's officers, who were held guilty of negligence when they "permitted it to be used after its insufficiency had been decided by its breaking." In The Tresco, 134 Fed. 819, 67 C. C. A. 465, a defective splice in a wire cable, concealed by a tarred twine serving, gave away, and the cable, which was taken from another ship and had not been carefully inspected, was rigged by the ship for the service for which it was being used. In The William Branfoot (D. C.) 48 Fed. 914, the accident was the fall of an iron stanchion supporting the between-decks. In The Nebo (D. C.) 40 Fed. 31, a cross-beam supporting a platform made by the mate and carpenter to aid in discharging cargo gave way. In Coughlin v. The Rheola (C. C.) 19 Fed. 926, the chain which broke was supplied by the ship for the purpose for which it was being used. In The William F. Babcock (D. C.) 31 Fed. 418, there was an improperly protected hatch. In Cliffe v. Pac. Mail S. S. Co. (C. C.) 81 Fed. 809, a defective manhole cover on deck. In Lowndes v. The Phenix (D. C.) 34 Fed. 760, the mate upon request, furnished the rope sling for the very use to which it was put. In The Alejandro, 56 Fed. 621, 6 C. C. A. 54, the "general management of the work on hand was under direction of the officers of the vessel," who put the rotten rope to the use in which it broke. Libelant has quoted from the decision of this court in The King Gruffydd, 131 Fed. 189, 65 C. C. A. 495. In that case the stevedore's men were raising a heavy skid from a lighter. The boom was held by a wire cable known as a "topping-lift," which extended from the end of the boom to a block on the mast. The skid caught on the side of the vessel, and, the winch not stopping, the topping-lift broke close to the eye. The boom was rigged by the stevedores, not by the ship, and an ample supply of gear and tackle for such rigging was furnished by the ship. Such supply of rigging included chains as well as wire rope in proper lengths for use as "topping-lift," and the ship sought to escape liability because the stevedore's men, with rigging before them (the chains) which would have stood the strain, selected rigging (the wire) which would be likely to break if the load caught. That contention, however, was found by the court to be without merit, because the evidence showed that a wire topping-lift was as safe for the purpose as a chain. It appeared that the utmost lifting capacity of the engine was only 3 tons, while a wire cable of the size used, if in good condition, would lift easily 20 tons. The ship was held liable because the splice near the eye of the cable had become weakened by the corrosive action of rust, a condition which would have been apparent if the "service" of bagging and spun yarn had been removed when the ship's officers made their regular inspections. We did not hold that it was necessary to remove such "service" at

Digitized by Google

every inspection, but that the cable in question had been so handled, being left exposed in the rigging when at sea, instead of being housed in some warm, dry place, that the ship's officers were bound to anticipate that its life was nearing an end, and that its weakest point (the splice) "should have been subjected to some periodic examination and renewal of the oiled service which was intended to protect it." The King Gruffydd is a very different case from the one at bar, where there is no proof of unfitness for the purpose to which the fall was appropriated, and where the stevedores remove a wire fall manifestly impervious to chafing and substitute a rope one which they knew would rapidly deteriorate under the hard usage to which they thereafter expose it.

The facts in Jeffries v. De Hart (Third Circuit) 102 Fed. 765, 42 C. C. A. 615, are similar to those in the case at bar. The stevedores themselves selected from the ship's tackle what rigging they preferred, and the ship was held not to be in fault because their selection turned out to be improvident.

The conclusion of the district judge that both the stevedore's foreman and the ship's officer were negligent is based solely upon the circumstance that the mate, about 10 a. m., some time after the substitution, noticed that the change of rope for wire had been made and asked the foreman the reason for it. The reply was that they wanted the wire for aft, and that the rope was quite good to lift anything they wanted to lift. This is not sufficient to hold the ship in fault. For aught that appears, the rope was perfectly good if it were used carefully and overhauled from time to time to see if it was being chafed by use.

The decree is reversed, with costs of this appeal, and cause remanded, with instructions to dismiss the libel.

(153 Fed. 858.)

G. GULBENKIAN & CO. v. UNITED STATES.

(Circuit Court of Appeals, Second Circuit. March 26, 1907.)

No. 234 (4,125).

CUSTOMS DUTIES—APPRAISEMENT—MIXED WOOLS.

White and colored wools were sold together in the Bagdad market at one price, without any distinction as to color; this being in accord with immemorial practice in that market. *Held*, that in finding "the actual market value * * * in the principal markets of the country whence imported, and in the condition in which such merchandise is there bought and sold for exportation to the United States," under Customs Administrative Act June 10, 1890, c. 407, § 19, 26 Stat. 139 [U. S. Comp. St. 1901, p. 1925], both kinds of wool should be appraised at the same price, in accordance with the manner of purchase, without regard to any difference in value which may attach to each kind in any other country.

Appeal from the Circuit Court of the United States for the Southern District of New York.

The decision below affirmed a decision of the Board of United States General Appraisers (G. A. 6,151 [T. D. 26,719]), which had affirmed the assessment of duty by the collector of customs at the port of New York. The importation in controversy consisted of 1,000 bales of wool, of which 800 were

Digitized by Google

invoiced as white, and 200 as colored. This wool was the subject of reappraisement proceedings under Customs Administrative Act June 10, 1890, c. 407, § 13, 26 Stat. 136 [U. S. Comp. St. 1901, p. 1932], before a single General Appraiser, and then, on appeal, before a board of three General Appraisers, as a result of which an advance in value as to the white bales, which was made by the local appraiser, stood affirmed. Proceedings were then brought by the importers under section 14 of said act (26 Stat. 137 [U. S. Comp. St. 1901, p. 1933]), for the purpose of testing the legality of the appraisement and the reappraisements; and at the hearing before the Board of General Appraisers in these latter proceedings the importers introduced evidence intended to show that the appraisement by the local appraiser was illegal. The Board, however, held that, whatever irregularity may have characterized that appraisement, it would have been cured by a valid reappraisement, and that there was no evidence that the reappraisements before a single General Appraiser had not been properly made. The assessment of duty was therefore affirmed. In the Circuit Court, on appeal, considerable additional evidence was introduced by the importers.

The pertinent part of section 19 of said act (26 Stat. 139 [U. S. Comp. St. 1901, p. 1925]), the construction of which is involved herein reads as follows: "Sec. 19. That whenever imported merchandise is subject to an ad valorem rate of duty, or to a duty based upon or regulated in any manner by the value thereof, the duty shall be assessed upon the actual market value or wholesale price of such merchandise as bought and sold in usual wholesale quantities, at the time of exportation to the United States, in the principal markets of the country from whence imported, and in the condition in which such merchandise is there bought and sold for exportation to the United States, or consigned to the United States for sale, including the value of all cartons, cases, crates, boxes, sacks, and coverings of any kind, and all other costs, charges, and expenses incident to placing the merchandise in condition, packed ready for shipment to the United States."

The opinion filed by the court below reads as follows:

WHEELER, District Judge. These are white and colored wools, mostly white, coming from Bagdad. They are by practice sold there at the same price, although the white is worth considerably the most for bringing here, and they have been appraised here according to that difference. The principal question seems to be whether the appraisers here must follow that practice in ascertaining the actual market value or wholesale price of the wool, or may the actual value of each there separately for exportation to this country be ascertained. That arbitrary practice does not aid in ascertaining, but rather conceals, the actual market value of the white wool, and it should not be followed when it would have that effect.

Some questions have been made about the regularity of the first appraisals, but these were appealed from, and the proceedings on the appeals seem to be the only ones in question, and they do not appear to be radically wrong when the basis is found to be right.

The paragraphs of Tariff Act July 24, 1897, c. 11, § 1, 30 Stat. 182, 183 [U. S. Comp. St. 1901, pp. 1664, 1665, 1666], in question are as follows:

"Par. 351. Class three, that is to say, Donskoi, native South American, Cordova, Valparaiso, native Smyrna, Russian camel's hair, and all such wools of like character as have been heretofore usually imported into the United States from Turkey, Greece, Syria, and elsewhere, excepting improved wools hereinafter provided for."

"Par. 358. On wools of the third class and on camel's hair of the third class, the value whereof shall be twelve cents or less per pound, the duty shall be four cents per pound.

"Par. 359. On wools of the third class, and on camel's hair of the third class, the value whereof shall exceed twelve cents per pound, the duty shall be seven cents per pound."

Hatch & Clute (J. Stuart Tompkins, of counsel), for importers.

J. Osgood Nichols, Asst. U. S. Atty.

Before LACOMBE, TOWNSEND, and COXE, Circuit Judges.

Digitized by Google

COXE, Circuit Judge. The question in controversy is, whether the wool brought here from Bagdad, Turkey, shall pay four cents per pound under paragraph 358 or seven cents per pound under paragraph 359. If the value of the wool was twelve cents or less per pound the appellants should succeed; if more than twelve cents per pound the appellee should succeed.

There is no disputed question of fact. The wool in question, without any distinction as to color, was purchased by the importers at Bagdad for 7.36 piasters per oke and, after adding all packing charges required by section 19 of the administrative act, the value of the wool at Bagdad was less than twelve cents per pound.

The appellants have been importing wool from Bagdad for twenty-five years. They purchased white and colored wool in the market for the same price and always invoiced their purchases at the cost price precisely as in the present instance. The white and colored wool are invariably sold together and for the same price.

One of the importers testifies:

"The owner of a lot will say 'here is my lot, this is my price.' We take it, we pack it as far as possible, so called white and so called colored separately. We sell the wool in this country. It contains maybe 30 per cent. of gray, from 10 or 5 per cent. We can never separate them; we take one fleece, for instance, you will see on one side it looks all white, and turn it and find it is black or some other color; it is the character of the wool that they never come absolutely white; there is always mixed colors, part of the sheep fleece may be white, might have a black mark on it, or near the skirt may be yellow or brown. * * * We buy them at one price. If I were to invoice it at any different prices I would not know what price to invoice one from the others. * * * There is no distinction. We have to pay the same price whether it is white or colored."

The testimony establishes overwhelmingly, and without contradiction, that in the Bagdad market from time immemorial, the white and colored wools have been sold together and always at the same price. Even when a partial separation was made the price was the same for the white as for the colored wool. There is no such thing as a strictly white wool coming from the Bagdad markets. Wools called white by manufacturers and dealers are not white. There is no difference in quality between the so-called white and the so-called colored wools.

The local appraiser, without altering the total invoice value, reduced the value of the colored wool to about nine cents per pound and added the amount so deducted to the white wool, making the value above twelve cents per pound, and thus subject to the high duty of paragraph 359.

The action of the local appraiser was sustained on reappraisement. The Board of General Appraisers overruled the protests and its decision was affirmed by the Circuit Court.

We are of the opinion that the protests should have been sustained.

When the merchandise arrived at the port of New York the duty of the collector was plain. Having ascertained that it was wool imported from Bagdad he had only to ascertain its market value, not at New York or London or Marseilles, but at Bagdad, add thereto the packing charges, and his duty was done.

Digitized by Google

If the value of imported wool is to be ascertained by proof addressed to each separate importation a cumbersome, unworkable system will result which will open the door to uncertainty and fraud.

In order that the collector may have an infallible standard by which to measure value Congress enacted (section 19 of the customs administrative act) that duty shall be assessed upon the actual market value of the merchandise as bought and sold in usual wholesale quantities in the principal markets of the country from whence imported.

The rule thus fixed by statute is plain and simple; binding alike on importer and collector. Neither may vary or evade it. Neither may appeal to other criteria of value.

If the rule had been followed in the present case the value of appellants' wool would inevitably have been fixed at less than twelve cents per pound. By discarding the rule, and substituting argument and conjecture, a conclusion is reached which fixes the value of four-fifths of the importation at thirteen cents per pound and one-fifth at nine cents per pound. And yet if the record contains a syllable of proof that any of this wool, or similar wool, was ever bought and sold in Bagdad for thirteen cents or nine cents per pound, or that such difference in value as this can exist in the same lot of wool, we have failed to discover it.

The argument of the appellee rests, we think, upon the initial fallacy that the white wool was worth more in the markets of Bagdad than the colored wool.

The proof shows that it was not worth more and a finding to the contrary must either be wholly arbitrary or based upon facts which the statute excludes from consideration, viz., value in this country. The value of the wool here or in foreign countries, other than Turkey, the use to which the wool was to be put, the object of the purchaser in separating it, are all, in our judgment, matters extraneous to the issue.

By the express command of the statute the collector was prohibited from considering anything but the actual market value of the wool in the principal markets of Turkey. Having ascertained that value he should have levied duty accordingly.

The proof establishes beyond contradiction or doubt that the value of the wool at Bagdad was less than twelve cents per pound and it should have been so fixed.

The decision is reversed.

(153 Fed. 861.)

EDWARD BENNECHE & BRO. v. UNITED STATES.

(Circuit Court of Appeals, Second Circuit. March 26, 1907.)

No. 236 (4,049).

CUSTOMS DUTIES—CLASSIFICATION—HAND-MADE PAPERS—INDIA TRANSFER PAPER.

The hand-made papers coverer by Tariff Act July 24, 1897, c. 11, § 1, Schedule M, par. 401. 30 Stat. 189 [U. S. Comp. St. 1901, p. 1672], enumerating "writing, letter, hand-made, drawing, * * * and typewriter paper," are not only those used as writing papers, but also that suitable for other uses, as hand-made India transfer paper used for making lithographic transfers and in printing.

Digitized by Google

Appeal from the Circuit Court of the United States for the Southern District of New York.

See G. A. 6,058 (T. D. 26,440).

Following is the opinion of the court below:

WHEELER, District Judge. This is found to be specifically hand-made paper, which is specifically provided for under paragraph 401 of the act of 1897, and is not such as was under consideration in Miller v. U. S. (C. C.) 128 Fed. 469, although the remark there made would cover it, as held by the Board. That remark as made by me does not appear to have been sound, and was not essential to the decision, and was not approved by the mere affirmance of the decision. The question seems to be still open, and the specific designation must govern. The decision of the Board brought about apparently by that remark, therefore is erroneous.

Decision reversed.

Walden & Webster (Albert H. Washburn, of counsel), for importers.

D. Frank Lloyd, Asst. U. S. Atty.

Before LACOMBE, TOWNSEND, and COXE, Circuit Judges.

COXE, Circuit Judge. The merchandise in question is hand-made India transfer paper imported from China. It is used for making lithographic transfers and is sold to dealers in lithographic supplies. It is also used for printed proofs and plates. It was assessed by the collector as hand-made paper under paragraph 401 of the act of 1897 (Act July 24, 1897, c. 11, § 1, Schedule M, 30 Stat. 189 [U. S. Comp. St. 1901, p. 1672], the relevant portions of which are as follows:

"Writing, letter, note, hand-made, drawing, ledger, bond, record, tablet, and typewriter paper, weighing not less than ten pounds; * * * but if any such paper is ruled, bordered, embossed, printed, or decorated in any manner, it shall pay ten per centum ad valorem in addition to the foregoing rates."

The importers insist that the merchandise should have been assessed as paper not specially provided for under paragraph 402, which, so far as it relates to this controversy, is as follows:

"Paper hangings and paper for screens or fireboards, and all other paper not specially provided for in this act, twenty-five per centum ad valorem." 30 Stat. 189.

The Board of General Appraisers felt constrained to overrule the classification of the collector upon the authority of Miller v. U. S., 128 Fed. 469, in which it is said, in substance, that paragraph 401 relates exclusively to writing papers.

Judge Wheeler who decided the Miller Case also decided the case at bar. He points out that his previous interpretation of paragraph 401 was incorrect and obiter dictum and finds the merchandise specifically provided for therein as hand-made paper. We believe the later decision to be correct.

Paragraph 401 cannot, as the appellants contend, be limited to the class of hard stock, hard sized writing and drawing papers. If it had been the intention of Congress so to limit the paragraph that intention could have been succinctly expressed by the use of the words, "writing and drawing paper weighing not less," etc. The inclusion of hand-made paper and typewriter paper indicates a purpose not

Digitized by Google

to confine the paragraph within the narrow limits suggested, for neither is particularly suitable for drawing or writing.

Furthermore, the appellants' contention overlooks the significance of the clause "but if any such paper is * * * printed or decorated in any manner." Congress evidently had in mind paper not only suitable for writing and drawing but for printing as well. In other words, the language specifically covers a hand-made printing paper. That the paper in question is hand-made is undisputed. The statement that it is wholly unfit for printing is not sustained by the testimony, at least as broadly as counsel assert.

One of the witnesses says:

"It is transfer paper, used from one stone to another. It would be bothersome, of course, to print that so many times and the lithographer takes a piece of that paper and puts it on the stone, from there it is printed out. That is what the paper is used for. * * *

"Q. Do you know whether you can print on it?

"A. Oh, yes.

"Q. Do you know whether it can be printed on?

"A. They print transfers on it."

That it can be printed on with type can be demonstrated by a very simple experiment with a rubber stamp.

We find that the paper in question is specially provided for as hand-made under paragraph 401 of the tariff act.

The decision is affirmed.

(153 Fed. 863.)

THE ROBERT R. KIRKLAND.

(Circuit Court of Appeals, Third Circuit. May 7, 1907.)

No. 20.

1. SHIPPING—OWNERSHIP OF VESSEL—EVIDENCE CONSIDERED.

Evidence considered, and *held* not to sustain the claim of a respondent to the ownership of a vessel in controversy.

2. SAME—LIEN—AUTHORITY TO CONTRACT FOR REPAIRS.

One of the respondents and another person were appointed joint agents to represent a number of parties who had joined in the purchase of the plant and vessels of a dredging company to be paid for in installments, with power to make the payments and receive and manage the property. The other respondent was a firm of which the first respondent was a member, and which was also one of the purchasers of the dredging property. *Held*, that the individual respondent had no power as agent to contract for the making of repairs by his firm on one of the vessels purchased and delivered to the agents, without the concurrence of his co-agent, and that the firm could not hold the vessel under a claimed lien for repairs so ordered by him.

[Ed. Note.—For cases in point, see Cent. Dig. vol. 44, Shipping, § 323.]

3. SAME—SUIT TO RECOVER VESSEL—TITLE TO SUPPORT.

The purchasers of such dredging fleet having ratified the action of the directors of a dredge owners association of which they were all members, appointing a committee to supercede the agents previously acting, with power to complete payment and take title to the property purchased and to manage and dispose of the same, such committee, after receiving a bill of sale of the purchased vessels, in their own names, were authorized to maintain a suit as owners to recover possession of one of the vessels against one of the constituent owners which wrongfully withheld it.

Digitized by Google

4. ADMIRALTY—COST OF KEEPING LIBELED VESSEL—ALLOWANCE TO MARSHAL.
A marshal who has taken possession of a vessel on a process from a court of admiralty is responsible for her safe keeping to all parties in interest, and, if he dispenses with a caretaker at the request of one party, it is within his discretion to again take possession and incur the expense of a keeper as authorized by Rev. St. § 829 [U. S. Comp. St. 1901, p. 636].

Appeal from the District Court of the United States for the District of New Jersey.

For opinion below, see 143 Fed. 610.

R. D. Benedict, for appellants.

Albert A. Wray and Linsly Rowe, for appellees.

Before DALLAS, GRAY, and BUFFINGTON, Circuit Judges.

GRAY, Circuit Judge. This is an appeal from the United States District Court for the district of New Jersey, in admirality, in a libel for possession, by the appellees, against the steamtug Robert R. Kirkland, Ralph G. Packard and Josiah S. Packard, appellants.

On the pleadings and proofs of the respective parties, the court below adjudged that the libelants were the true legal owners of the said steamtug, and that possession of the same be delivered to them by the marshal, and that the libelants recover against Ralph G. Packard and Josiah S. Packard their taxed costs, amounting to $524.00.

The opinion, pursuant to which this decree was entered, is reported in 143 Fed. 610.

After a careful examination of this record we are convinced that the learned judge of the court below was correct in his findings of fact and conclusions of law. The contention of appellants on the question of title to the tug, seems to rest largely on an erroneous conception of the authority of the Board of Directors of the Atlantic & Gulf Coast Dredge Owners Association, with respect to the business and affairs of the parties of the second part to the agreement of October 12th, 1892. Its relation to these parties was purely advisory, and though intimate, by reason of the fact that the parties of the second part constituted a part of its membership, its board of directors did not represent, and did not claim to represent, said parties to the agreement referred to, otherwise than by their friendly offices. Even if the weight of the testimony established the fact of the agreement to sell, alleged by R. G. Packard to have been made by said board of directors, of the steamtug to himself, for $1600.00 (which we do not think it does), such an agreement would have been, as found by the learned judge of the court below, a nullity. There was no evidence of any authority in said board to make such a sale, and they had expressly disclaimed any such authority in the vote adopted by them on December 4th, 1895, in which R. G. Packard participated, by providing:

"That this vote should be submitted to the members of said party of the second part to the contract aforesaid, for their ratification, adoption and confirmation."

In regard to the possessory lien claimed by the firm of R. G. Packard and J. S. Packard, it may be added to what has been said

Digitized by Google

by the learned judge of the court below, that the bills for repair made by the firm, of which R. G. Packard was a member, are open to the criticism to which all transactions are amenable, where a trustee deals with himself in matters affecting the trust property. We agree, however, to the correctness of the ground upon which the court below rested its decision.

Counsel for the appellants say in their brief, that:

"The district court committed two grave errors, in its consideration of the claim of R. G. and J. S. Packard to be reimbursed for their expenditures on the vessel, before possession should be taken from them."

They say:

"The first error consisted in misunderstanding the nature of the claim of the Packard firm."

In proof of this, they cite the following language of the court:

"He (Packard) could not, without the consent of his co-trustee, authorize his firm to repair the tug in any such manner as to give to that firm a *maritime lien* upon her."

The italics are those of counsel, who proceed to say that the firm "never claimed to have a maritime lien on the tug. They claimed below, and claim here, a simple common law or possessory lien." We think it is quite clear, that the learned judge of the court below used the words "maritime lien" in a general or non-technical sense, as being a lien, the subject matter of which was a vessel, and not as distinguished from a common law or possessory lien. What was said by the learned judge, was entirely applicable to the common law lien claimed by appellants.

We have examined carefully the exceptions filed by claimants and respondents in the court below, to the marshal's fees for compensation to a keeper, from March 17th, 1899 to May 29th, 1899, at $2.50 per day, and also for extra compensation for expenses of pumping, 74 days at 50 cents per day, amounting in all to $222.00. The ground of appellant's contention is, that, inasmuch as, shortly after the marshal had taken possession of the tug, by virtue of the process issued at the instance of the libelants, the watchman placed thereon by the marshal was withdrawn at the request of the proctors for the libelants. Some days after this withdrawal, the tug was again seized by the marshal, on a libel filed by R. G. Packard, one of the respondents in this case. A keeper was then put in charge of the tug, and after the dismissal of the said libel by the court, was kept in charge under the authority claimed by the marshal under the original process, by virtue of which he first seized the tug at the suit of the libelants in the present case. It appears from the exhibits that some protest was made, against thus incurring the expense of the keeper, by the proctors for the libelants, and an offer was made to give the marshal an indemnity bond, on condition that he would dispense with such custody. This bond, however, was never given, and the marshal insisted that his responsibility under the process in his hands was such as required him to see to the safety of the vessel that he had seized. The responsibility thus incurred was not only to the libelants, but to

Digitized by Google

all who were interested as claimants, or otherwise, in the property seized. In dispensing for a few days with a keeper, at the request of the proctors for the libelants, in the first instance, the marshal acted on his own responsibility, but it was entirely within his discretion, for his own protection, and in the performance of his duty, to again take possession and incur the expense of a keeper, authorized by section 829 of the Revised Statutes [U. S. Comp. St. 1901, p. 636]. We think the marshal, in doing so, acted within his rights, and that the charges allowed by the court for a keeper, were within the legal limit prescribed, and the charge for extra labor for pumping to keep the vessel afloat was reasonable, and was properly incurred.

The order of the court below in that respect is, therefore, approved, and its decree is hereby affirmed.

(153 Fed. 866.)

THE ANNA M. FAHY.

THE OVERBROOK.

THE MEDIA.

(Circuit Court of Appeals, Second Circuit. April 30, 1907.)
No. 266.

1. NAVIGABLE WATERS—OBSTRUCTION BY WRECK—LIABILITY OF OWNER FOR FAILURE TO MARK WRECK.

   Act March 3, 1899, c. 425, § 15, 30 Stat. 1152 [U. S. Comp. St. 1901, p. 3543], which provides that, whenever a vessel is wrecked and sunk in a navigable channel, "it shall be the duty of the owner of such sunken craft to immediately mark it with a buoy or beacon during the day and a lighted lantern at night," places such duty upon the owner, and no one else, and he cannot shift the responsibility for an injury to another vessel resulting from his failure to perform it upon tugs which caused the wreck by their fault, when he had notice of the situation in ample time to have performed the duty before damage resulted.

2. SAME.

   The owner of a canal boat which was sunk in New York Bay, who received notice of the sinking at once, and could have had it marked as required by statute within an hour, is liable for the damages caused by a passing vessel coming into collision with the wreck six hours later, when it was still unmarked.

Appeal from the District Court of the United States for the Southern District of New York.

On appeal from a decree of the District Court for the Southern District of New York awarding damages to the libelants, owners of the tug Bulley, for injuries sustained by her as the result of running upon the sunken canal-boat Anna M. Fahy. The Fahy was sunk by reason of the negligence of the tugs Overbrook and Media in towing her upon the rocks near St. George, Staten Island. The claimant of the Fahy brought in the tugs under the fifty-ninth rule in admiralty. The District Court dismissed his petition with costs and the claimant has appealed to this court, insisting that the Fahy should be absolved and the tugs Overbrook and Media held for the libelants' damages.

John F. Foley, William J. Martin, for libelant.

James K. Symmers, James Emerson Carpenter, and Carpenter, Park & Symmers, for the Fahy.

Digitized by Google

William S. Montgomery, Henry Galbraith Ward, and Robinson, Biddle & Ward, for The Overbrook and Media.

Before LACOMBE, TOWNSEND, and COXE, Circuit Judges.

COXE, Circuit Judge. The tug Bulley was damaged by running upon the sunken wreck of the canal boat Fahy shortly after 6 o'clock on the evening of April 4, 1905. The Fahy sank about 8:30 on the morning of the same day having been negligently towed on the rocks by the tugs having her in charge. The Bulley was without fault and is entitled to a decree against the vessel or vessels responsible for her damages. This proposition is not controverted.

The libel was filed upon the theory that the Fahy was solely liable for the reason that her owner neglected to comply with the provisions of section 15 of the act of March 3, 1899, which directs that it shall be the duty of the owner of a vessel sunk in a navigable channel immediately to mark it with a buoy or beacon during the day and a lighted lantern at night. 30 Stat. 1152, c. 425, U. S. Comp. St. 1901, p. 3543.

The duty thus made imperative was wholly neglected. From the sinking of the Fahy to the collision with the Bulley nearly ten hours elapsed and no buoy or beacon, or mark of any kind, had appeared above the wreck. This failure to act, imperilling as it did the lives and property of those navigating a much frequented channel, is made unlawful by the statute and was negligence of a pronounced type.

It is argued that the word "immediately" as used in the statute means within a reasonable time. Undoubtedly the word should be construed having in view the circumstances of the particular situation in hand; what might be justifiable delay in one case would be culpable delay in another. Here, however, we are confronted with no problem of this character, for the reason that the owner was informed of the disaster shortly after 12 o'clock, and, had he acted promptly, he could have had a mark placed over the wreck within an hour thereafter. Instead of doing this he wasted valuable time in communicating with his insurers and the engineer corps and did not notify the Merritt & Chapman Wrecking Company until about 2 o'clock, when he asked them to locate the wreck and, incredible as it may seem, he gave no order to mark it. It was not until 4 o'clock that the order finally came to place a buoy above the wreck. Thereafter, the negligence in failing to act until after 6 o'clock was that of the wrecking company, but its fault in this regard must be imputed to the claimant. The law placed the duty of marking the wreck upon him and he cannot escape responsibility by delegating it to others. The Merritt-Chapman Company was his agent and he is responsible for its acts and omissions. No construction can be placed upon the statute which makes it inapplicable to an owner who delays action for six hours after knowledge of all the essential particulars, when he could have communicated with those in the vicinity of the wreck immediately and could have reached it in person in less than an hour.

The tugs Overbrook and Media are undoubtedly liable to the owner of the Fahy for their negligence in towing her upon the rocks, but are they liable to the Bulley for failure to mark the wreck? The district judge thought not and we are inclined to agree with him.

Digitized by Google

The statute places the duty to mark upon the owner and no one else; there is no divided responsibility and, if the statute is to be effectual, there cannot be.

When the towage service ceased by the sinking of the Fahy we think the tugs were justified in assuming that the duty imposed by statute upon the owner would be performed. The masters of the tugs knew that the master of the Fahy was uninjured and able to communicate with her owner which he did as soon as he arrived in New York, and they might well have supposed that if they took measures to buoy the wreck it would be regarded as an impertinent interference with the business of another to whom that duty was specifically delegated.

We do not intend to hold that conditions may not arise where a duty is imposed upon a tug to mark a wreck caused by her negligence. It may well be, where all representatives of the owner are drowned or where communication with him is impossible from any cause, that a duty rests upon the tug to mark the wreck. No such situation arises in the case at bar. There was nothing whatever to prevent the owner from marking the wreck; the tugs knew this and were justified in assuming that the owner would act as he was commanded to act by law.

The decree is affirmed with interest and costs.

(153 Fed. 868.)

HORMANN, SCHUTTE & CO. v. UNITED STATES.

UNITED STATES v. HORMANN, SCHUTTE & CO.

(Circuit Court of Appeals, Second Circuit. February 4, 1907.)

No. 92 (4,086).

1. CUSTOMS DUTIES—CLASSIFICATION—BUTTON MOLDS—BUTTON SHANKS.
   The provision in Tariff Act July 24, 1897, c. 11, § 1, Schedule N, par. 414, 30 Stat. 190 [U. S. Comp. St. 1901, p. 1674], for "button molds," includes articles commercially known as button shanks, consisting of pairs of metal disks so constructed that when a piece of cloth is placed on top of one of the disks, and they are subjected to pressure, a cloth-covered button is produced.

2. SAME—METAL BUTTON MOLDS.
   Tariff Act July 24, 1897, c. 11, § 1, Schedule N, par. 414, 30 Stat. 190 [U. S. Comp. St. 1901, p. 1674], provides that "buttons * * * and button molds * * * shall pay duty at the following rates," and the schedule of rates then prescribed mentions only "buttons." *Held*, that this provision for "buttons" should be construed as though reading "buttons and button molds," and that metal button molds should pay the rate assigned to metal buttons.

Cross-Appeals from the Circuit Court of the United States for the Southern District of New York.

Cross-appeals from order of the Circuit Court, reversing the decision of the Board of General Appraisers (G. A. 6,142, T. D. 26,687), who had affirmed the action of the collector in his assessment of duty on certain merchandise under the act of 1897.

The opinion of the court below is reported in 144 Fed. 707.

Digitized by Google

Everit Brown, for the importers.
D. Frank Lloyd, Asst. U. S. Atty.

Before WALLACE, TOWNSEND, and COXE, Circuit Judges.

TOWNSEND, Circuit Judge. The question involved in these appeals is as to the construction of paragraph 414 of Act July 24, 1897, c. 11, § 1, Schedule N, 30 Stat. 190 [U. S. Comp. St. 1901, p. 1674]. Said paragraph is as follows:

"Buttons or parts of buttons and button molds or blanks, finished or unfinished, shall pay duty at the following rates, the line button measure being one-fortieth of one inch, namely: Buttons known commercially as agate buttons, metal trousers buttons (except steel), and nickel bar buttons, one-twelfth of one cent per line per gross; buttons of bone, and steel trousers buttons, one-fourth of one cent per line per gross; buttons of pearl or shell, one and one-half cents per line per gross; buttons of horn, vegetable, ivory, glass or metal, not specially provided for in this act, three-fourths of one cent per line per gross, and in addition thereto, on all the foregoing articles in this paragraph, fifteen per centum ad valorem; shoe buttons made of paper, board, papier mache, pulp or other similar material, not specially provided for in this act, valued at not exceeding three cents per gross, one cent per gross; buttons not specially provided for in this act, and all collar or cuff buttons and studs, fifty per centum ad valorem."

The articles in question consist of pairs of metal disks, so constructed that when a piece of cloth is placed on top of one of the disks, and the two are subjected to pressure, a cloth-covered button is produced. These pairs of disks are commercially known as button shanks. They are concededly "parts of buttons and button molds." The appraiser returned them as metal button molds or parts of metal buttons, and the collector assessed each pair at three-fourths of one cent per line per gross and 15 per cent. ad valorem. A line is one-fortieth of an inch, and is used as a unit of measurement from the center to the circumference of the disk. The importers protested against said assessment, claiming that the articles were dutiable either at only 15 per cent. ad valorem, under said paragraph 414, as one of the "foregoing articles" not covered by the word "buttons," or at 50 per cent. ad valorem, under said paragraph, as "buttons [or parts of buttons] not specially provided for," or at 45 per cent. ad valorem, under paragraph 193 of said act, as "articles * * * not specially provided for * * * composed * * * of * * * metal * * * partly or wholly manufactured." The Board of General Appraisers overruled the protests, and affirmed the action of the collector, on the ground that the goods were metal molds, or parts of buttons. The importers appealed, and the court below reversed said decision, and held that the articles should be assessed at 45 per cent. ad valorem, under said paragraph 193 of the act. From this decision both parties appeal.

This case has been argued upon the fact, conceded by both sides, that these blanks are parts of buttons, and that it was the intention of Congress, as manifested by the language of said paragraph, that parts of buttons should be subjected to some duty. Counsel for the United States insists that the words "or parts of buttons" should be read into the paragraph wherever a class of buttons is provided for, and that then the relevant portions of the paragraph would read as follows:

Digitized by Google

"Buttons, * * * of metal [or parts of buttons of metal], * * * three-fourths of one cent per line per gross, and in addition thereto, on all the foregoing articles in this paragraph, fifteen per centum ad valorem."

But there are two objections to this construction. These disks are not parts of buttons of metal or of metal buttons, but of cloth-covered buttons, as distinguished from metal buttons, and therefore, as there is no specific provision for cloth-covered buttons, or parts thereof, they could only be assessed as parts of buttons, not specially provided for, at 50 per cent. ad valorem.

Again, if these disks should be thus assessed for duty as parts of buttons, each disk, being a part of a button, would pay the same rate of duty, according to line measurement, as a whole button.

We think these objections may be obviated, and the intention of Congress may be effectuated, by construing the provisions of the paragraph to refer to what these articles are proved and conceded to be; that is, not only parts of buttons, but something more, namely, button molds. The two witnesses testify that they are button molds, and one of the witnesses testifies as follows:

"Q. Do you call both parts of those things that match each other button molds, or do you call the two parts together button molds? A. The two parts together."

By this construction the pertinent portion of the paragraph may be applied as though it read "buttons [or parts of buttons, and button molds] * * * of metal," and thus the intention of Congress is effectuated, while only one assessment of duty is laid on each pair of disks constituting a button mold.

The decision of the Circuit Court is reversed, and the decision of the Board of General Appraisers, affirming the action of the collector, is affirmed.

(153 Fed. 870.)

BOWERS HYDRAULIC DREDGING CO. v. FEDERAL CONTRACTING CO.

(Circuit Court of Appeals, Second Circuit. April 30, 1907.)

No. 221.

1. SHIPPING—CHARTERS—CONSTRUCTION—DREDGES.

Where a dredge charter provided that the dredge should be able to deposit on shore an average of 300 cubic yards of material per hour, the owner merely warranted the dredge's capacity, and not that the dredge should in fact deposit that quantity of material.

2. SAME—EVIDENCE.

In a libel for the hire of a dredge, evidence *held* insufficient to show that the dredge did not pump 300 yards of material per hour, according to its warranted capacity.

3. SAME—CHARTER—CONSTRUCTION.

Where a dredge charter provided that it should be used as the charterer or his agents might direct in dredging material and putting the same ashore on the meadows adjoining the Passaic and Hackensack rivers, or at such other localities as the charterer might direct, the charter did not cover dredging material not ordinarily found in such operations, and for which such a dredge as that chartered by reason of its peculiar construction was not adapted.

Digitized by Google

4. ADMIRALTY—APPEAL—EVIDENCE—ADMISSION—PREJUDICE.

Where, upon a proper construction of a dredge charter, it did not cover the dredging of material not ordinarily found in such dredging operations, and for which a dredge of that construction was not adapted, the charterer, in a libel for the hire of the dredge, was not prejudiced by the admission of representations made by one of its officers as to the character of the material which was to be dredged.

Appeal from the District Court of the United States for the Southern District of New York.

This cause comes here on respondent's appeal from a decree of the United States District Court for the Southern District of New York in favor of libelant for $2,525.62 for hire of libelant's dredge. The opinion of the District Court is reported in 148 Fed. 290.

Ed. Norris, for appellant.

H. L. Cheyney, for appellee.

Before LACOMBE, TOWNSEND, and COXE, Circuit Judges.

TOWNSEND, Circuit Judge. The material portions of the agreement between the parties are as follows:

"The owner agrees to let, and the charterer agrees to hire, the said hydraulic dredge and its appurtenances, including necessary pontoons, discharge pipe including two thousand (2,000) feet of shore pipe, derrick scow and two coal scows for and during the working season of 1905, viz., from the date of delivery of said dredge and appurtenances to said charterer at Camden, N. J., on or about the first day of April, A. D. 1905, until on or about December 1st, A. D. 1905; delivery to be made by the charterer to the owner at any locality where said dredge may be at that time.

"Said dredge and appurtenances to be used as the charterer or its agents may direct in dredging material and putting same ashore on the property of the Hackensack Meadows Company, located on the Passaic and Hackensack rivers, N. J., or at such other localities as said charterer may direct. * * *

"The charterer shall pay for the use and hire of the said dredge at the rate of three thousand ($3,000) dollars per calendar month, excepting for delays at Delaware Breakwater and time lost for repairs, etc., as herein provided for, commencing on the day of delivery of the dredge at Camden, N. J., and at and after the same rates for any part of a month, hire to continue until redelivered to the owner as hereinbefore specified delivery to be made in same good order as when received by the charterer, ordinary wear and tear only excepted; payments to be made as hereinafter provided, and in case of default of such payment or payments as herein provided the owner shall have the right of withdrawing the said dredge from the service of the charterer. * * *

"It being understood and agreed that said dredge shall be able to deposit on shore an average of 300 cubic yards of material, scow measurement, through 2,000 feet of land pipe per hour."

The dredge commenced work under said contract on April 11, 1905, and the libelant on July 21st withdrew the dredge from the respondent's service, under the provision of the contract for nonpayment of the charter hire for the month of June. Payments were duly made up to July 1st, and this libel was filed to recover for the hire from July 1 to July 24, 1905, amounting to $2,322.48.

Error is assigned to the action of the court below in the following particulars:

"(1) In overruling the objections of the respondent to the * * * question * * * propounded by libelant's proctor to witness Sommers, as follows: 'Q. At the time that contract was entered into, what representations were

Digitized by Google

made to you by Mr. Thompson as to the character of the material which was to be dredged by your dredge? (Objected to as incompetent, that the contract speaks for itself. Objection overruled. Exception.) A. Mr. Thompson called on me and asked for terms for chartering the dredge to place material on Hackensack Meadow which would come from Bay Ridge or Erie Basin, and the contract was based on that statement entirely.'

"(2) In not allowing respondent damages to offset claim for hire for failure of dredge to carry out its agreement in not depositing 300 cubic yards of material per hour.

"(3) In not dismissing the libel with costs; that the contract sued upon was a land contract, and not a maritime contract; and that admiralty had no jurisdiction of this action."

The second assignment of error will be first considered. The respondent contended that the dredge did not, in fact, deposit on the shore an average of 300 cubic yards of material per hour, and that therefore libelant had broken its agreement. We do not so construe the agreement. It provided, not that the dredge should, in fact, deposit such an amount on the shore, but should be able to deposit such an amount. The evidence conclusively shows that the dredge did have a working capacity for an average of 300 cubic yards of ordinary material per hour, and that on several occasions it dredged such an average, and in fact so far exceeded it as to indicate that its actual capacity with ordinary material was from 500 to 600 yards per hour. The evidence claimed to show that the dredge did not pump 300 yards per hour falls far short of proving said fact. The testimony of the superintendent of the respondent was based merely on the recollection of an estimate obtained by measuring basins before and after dredging. Upon this point he testified that as close as he could figure the dredge averaged about 3,700 yards per day; that he measured it, and figured it up, and multiplied the length by the breadth and depth, but that he had no estimate or figures; that he did not give his estimate to the company; that the figures were in No. 2 when she sank in the Passaic river, two or three weeks before; that he had not the slightest idea how those figures were made up, or what they were, or how many days he allowed; that he did not charge up any days, but charged by the basin; and that he could not carry in his head how many hours he called a day.

Furthermore, there is no testimony in the record which shows the number of hours which were estimated in making up a day, except in so far as it may be inferred from a statement that the dredge worked constantly all the time.

The libelant claimed that the failure to dredge 300 yards per hour on certain occasions was due to the fact that the dredge encountered brickbats and stones in such quantity and of such a character that they materially lessened her capacity. The libelant further claimed that the dredging contract contemplated dredging for materials such as are ordinarily found in basins, and did not contemplate any kind of material which the respondent might choose to place there. In support of this contention, the testimony was admitted to which the first assignment of error is directed. Whether or not this oral testimony was admissible, on the theory that it covered a matter concerning which the written contract was silent, need not be decided. In any event, this evi-

Digitized by Google

dence could not prejudice the rights of the respondent, because upon a proper construction of the contract it must be held that it would not cover dredging material not ordinarily found in such dredging operations, and for which such a dredge, by reason of its peculiar construction, was not adapted.

The evidence, generally, indicates that the offset claimed by the respondent was only an afterthought when the respondent found itself financially embarrassed, and therefore unable to pay libelant's bill. The testimony and correspondence between the parties shows that the respondent paid for services up to the 1st of July without making any objection to the working of the dredge, and that on September 14, 1905, after the respondent had received the bill for the charter hire during the month of July, no objection was made to the bill, except for the last day of service, when the dredge broke down; and, even as late as October 17th, the respondent promised a remittance on account of libelant's bill.

The decree, in so far as this branch of the case is concerned, should therefore be affirmed.

Upon the further question raised by the third assignment of error, as to the jurisdiction of this court, we concur in the reasoning and conclusion of the court below, as stated in its opinion.

The decree is affirmed, with interest and costs.

(153 Fed. 873.)

UNITED STATES v. HUNTER & WITCOMBE.

(Circuit Court of Appeals, Second Circuit. March 26, 1907.)

No. 232 (3,978).

CUSTOMS DUTIES—RELIQUIDATION—DUTY OF COLLECTOR.

The Board of General Appraisers sustained an importer's protests, directing that the collector should reliquidate the duties at the rates appearing to be applicable "from the invoices, samples, or record," or, in the absence of sufficient data, should reliquidate at the rate of 40 per cent. ad valorem. *Held*, that the terms of this decision did not require the collector to consider data outside of the record made before the Board.

Appeal from the Circuit Court of the United States for the Southern District of New York.

This cause comes here upon appeal from a decision of the Circuit Court, which reversed a decision of the Board of General Appraisers (Ga. 5,985 [T. D. 26,210]), sustaining the reliquidation of duties on certain cotton goods.

The opinion of the court below is as follows:

WHEELER, District Judge. These are cotton goods which were assessed at 45 per cent. under paragraph 322 of the act of July 24, 1897, c. 11, § 1, Schedule I, 30 Stat. 179 [U. S. Comp. St. 1901, p. 1661]. They were countable under paragraphs 304 to 309, and on protest and appeal reliquidation was ordered: "(2) That where the particulars of count of threads, condition, weight, value, etc., necessary to reliquidation, can be ascertained from the invoices, samples, or record, reliquidation will proceed at the applicable rates thus ascertained; that as to all items and cases wherein these cannot be ascertained from the invoices, samples, or records, the statutory particulars above stated, or any of them, sufficient for reliquidation at the appropriate rate, such re-

Digitized by Google

liquidation is, for want of proof in support of the protests, denied, but in such cases reliquidation at the rate of 40 per cent. ad valorem, the minimum rate applicable to such goods as countable cottons, will follow." On reliquidation the collector reported: "I have to state that the entries in question were reliquidated in strict conformity with the decision of the Board of Appraisers of May 27, 1904, supra, and in the reliquidations, as the invoices failed to state whether the merchandise was bleached, unbleached, or colored, this office applied the rate of 40 per centum ad valorem, as directed by the Board in the second holding of said decision."

This appears to have been done upon the record, so called, as it came from the Board, without examining or considering the government samples; and the importers within 10 days from the reliquidation protested against this rate of 40 per cent. The protests are said not to have been in time, but they appear to have been within 10 days of this assessment of 40 per cent.

The statute requires one package of every invoice and at least one of every ten to be designated, opened, examined, and appraised, and ordered to the public stores for examination. Rev. St. § 2901 [U. S. Comp. St. 1901, p. 1921]. These packages belong to the collector for the purposes of classification and appraisal, and he could not be without means more or less convenient for making these appraisals. The protests against the reliquidation at 40 per cent. seem to be well founded and in due time; and it is not easy to see why the highest duty in a varying schedule should be laid for mere want of description.

Decision reversed.

J. Osgood Nichols, Asst. U. S. Atty. (Charles Duane Baker, on the brief), for United States.

Comstock & Washburn (J. Stuart Tompkins, of counsel), for importers.

Before LACOMBE, TOWNSEND, and COXE, Circuit Judges.

LACOMBE, Circuit Judge. The goods consisted of cotton curtains, table covers, and other similar merchandise, and were assessed for duty at 45 per cent. ad valorem as manufactures of cotton not specially provided for, under paragraph 322 of the Tariff Act of July 24, 1897, c. 11, § 1, Schedule I, 30 Stat. 179 [U. S. Comp. St. 1901, p. 1661]. The importers protested, claiming that they should be classified according to the various provisions of the "countable" paragraphs of the cotton schedule. These paragraphs (304 to 309) prescribe rates of duty which vary with the number of threads to the square inch, and vary also with the condition of the cotton cloth, whether bleached, dyed, colored, printed, etc., or not. In order to decide what rate of duty any particular piece of cotton cloth shall pay, evidence of some sort must be presented to the official who has to decide, showing how many threads there are to the square inch, and whether it is or is not bleached, dyed, etc. Upon receipt of these protests, the collector undertook to transmit to the Board of General Appraisers the invoices and all the papers and exhibits connected therewith, and the board undertook to examine and decide the case. Under section 16 of the customs administrative act of 1890 (Act June 10, 1890, c. 407, 26 Stat. 138 [U. S. Comp. St. 1901, p. 1935]), the Board is given power to take additional proof, and it is, and always has been, the practice for the importer and the government to offer to the Board any testimony which either side may think tends to support its contention. When the Board has decided such question, and no appeal

Digitized by Google

is taken, it is the duty of the collector to liquidate the entry accordingly.

In this particular case the papers and exhibits which the collector transmitted to the Board were not sufficient to show the precise character and condition of the different articles so as to enable it to determine the exact rates of duty, and the importers failed to produce the additional evidence, which it would seem they might readily have procured, to secure such determination. The decision of the Board was as follows:

"Where the particulars of count of threads, condition, weight value, etc., necessary to reliquidation, can be ascertained from the invoices, samples, or record, reliquidation will proceed at the applicable rates thus ascertained; that as to all items and cases wherein there cannot be ascertained from the invoices, samples, or records, the statutory particulars above stated, or any of them, sufficient for reliquidation at the appropriate rate, such reliquidation is, for want of proof in support of the protests, denied, but in such cases reliquidation at the rate of 40 per cent. ad valorem, the maximum rate applicable to such goods as countable cottons, will follow."

No appeal was taken from this decision. Upon reliquidation the collector made return that, as the invoices failed to state whether the merchandise was bleached, unbleached, or colored, he applied the rate of 40 per cent. ad valorem as directed by the Board.

Against this reliquidation the importers protested, upon the ground that the collector "should have reliquidated the duty at 35 per cent. ad valorem; the particulars shown on invoice and entry being sufficient to show that no higher rate could be applicable, but only 35 per cent., or some lower rate." If the facts were as stated in this protest, it is manifest that there was the same defect of proof which existed when the Board directed reliquidation at 40 per cent. There is no averment that the invoice and entry were sufficient to show exactly under which specific provision any article should be placed. Some contention is made upon the proof that the collector did not supplement the record before him by sending to the appraiser's office or elsewhere for samples of the goods; but this was not an original liquidation. The Board, upon a case made by the importers, had decided that the proper rate was 40 per cent., and gave them one more chance to show exactly under what clauses their various goods belonged. If the record sent back to the collector from the Board lacked proof sufficient to show this, it was for the importers to supply such further evidence as the decision allowed them to produce. Moreover, an examination of the record now before us leads to the conclusion that the samples from the appraiser's office would not have helped the situation, unless they were supplemented by evidence of the importers as to the meaning of certain arbitrary letters "P," "S. W.," etc., found upon the invoices. But the decision of the Board admitted no such proof. Reliquidation was to be had on "invoices," "samples," and "record," which we assume means the record already made, and which was before the Board.

We concur, therefore, with the Board, in the conclusion that there was not sufficient data before the collector to enable him to reliquidate at lesser rates than the 40 per cent. which the Board had already fixed upon "for want of proof in support of the protests."

The decision of the Circuit Court is reversed.

Digitized by Google

(153 Fed. 876.)

WHARTON v. UNITED STATES.

(Circuit Court of Appeals, First Circuit. March 27, 1907.)

No. 661.

EMINENT DOMAIN—CONDEMNATION OF PROPERTY—RIGHT TO COMPENSATION.

Lots on a tract of land were conveyed by deeds containing a condition prohibiting their use for certain purposes, such as for the erection and maintenance of any slaughterhouse, smith shop, steam engine or distillery, brewery or saloon, etc., and providing that such condition might be enforced by action by the owner of any other lot on the tract. Certain of such lots were condemned by the United States as a site for a seacoast fortification. *Held*, that these particular conditions did not create a true easement as known to the common law in favor of other lot owners, nor were they intended to apply to public works, but merely to restrict what might be done by persons of business corporations in their own interest, and that, under the circumstances the owners of lots not taken had no interest for which they were entitled to compensation.

In error to the Circuit Court of the United States for the District of Rhode Island.

For opinions of Circuit Court in same case, see 112 Fed. 622.

William P. Sheffield, Jr., and William R. Harvey (Max Levy, on the brief), for plaintiff in error.

Charles A. Wilson, U. S. Atty., and Amasa M. Eaton, for the United States.

Before COLT, PUTNAM, and LOWELL, Circuit Judges.

PUTNAM, Circuit Judge. This is a proceeding by the United States for the condemnation of certain lands at Conanicut Island, in the state of Rhode Island. The petition of the United States declares that the purpose was for "the location, construction and prosecution of works for fortification and coast defense." The plaintiff in error intervened, claiming damages in behalf of two distinct matters. The first related to a certain right of way, with regard to which we are not concerned. The judgment sustained his petition so far as that was concerned; but, as to all other claims, it denied him any relief. Thereupon he took out this writ of error.

We need add little, if anything, to the statement of the facts with reference to the issue before us as given in the opinion of the learned judge of the Circuit Court, as follows:

No land of these claimants is actually taken by the decree of condemnation. Nor do their lands adjoin the lands taken by the United States. The claimants are owners of lots of that large tract at the southern end of Conanicut Island, at the entrance of Narragansett Bay, known and platted as "Ocean Highlands." Many lots on this plat have been sold by the Ocean Highland Company subject to restrictions or conditions, the design whereof is to make every portion of Ocean Highlands subject thereto for the benefit of every other portion. Certain lots subject to these restrictions and belonging to other persons have been condemned by the United States for "the location, construction and prosecution of works for fortifications and coast defense," otherwise described as "military uses."

Digitized by Google

The claimants first assert that the taking of these lands has destroyed the rights to restrict their use, and that these rights of restriction are appurtenant to the estate of the claimants as "negative easements." The claimants next contend that the destruction of these "negative easements" is a taking of their property by the United States, and that they are entitled to compensation therefor. For the United States it is contended that these rights are not taken, and that the claimants are not entitled to compensation.

The restrictive provision contained in the deeds of part of the land actually taken is as follows:

"But this deed is on condition that no slaughter house, smith shop, steam engine, furnace, forge, bone-boiling establishment, iron or brass foundry, no manufactory of chemicals of any description, of gas, soap, fish guano, fish oil, kerosene or other oil, no brewery, distillery, bar, ale house, drinking saloon, or other place for the manufacture, compounding or selling of any kind of intoxicating liquors in any manner or form, shall ever be erected, located, used, or suffered, in or upon any part of said granted land; and that no other noxious, dangerous or offensive trade or business whatever shall ever be done, carried on or permitted in or upon said land or any part thereof; with the understanding, however, that this shall not exclude from said land any invention, apparatus or machine, appurtenant to a dwelling house, for lighting or warming the same or supplying the same with water; and said conditions may be at any time enforced, by action, injunction or otherwise, by said grantor, its successors and assigns, against said grantee and his heirs and assigns forever, and also by the owner or owners, occupant or occupants, for the time being, of any portion of said Highlands, on the said plat thereof, against any owner or owners, occupant or occupants for the time being of said granted lands, or of any part thereof, forever; the design being to have the conditions hereof in every deed given by said grantor in the premises and make every portion of said Ocean Highlands subject to said condition for the benefit of every other portion thereof forever."

As stated in the opinion from which this quotation is made, no land owned by the plaintiff in error was taken by the condemnation. If any had been so taken, then the interests appertaining to that land, either at law or in equity, in any manner, might properly have been considered in determining its value; and the same would have been true if the plaintiff in error had had any easement as known to the law in or over the lands which have in fact been taken. Under the present circumstances, the only possible interests for which the plaintiff in error could recover, if any, are those arising from the conditions contained in the various deeds shown by what has already been stated, coupled with the facts that the deed or deeds under which he holds contain the same conditions, and are part or parts of the same plan.

The learned judge of the Circuit Court pointed out various reasons why the plaintiff in error had no right or interest which the law requires to be taken care of in this proceeding. It appears from the four corners of all that is contained in the deeds, as indicated by the enumerations therein stated, that the conditions are not to be construed as having reference to ordinary public works, or the incidents thereof. They relate to what might be done in individual interests by persons or business corporations. The purpose of the United States in acquiring the property does not appear to be in any substantial particular inconsistent with the conditions of the deeds or destructive thereof.

Digitized by Google

We pass by the question raised by the learned judge whether a provision directly aimed against the taking of the lands in question for public uses would not be contrary to public policy, and we observe only that the general outlook of the conditions is in the direction of that taken by him; and, especially, we are impressed by the fact that, after the long enumeration of various structures, the conditions close:

"And that no other noxious, dangerous or offensive trade or business whatever shall ever be done, carried on, or permitted in or upon said land or any part thereof."

The words "trade or business" give a color to all that precedes them; and this color is intensified by the words "no other" in this connection, signifying that all that precedes is of the same class as what follows. It would be a long stretch of the ordinary rules of construction to hold that these conditions would apply to a steam engine which proved to be a necessary incident of a public park, a public arboretum, a public bathing establishment, or any other great public pleasure resort, as to which it could be only a very minor incident. The position of the learned judge of the Circuit Court on this particular topic strikes us favorably, and we regard it as sufficient to meet the case of the plaintiff in error.

Whatever interest the plaintiff in error has with regard to the lands taken by the United States does not constitute a true easement as known to the common law. Had the deeds contained covenants, they would have been recognized at the common law so far as suits on the covenants between the parties to them were concerned. They contain only conditions. Nevertheless, in equity such conditions are treated to a certain extent as covenants running with the land, and enforceable by decrees for specific performance between subsequent holders who purchased with notice. Such rights are often incorrectly spoken of as negative easements; but what are really negative easements is pointed out in Gale on Easements (7th Ed. 1899), 19 and sequence, a work of the highest authority, where easements known to the common law are catalogued and classified. The better authorities speak of such rights as analogous to negative easements. If they were in fact easements, they would constitute true hereditaments, and the plaintiff in error would be entitled to the allowance of damages, even if nominal. They are subject to the general rules by virtue of which equity refuses to require specific performance of obligations which are unreasonable, or which become so under a change of circumstances, or which involve only nominal values. We need not, however, consider these difficulties in the way of the plaintiff in error, or other possible difficulties, because what we have already said fully disposes of the litigation.

The judgment of the Circuit Court is affirmed.

Digitized by Google

(153 Fed. 945.)

HULL v. BURR.

(Circuit Court of Appeals, Fifth Circuit. April 2, 1907.)

No. 1,639.

1. BANKRUPTCY—SUITS BY TRUSTEES—JURISDICTION OF DISTRICT COURT.

A trustee in bankruptcy is vested by the act of 1898 with all the rights and title of the bankrupt and of his creditors, and, when he seeks to enforce rights or to recover property in a district other than that of the court which appointed him, he stands in the position of those whose rights he has acquired, and can resort only to the same courts, state or federal, and is confined to the same remedies, subject to the exceptions made by Act July 1, 1898, c. 541, §§ 23b, 70e, 30 Stat. 552, 565 [U. S. Comp. St. 1901, pp. 3431, 3452], as amended in 1903 (Act Feb. 5, 1903, c. 487, §§ 8, 16, 32 Stat. 798, 800 [U. S. Comp. St. Supp. 1905, pp. 686, 690]).

2. SAME.

A District Court of the United States is without jurisdiction of a suit by a trustee in bankruptcy appointed in another district to recover property from one to whom it was conveyed by the bankrupt more than four months prior to the bankruptcy, and who took possession of it after the bankruptcy; the ground of recovery alleged being that the conveyance was in fact a mortgage, unless the defendant consents to such jurisdiction. Such an action is not one of which the District Court as a court of bankruptcy is given jurisdiction without such consent, by Bankr. Act July 1, 1898, c. 541, § 23b, or section 70e, 30 Stat. 552, 565 [U. S. Comp. St. 1901, pp. 3431, 3452], as amended in 1903 (Act Feb. 5, 1903, c. 487, §§ 8, 16, 32 Stat. 798, 800 [U. S. Comp. St. Supp. 1905, pp. 686, 690]).

[Ed. Note.—Jurisdiction of federal courts in suits relating to bankruptcy, see note to Bailey v. Mosher, 11 C. C. A. 313.]

3. SAME.

Bankr. Act July 1, 1898, c. 541, § 70e, 30 Stat. 565 [U. S. Comp. St. 1901, p. 3452], as amended in 1903 (Act Feb. 5, 1903, c. 487, § 16, 32 Stat. 800 [U. S. Comp. St. Supp. 1905, p. 690]), does not confer on a court of bankruptcy jurisdiction of a suit brought by a trustee thereunder to avoid a transfer made by a bankrupt, unless by consent of the defendant, which is made a condition to such jurisdiction in all suits by trustees by amended section 23b with the exceptions expressly mentioned therein.

4. SAME—COURTS OF BANKRUPTCY—ANCILLARY JURISDICTION.

Courts of bankruptcy have no jurisdiction except that conferred by statute; and Bankr. Act July 1, 1898, c. 541, 30 Stat. 544 [U. S. Comp. St. 1901, p. 3418], neither expressly nor impliedly provides for summary proceedings, or for auxiliary or ancillary proceedings, in another court of bankruptcy, in aid of the bankruptcy court which made the adjudication and has charge of the bankrupt's estate.

Petition to Superintend and Revise Proceedings from the District Court of the United States for the Southern District of Florida.

The respondent, Arthur E. Burr, filed in the court below the following petition:

"In the District Court of the United States in and for the Southern District of Florida.

"In the Matter of the Petition of Arthur E. Burr, Trustee in Bankruptcy of the Estate of the Port Tampa Phosphate Company, a Corporation, against Joseph Hull, of Savannah, in the State of Georgia.

"Your petitioner, Arthur E. Burr, trustee in bankruptcy of the estate of the Port Tampa Phosphate Company, a corporation, respectfully represents that, on November 9, 1905, a petition in bankruptcy was filed in the District Court of the United States for the District of Massachusetts, against the Port

Digitized by Google

Tampa Phosphate Company, a corporation duly established according to the laws of the commonwealth of Massachusetts; that thereafter, on the 27th day of November, 1905, the said Port Tampa Phosphate Company was duly adjudged bankrupt; that your petitioner was duly appointed trustee of the estate of said bankrupt corporation on the 27th day of December, 1905, and thereafter duly qualified; that your petitioner brings this petition in his capacity as such trustee in bankruptcy of said corporation.

"On or about May 27, 1905, said bankrupt corporation caused to be executed and delivered to the respondent, Joseph Hull, a deed of certain real estate and personal property then belonging to and owned by said corporation, and situated in the county of Polk, and state of Florida, to wit:

"The south half and the south half of the northeast quarter, and the southeast quarter of the northwest quarter of section thirty-four (34) in township twenty-nine (29) south, range twenty-three (23) east, Polk county, Florida; also," etc. (The description of the fixtures is omitted.)

"Said deed was caused by said corporation to be made, executed, and delivered to the respondent as and for security for certain money, at that time advanced, and for money to be thereafter advanced, to said corporation by the respondent.

"As a part of the same transaction, and at or about the same time, to wit, June 9, 1905, the said Joseph Hull and said bankrupt corporation executed and delivered a certain instrument and agreement of defeasance, wherein said Hull agreed to reconvey to the said bankrupt corporation all of the said above-described property upon the payment to the said Hull of certain sums set forth in said instrument. Your petitioner is informed and believes, and therefore avers, that said Hull duly recorded said deed to said property.

"On the 9th day of November, 1905, and for a long time prior thereto said bankrupt corporation was the owner of and in actual and legal possession of said property, both real and personal, and thereafter your petitioner by operation of law became vested with the title to all the property belonging to the bankrupt corporation on the 9th day of November, 1905, and came into legal possession thereof as of the said date. After said date, and after the filing of said petition in bankruptcy, the respondent well knowing all of the aforesaid facts, and that the said property was the property of the said trustee of the aforesaid corporation, on or about December 15, 1905, entered upon said real estate and took possession of said above-described personal property, and now holds the same, both real and personal property, and has refused to deliver or convey the same or any part of it to your petitioner.

"Said deed and instrument of defeasance constitute in law and equity a mortgage, and said property is now the property of your petitioner as such trustee, subject to a lien in favor of the respondent for the amounts loaned and advanced by him to said bankrupt corporation.

"Your petitioner is without information, and therefore cannot aver as to the amount of indebtedness due the respondent upon November 9, 1905, by said bankrupt corporation, for the reason that the amount thereof is entirely within the knowledge of the respondent; but your petitioner is informed and believes, and therefore avers, that the amount of said indebtedness due said Hull by said corporation at said time did not exceed the amount of twenty-five thousand dollars ($25,000).

"Said property is of great value, and is worth a large amount in excess of said indebtedness due said Hull by said corporation.

"Since said Hull took possession of said property on December 15, 1905, he has used and operated it, and mined a large amount of phosphate therefrom. Your petitioner is unable to state the exact amount received by said Hull from said use and operation aforesaid, as your petitioner is unable to obtain an accounting thereof from said Hull. * * *

"Your petitioner is informed and believes and avers that there is danger that said Hull may make a conveyance of said real estate to a bona fide purchaser for value.

"Wherefore your petitioner prays:

"(1) That this honorable court may issue forthwith a preliminary decree restraining and enjoining said Joseph Hull from conveying or transferring said real property until the further order of this court.

Digitized by Google

"(2) That said deed and instrument of defeasance may be declared to be a mortgage.

"(3) That all of said property, both real and personal, be declared to be the property of your petitioner as such trustee.

"(4) That an accounting may be had of the amount due said Hull by said bankrupt corporation on November 9, 1905; and that a further accounting may be had of the amount received by said Joseph Hull from the operation and use of said property since December 15, 1905; and that this court will determine the amount of the lien now held by said Joseph Hull.

"(5) That said Joseph Hull be ordered forthwith to convey and deliver to your petitioner all of said personal property taken by him from the possession of your petitioner, or to account for the value thereof.

"(6) That your petitioner may be authorized and empowered to sell at private sale all of said property either subject to the lien, if any, of the said Joseph Hull, or free from incumbrances, reserving to the said Joseph Hull the right to be reimbursed out of the proceeds of the sale of the said real estate.

"(7) That due and proper process be issued forthwith out of this honorable court to enforce its decrees and orders.

"(8) For such other and further general relief as to this honorable court seems meet.

"And that a writ of subpœna of the United States of America may issue directed to the said Joseph Hull, commanding him on a certain day to appear and answer to this petition, and to abide by and perform such orders and decrees in the premises as to this honorable court may seem meet and proper."

The petition was signed by petitioner's solicitor, and was duly verified.

The respondent, Joseph Hull, appeared, and filed the following plea to the jurisdiction:

"Now comes the above-named defendant, Joseph Hull, and appearing for the special purpose, and no other until the question herein raised is decided, of objecting to the jurisdiction of this court, doth object to this court entertaining the petition of Arthur E. Burr, as trustee in bankruptcy of the estate of the Port Tampa Phosphate Company, a corporation, against this defendant, or further proceedings thereon, because under the Constitution and laws of the United States a District Court of the United States is precluded from entertaining and adjudging any such matter or controversy as is by said petition set up; and prays judgment whether this court has jurisdiction, and asks to be dismissed with his costs."

The plea was signed by counsel and sworn to.

The court overruled the objection to its jurisdiction, and thereupon Joseph Hull filed his petition in this court to revise and reverse the decree of the District Court, alleging that "under the bankruptcy law of the United States any remedy the said Burr has must be pursued by proceedings at law or in equity in the state or federal court as they may have jurisdiction and otherwise than by summary proceeding in bankruptcy."

H. Bisbee and George C. Bedell, for petitioner.

E. R. Gunby, for respondent.

Before PARDEE, McCORMICK, and SHELBY, Circuit Judges.

SHELBY, Circuit Judge, having made the foregoing statement of the case, delivered the opinion of the court.

1. The sole question to be decided is whether or not the District Court had jurisdiction of the case presented by the petition of the trustee. The question must, of course, be answered by an examination of the relevant parts of the bankruptcy act of 1898. Act July 1, 1898, c. 541, 30 Stat. 544 [U. S. Comp. St. 1901, p. 3418]. The second section of the act makes the District Courts of the United States courts of bankruptcy and confers on them jurisdiction. Clauses 3 and 7 of the section are relied on as conferring jurisdiction in this case.

Digitized by Google

By those subdivisions jurisdiction is conferred to "(3) appoint receivers or the marshals, upon application of parties in interest, in case the courts shall find it absolutely necessary for the preservation of estates to take charge of the property of bankrupts after the filing of the petition and until it is dismissed, or the trustee is qualified * * *"; and to "(7) cause the estates of bankrupts to be collected, reduced to money and distributed, and determine controversies in relation thereto, except as herein otherwise provided." The jurisdiction conferred by the seventh clause is limited by the words "except as herein otherwise provided." These words refer to section 23 of the act, which relates to the jurisdiction of the United States and state courts. We here insert that section, placing in italics the amendment of 1903:

"Sec. 23. (a) The United States Circuit Courts shall have jurisdiction of all controversies at law and in equity, as distinguished from proceedings in bankruptcy, between trustees as such and adverse claimants concerning the property acquired or claimed by the trustees, in the same manner and to the same extent only as though bankruptcy proceedings had not been instituted and such controversies had been between the bankrupts and such adverse claimants.

"(b) Suits by the trustee shall only be brought or prosecuted in the courts where the bankrupt, whose estate is being administered by such trustee, might have brought or prosecuted them if proceedings in bankruptcy had not been instituted, unless by consent of the proposed defendant, *except suits for the recovery of property under section sixty, subdivision b, and section sixty-seven, subdivision e.*" 30 Stat. 557, c. 541 [U. S. Comp. St. 1901, p. 3431], amended by Act Feb. 5, 1903, c. 487, § 8, 32 Stat. 797 [U. S. Comp. St. Supp. 1905, p. 686].

Disregarding the amendment for the present, this section, as originally written, confers jurisdiction on the Circuit, not on the District, Courts of all controversies at law and in equity, as distinguished from proceedings in bankruptcy, between trustees and adverse claimants of the bankrupt's property. But this jurisdiction is conferred to the same extent only as the bankruptcy proceedings had not been instituted and such controversies had been between the bankrupt and the adverse claimant. The trustee can sue, in such cases, only in the courts where the bankrupt could have sued if proceedings in bankruptcy had not been instituted. The petitioner who sued in the District Court in the case at bar sued as the trustee in bankruptcy of a Massachusetts corporation. The parts of the act quoted, if we construe the petition as presenting a controversy at law or in equity, as distinguished from a proceeding in bankruptcy, confers jurisdiction on such United States Circuit Courts and state court as would have had jurisdiction of such a suit by the corporation if there had been no bankruptcy proceeding. But the statute does not confer jurisdiction in such cases on a United States District Court, not even when it is the court of adjudication. Bardes v. Hawarden Bank, 178 U. S. 524, 20 Sup. Ct. 1000, 44 L. Ed. 1175.

The opinion of the Supreme Court in Bardes v. Hawarden Bank, construing the act as it stood before the amendment, seems to us conclusive of the proposition that the court of bankruptcy did not have jurisdiction of the case made by the petition, if the petition presents a controversy at law or in equity within the meaning of section 23 of the act.

Digitized by Google

Does the amendment of 1903 affect the case at bar? The amendment makes exceptions to the limitation on the jurisdiction of the District Courts, and thereby extends their jurisdiction; but the extension does not include cases like that presented by the petition of the trustee. The amendment confers jurisdiction on the District Courts in "suits for the recovery of property under section sixty, subdivision b, and section sixty-seven, subdivision e." Turning to section 60, we find that subdivision "a" defines a preference, and that subdivision "b" provides that the trustee may sue the person receiving a preference and recover the property or its value. Under the amendment, suit for that purpose may be brought in "any court of bankruptcy." The case at bar involves no question of preference. Examining section 67, subd. "e," we find that it relates to fraudulent conveyances by the bankrupt and conveyances made within four months prior to the time of filing the petition in bankruptcy. The amendment confers jurisdiction on any court of bankruptcy of suits to recover property so conveyed. The petition of the trustee in the case at bar contains no charge of fraud, and the deed and contracts in question were executed more than four months before the beginning of the bankruptcy proceedings. It follows that the amendment quoted has no application to this case. The case, when viewed as a controversy at law or in equity, not being affected by the amendment, must be governed by the principles announced in Bardes v. Hawarden Bank, supra, which denies the jurisdiction of the District Court.

2. The only other part of the act that might be referred to in this connection is section 70, subd. "e." We quote it here, placing the part of it added by the amendment of 1903 in italics:

"(e) The trustee may avoid any transfer by the bankrupt of his property which any creditor of such bankrupt might have avoided, and may recover the property so transferred, or its value, from the person to whom it was transferred, unless he was a bona fide holder for value prior to the date of the adjudication. Such property may be recovered or its value collected from whoever may have received it, except a bona fide holder for value. *For the purpose of such recovery any court of bankruptcy, as hereinbefore defined, and any state court which would have had jurisdiction if bankruptcy had not intervened, shall have concurrent jurisdiction.*" 30 Stat. 566, c. 541 [U. S. Comp. St. 1901, p. 3452], amended by Act Feb. 5, 1903, c. 487, § 16, 32 Stat. 800 [U. S. Comp. St. Supp. 1905, p. 690].

Such jurisdiction as is conferred by this language relates to suits by the trustee to "avoid any transfer by the bankrupt of his property which any creditor of such bankrupt might have avoided." The petition of the trustee in the instant case does not seek to avoid a transfer. It does not allege that the deed to Hull was made under circumstances that made it voidable at the suit of his creditors. In fact, it is not alleged in the petition that the corporation owed any debts at the date of its transfer to Hull. No charge of fraud against creditors is made. On the contrary, it is alleged that the deed to Hull was based on a large consideration, not less than $25,000. A careful consideration of the trustee's petition convinces us that it was not intended as a suit under section 70e, and that subdivision has not been cited by learned counsel for the trustee as conferring jurisdiction.

But there is another reason why section 70e cannot be relied on as

Digitized by Google

giving the court below jurisdiction in this case. Subdivision "b" of section 23 provides that trustees shall sue only in the courts where the bankrupt might have brought suit, if proceedings in bankruptcy had not been instituted, "unless by consent of the proposed defendant." This limitation is general in its terms, embracing all suits. Congress, by the amendment of 1903, excepted from this limitation certain suits which may now be brought in the bankruptcy courts without the consent of the defendant. The suits excepted are "suits for the recovery of property, under section 60, subd. "b," and section 67, subd. "e." The statute requiring "the consent of the proposed defendant" stands as enacted, with no other exception than the one named. If the exception had included suits for the recovery of property under section 70, subd. "e," then, clearly, suits under that subdivision could have been brought by the trustee in a court of bankruptcy without the consent of the defendant. It is stated by Collier, in his work on Bankruptcy ([5th Ed.] p. 266), that the amendment was at first so written, but that the Senate Judiciary Committee struck out "and section 70 subdivision e." The act, as it was passed by Congress, leaves suits under that subdivision still subject to the provision of section 23b, requiring the consent of the proposed defendant. Construing section 70e in connection with section 23b, it appears that the former conferred jurisdiction on courts of bankruptcy of suits to avoid transfers of his property made by the bankrupt which any creditor of the bankrupt might have avoided, but that, although jurisdiction of the subject-matter is conferred, it can only be exercised over the persons of the defendants by their consent. The reasons for this conclusion are clearly and ably stated by Judge Adams, in Gregory v. Atkinson (D. C.) 127 Fed. 183, 185.

Even if the trustee's petition was construed as presenting a case under section 70, subd. "e," the court of bankruptcy would not have jurisdiction without the consent of the defendant.

3. But it may be that the trustee's petition is subject to another construction. It is alleged that the bankrupt was, at the date of the bankruptcy proceedings, in possession of the real estate in question, and that the petitioner by operation of law became vested with the title to all the property belonging to the bankrupt corporation, and came into legal possession thereof; and that the defendant, Joseph Hull, after the petitioner's possession and right accrued, took wrongful possession of the property and refused to surrender it. If the petition be construed to be a summary proceeding to obtain the possession of the property—a "proceeding in bankruptcy"—and not a controversy at law or in equity, the question is: Would the District Court then have jurisdiction? Many cases have been cited that bear more or less on this question, and it may be conceded that, placing such construction on the trustee's petition, the District Court of the United States for the Northern District of Florida would have had jurisdiction, if it had been the court of adjudication. But the petition shows that the corporation was adjudicated a bankrupt by a United States District Court in the state of Massachusetts, which has charge of the bankrupt's estate and of its collection, distribution, and settlement. Cases cited by counsel that discuss the jurisdiction of

Digitized by Google

the court of adjudication that has charge of the collection, distribution, and settlement of the bankrupt's estate, are not responsive to the question raised by this case, and cases construing the bankruptcy acts of 1867 and 1841 are not controlling, because each of those acts contained a provision conferring on the Circuit and District Courts of the United States concurrent jurisdiction of suits at law and in equity between the assignee in bankruptcy and an adverse claimant of the property of the bankrupt. The act of 1898 contains no such provision.

Courts of bankruptcy are created by statute, and they have no jurisdiction except that conferred by statute, either expressly or by implication. The second section of the bankruptcy act of 1898 makes the District Courts courts of bankruptcy, and creates their jurisdiction. There are 19 subdivisions of the section enumerating the powers conferred. The subdivisions 3 and 7, especially relied on by the learned counsel, have already been quoted. The section vests courts of bankruptcy with the jurisdiction described in its 19 subdivisions "within their respective territorial limits as now established, or as may hereafter be changed." There are many cases construing the present statute, so well known that it is useless to cite them, holding that the court which adjudges a person a bankrupt has the power and jurisdiction in summary proceedings to take possession by receivers or marshals of the property of the bankrupt situate and being within the territorial jurisdiction of the court. The circumstances under which this power will be exercised or refused by the court of adjudication need not be discussed here. The question here relates, not to the jurisdiction of a bankruptcy court which has adjudicated a person a bankrupt, but to the jurisdiction of a court of another district which is called on to exercise summary jurisdiction in aid of another court of bankruptcy which made the adjudication and has charge of the bankrupt's estate.

We find no provision of the act which expressly or impliedly makes provision for summary proceedings or for auxiliary or ancillary proceedings in another court of bankruptcy in aid of the bankruptcy court that made the adjudication and has charge of the bankrupt's estate. Congress, of course, could have adopted a scheme by which every District Court would be charged with the collection or administration of the bankrupt's property in aid of or ancillary to the jurisdiction of the court of adjudication, but we find in the act no hint of such intention. On the contrary, the act limits the jurisdiction of the bankruptcy courts, including even the one of adjudication, by providing that suits by the trustee—with the exceptions we have noted—shall only be brought or prosecuted in the courts where the bankrupt whose estate is being administered by such trustee might have brought or prosecuted them if proceedings in bankruptcy had not been instituted.

We are of opinion that the District Court erred in overruling the plea to the jurisdiction.

The trustee is vested by the act with all the rights and title of the bankrupt, as well as with the rights of the bankrupt's creditors, and, when he seeks to enforce rights or to recover property in another district outside of the territorial jurisdiction of the court which appointed him, he stands in the position of those whose rights he has

Digitized by Google

acquired, and can resort only to the same courts, state or federal, and is confined to the same remedies. In re Williams (D. C.) 120 Fed. 38; In re Williams (D. C.) 123 Fed. 321; In re Von Hartz, 142 Fed. 726, 74 C. C. A. 58; In re Granite City Bank, 137 Fed. 818, 822, 70 C. C. A. 316. This general rule is, of course, subject to the exceptions made by the amendment of 1903, which has been quoted in this opinion and shown not to be applicable to this case.

The petition for revision is allowed, the decree of the court of bankruptcy is reversed, and the petition of the trustee is dismissed.

(153 Fed. 952.)

PERKINS v. GIBBS et al.

(Circuit Court of Appeals, Eighth Circuit. April 30, 1907.)

No. 2,475.

1. WILLS—NATURE OF ESTATE DEVISED—VESTED REMAINDER.

Where a testator devised and bequeathed his residuary estate to his widow for life or until her remarriage, with remainder to his son and daughter in equal shares, the latter took at once a vested interest in remainder in the real estate which was alienable under the laws of Minnesota.

[Ed. Note.—For cases in point, see Cent. Dig. vol. 49, Wills, § 1481.]

2. SAME—TRANSACTIONS BETWEEN DEVISEES—CREDITORS' SUIT—GROUNDS FOR RELIEF—SUFFICIENCY OF EVIDENCE.

A testator devised and bequeathed his estate in equal shares to his son and daughter, subject to a life interest in his widow terminable on her remarriage. All of such parties entered into a written agreement admittedly made in good faith for an amicable division of the estate, by which the widow and son, who were also executors, agreed to convey their interest in certain real estate to the daughter, and she was to convey her interest in other real estate to the son, and also to release her claim to any share of an indebtedness owing by him to the estate and to money which he had misapplied as executor. Later, when the son had become largely indebted and insolvent, he and the widow executed the conveyance to the daughter; the deed reciting that it was made in consideration and compliance with such agreement. The son obtained the property which he was to have by the agreement, and was not called upon to pay the amount which he owed the estate. *Held*, that the conveyance to the daughter was based on a good and meritorious consideration; also, on the evidence, that it was made as recited therein in good faith pursuant to the prior agreement, and not for the purpose of defrauding the son's creditors, as charged in a creditors' bill.

Appeal from the Circuit Court of the United States for the District of Minnesota.

This was a creditors' bill brought by George F. Perkins against Clara J. Gibbs, Albert L. Gibbs, her husband, the Cloquet Lumber Company, and several other defendants alleged to have some interest in the lands in controversy, to set aside certain deeds made by the judgment debtor as fraudulent. The several defendants other than those just mentioned do not appear to have been served with process. Those mentioned for their answer denied the alleged fraud and asserted that the title held by defendant Clara J. Gibbs was valid, subject only to certain timber rights existing under defendant Gibbs in favor of the Lumber Company.

The facts as disclosed by the record are substantially as follows: Reuben Whiteman died in Dansville, Livingston county, N. Y., where he had long resided, in March, 1888, leaving a widow, Rebecca, a son, Alonzo, and a daugh-

Digitized by Google

ter, Clara. He left a will which was duly probated in New York and afterwards in St. Louis county, Minn. where the land in question is situated, by which, after making certain specific legacies, he devised and bequeathed the rest and residue of his estate, real and personal, to his wife for life, or until she should again marry, and the remainder after the expiration of the wife's estate to his son and daughter in equal parts. The wife married again in 1895. Her particular estate ceased, and the son and daughter were let into the full enjoyment of their vested estate in remainder. Whiteman's estate consisted of certain personal property, a paper mill in Dansville, N. Y., some land elsewhere in New York, and about 13,000 acres of uncultivated land in Minnesota and Wisconsin. The widow and son were made executors of the will, qualified as such, and proceeded under the supervision of the Surrogate Court of Livingston county, N. Y., until after January, 1890, with the administration of the estate. On January 25th of that year, when, so far as this record discloses, there were no unsatisfied creditors of the estate and when the widow, son, and daughter were solely interested therein, they all joined in a contract providing for a voluntary partition or division of the estate, according to the respective interests of the parties. That contract was made and executed by and between Alonzo J. Whiteman individually and as executor as party of the first part, Rebecca E. Whiteman individually and as executrix as party of the second part, and Clara J. Whiteman as party of the third part, and is in the following words:

"That for and in consideration of the mutual promises and agreements herein contained, and of the sum of one dollar by each to the other in hand paid, the receipt whereof is hereby acknowledged, it is agreed:

"First. That the parties of the first and second parts shall and will execute and deliver to the party of the third part a good and sufficient deed or deeds, quitclaiming, releasing, and conveying all their individual right, title, and interest, and the estate and right of dower in Julia N. Whiteman, the wife of the party of the first part to the party of the third part, in and to all and singular the lands in the states of Minnesota and Wisconsin, now belonging to the estate of Reuben Whiteman, deceased, and comprising about twelve thousand nine hundred and forty (12,940) acres, and which are situated and described as follows: [Then follows a detailed description of the land and a mention of the time and place for delivery of deeds.] * * *

"Third. The party of the third part will also, at said time and place, upon accepting said deed or deeds, execute and deliver to the party of the first part a quitclaim deed for conveying and releasing all her right, title, and interest in the paper mill and the land whereon the same is built comprising less than twelve acres situate in Dansville in the state of New York, and which belongs to the estate of said Reuben Whiteman.

"Fourth. Upon the acceptance of said deed or deeds by the party of the third part at the time and place above specified, she will, by a proper writing, waive all objections to the allowance upon an accounting of said parties of the first and second parts, as executors of said estate, of the expenditures heretofore and before the 31st day of December, 1889, actually made by them, in the construction, alteration or completion of said paper mill, which expenditures amount to about sixty-five thousand dollars. * * *

"Seventh. A certain agreement in writing bearing even date with this agreement, and simultaneously delivered herewith relating to certain claims and obligations belonging to said estate, shall be deemed to be a part of this agreement, and it and this agreement shall be read together as one instrument."

The agreement last referred to was duly executed by the parties, and the body of it is in the following words: "Now, as a part of said agreement and to be construed and treated as such, and for the considerations mentioned in said agreement, it is agreed that upon the execution and delivery of the deeds to the party of the third part in said agreement bearing even date herewith and their acceptance by the party of the third part as provided in said agreement the parties of the first and second parts as such executors as aforesaid, shall cancel and deliver to said first party individually and he shall be deemed absolutely discharged from all liability to the estate of Reuben Whiteman upon the following notes and obligations, including in-

Digitized by Google

terest thereupon. * * *" Here follows a statement of notes and evidences of indebtedness of Alonzo J. Whiteman to the estate of Reuben Whiteman amounting to $45,594.26. The main agreement was filed for record in the office of the register of deeds of St. Louis county, Minn., on February 4, 1890. After that contract was made, and in August, 1890, the paper mill was destroyed by fire, and the insurance thereon, amounting to about $75,000 was collected by Alonzo. Afterwards, by a quitclaim deed bearing date December 4, 1890, and recorded May 12, 1891, in the office of the register of deeds for St. Louis county, Minn., Alonzo J. Whiteman and Julia N. Whiteman, his wife, and Rebecca E. Whiteman, the widow, conveyed such of the lands referred to in the contract of January 25th as were located in the county of St. Louis, Minn., to Clara J. Whiteman. The deed, after stating who the parties are, proceeds as follows: "Witnesseth: That the said party of the first part in consideration of the sum of one dollar to them in hand paid by the said party of the second part, the receipt whereof is hereby confessed and acknowledged and in consideration and in pursuance of a certain agreement made between the parties hereto and bearing date the 25th day of January, 1890, have bargained, sold, remised and quitclaimed," etc.

On January 2, 1891, after the quitclaim deed had been executed, Alonzo J. Whiteman, individually and as executor of the will of Reuben Whiteman, as party of the first part, and Clara J. Whiteman, as party of the second part, made a supplemental contract whereby, among other things, it was recited and agreed as follows: "Whereas, the parties hereto, together with Rebecca E. Whiteman, did on the 25th day of January, 1890, make and enter into a written agreement, which agreement provided among other things for the conveyance to the party of the second part by the party of the first part, of certain real estate situate in Wisconsin and Minnesota, and the conveyance by the party of the second part of certain real estate situate in the village of Dansville, N. Y., and, whereas, in partial execution of said agreement the party of the second part is about to execute and deliver to the party of the first part a * * * release of all her interest in the insurance moneys collected by the party of the first part from insurance companies on account of policies issued upon the buildings situate upon the real estate aforesaid in Dansville, which buildings were after the making of said agreement, destroyed by fire, and whereas the party of the first part and the said Rebecca Whiteman have executed and are about to deliver to the party of the second part conveyances of a portion of the said lands in Wisconsin and Minnesota, so contracted to be conveyed and are unable to convey certain portions thereof heretofore sold by them. * * * And the party of the second part agrees in consideration of the premises, that in case the covenants and agreements herein contained are faithfully performed by the party of the first part she will not during the life of the said Rebecca E. Whiteman, cause or in any way procure an accounting by the said party of the first part, and the said Rebecca E. Whiteman, in the surrogates court, or in any other court for or on account of their acts and doings as executors of the estate of Reuben Whiteman, deceased."

On January 23, 1892, pursuant to the provisions of the contract of January 25, 1890, requiring the executors as such to make a deed by way of further assurance of title to the land in question to Clara J. Whiteman, such a deed was duly executed and delivered to her by the executors.

After the burning of the mill Alonzo organized a corporation called the Whiteman Pulp & Paper Company, he being the owner of substantially all the capital stock, and on January 9, 1891, took a conveyance to that company from himself and his mother as executors of the land on which the mill had been located, together with the water power, engines, boilers, machinery, and all salvage from the recent fire. The corporation proceeded to repair and reconstruct the mill, and on April 6th and afterwards it borrowed money from the firm of Perkins, Goodwin & Co., of New York, who became its sales agent to dispose of its product. It gave that firm its notes indorsed by Alonzo and Rebecca, and secured their payment by pledge of much of its capital stock and by a chattel mortgage on personal property. It afterwards became financially embarrassed, owing over $100,000. The notes were not paid, Alonzo and Rebecca, the indorsers, were sued, and on March 29, 1892,

Digitized by Google

judgment was rendered against them in the Supreme Court of the state of New York for $10,083.07 in favor of the firm of Perkins, Goodwin & Co. Afterwards suit was instituted in the district court of St. Louis county, Minn., on the New York judgment against Alonzo, and on May 24, 1892, recovery was had against him in the sum of $10,271.90. In January, 1901, execution was sued out on that judgment, levy made on the title and interest of Alonzo in the real estate which had on December 4, 1890, been deeded to his sister Clara, as belonging to him. The same was sold on execution and purchased by complainant, George F. Perkins, who now brings this action to quiet and establish his title by declaring the quitclaim deed of December 4, 1890, and the executors' deed of January 23, 1892, to Clara to have been made to hinder, delay, and defraud the creditors of Alonzo and for that reason to be null and void.

On February 10, 1892, the Surrogate Court of Livingston county made an order on the petition of Clara revoking letters testamentary before that time granted to Rebecca and Alonzo and requiring them to file their final accounts. Hearing on the petition of Clara disclosed the fact that Alonzo had alone taken possession of the personal assets of the estate and, without any intervention or participation by his mother, Rebecca, had administered upon the estate. His complete final account was filed in February, 1895, showing that he owed the estate $227,000, one-half of which belonging to himself and the other to his sister, Clara. This balance consisted of $65,163.31, which Alonzo had improperly expended in improving the mill property which, by agreement between him and Clara, was his; $45,594.26, made up of the worthless claims against him which Clara, by the contract of January 25, 1890, had agreed to discharge; $74,250 insurance money which he had collected and appropriated to his own use and other items of indifferent value. Clara was then made administratrix c. t. a., and an order was made requiring Alonzo to turn over the balance found due from him to the new administratrix. Her final settlement made later discloses the fact that the total amount of all the personal property which ever came to her hands as administratrix was $4,812.57. That probably consisted of some items which she received from other sources than Alonzo. No part of the balance found due from him was ever turned over to the administratrix. Alonzo did not have it, and was hopelessly insolvent. In fact, the balance was substantially composed of worthless claims against Alonzo from whom, by reason of his insolvency, nothing could be collected, and other items, which as between himself and Clara belonged to him, namely, the insurance money and the expenditures upon the mill property. About the time this settlement was made, and on February 12, 1895, Alonzo deeded to Clara in full satisfaction of whatever claim she had against him as executor his interest in certain real estate situated in the counties of Livingston and Steuben, N. Y., the value of which is not shown, and transferred to her the remaining personal property belonging to the estate, which amounted to little or nothing.

From the foregoing detailed statement of the facts the substance may be gathered as follows: That in the adjustment from time to time of their rights in the residuary estate of their father, voluntarily made by Alonzo and Clara, the only parties interested, Alonzo received the deed to the mill property at Dansville, received the money collected from the insurance companies on account of the destruction of the mill by fire, was released from his personal obligation of about $65,000 for money improperly taken from the estate and expended in improving the mill property, and was released from his personal obligation to the estate amounting to $45,000; and Clara got the wild and uncultivated lands in Minnesota and Wisconsin and a deed to some lots of land in Livingston and Steuben counties, N. Y.

Alonzo testified that he was hopelessly insolvent in 1890 and 1892 when the quitclaim and executors' deed were made to Clara; that they were devised and executed without any consideration moving from Clara to him, but solely for the purpose of covering up his property and preventing his creditors from levying upon it in satisfaction of their debts; and that Clara participated and co-operated with him in the accomplishment of his purpose. Clara, on the other hand, explicitly denied that testimony given by Alonzo, and reiterated the statement that the deeds were made pursuant to

Digitized by Google

the contract of January 25, 1890, and in part performance of it. After hearing the evidence the Circuit Court dismissed the bill for want of equity, and the complainant appealed to this court for a reversal of that decree.

After hearing the case on the merits the Circuit Court found that complainant had no right, title, or interest in any of the lands in controversy, but that Clara J. Gibbs had a valid title thereto in fee simple, subject only to the right which she had conveyed to the lumber company, and entered a final decree enjoining complainant from asserting any claim adverse thereto.

Austin N. McGindley, for appellant.

William E. Hale (M. H. Boutelle, on the brief), for appellees.

Before SANBORN, HOOK, and ADAMS, Circuit Judges.

ADAMS, Circuit Judge, after stating the facts, delivered the opinion of the court.

Counsel for the parties in their argument and brief have extended discussion over a vast field of learning in this case; but, after a careful consideration of the facts and applicatory law, we find that the rights of the parties are solvable upon propositions of law which are indisputable and of fact which rest within a narrow compass. Upon the death of their father, and by virtue of the probate of his last will and testament, Alonzo and Clara Whiteman, his children, succeeded to a vested remainder each in and to an undivided one-half of the real estate in question in Minnesota and in and to a certain paper mill and real estate on which the same was situated and other real estate in New York, subject only to a determinable life estate in their mother, Rebecca Whiteman. Her life estate depended upon a condition subsequent that she should not again marry. In Minnesota, as elsewhere, title to real estate does not vest in the personal representatives of a deceased owner, but does on the death of the owner descend to and vest in the heirs at law or devisees subject to the possible requirement of its being needed to satisfy the debts of the deceased. The record in this case discloses no reason for consideration of the rights of creditors of the deceased. Accordingly, in 1890, the land in question was owned as follows: Rebecca had a life estate subject to be defeated by her remarriage, and Alonzo and Clara had each a vested remainder in expectancy in an undivided one-half thereto. Sections 4369, 4371, 4372, 4374, Gen. St. Minn. 1894; Debenture Co. v. Dean, 85 Minn. 473, 477, 89 N. W. 848. Rebecca's life estate was undoubtedly alienable (sections 4164, 4316), but whether so or not is of no importance because it was terminated before this suit was instituted by her remarriage. Alonzo's and Clara's estates were vested in interest, if not in possession, and as such were alienable by them. Sections 4372, 4396, Gen. St. Minn.; Debenture Co. v. Dean, supra; Lawrence v. Bayard, 7 Paige (N. Y.) 70; Griffin v. Shepard, 124 N. Y. 70, 26 N. E. 339; O'Donnell v. Smith, 142 Mass. 505, 8 N. E. 350.

Being so owned and lawfully subject to sale and disposition the only question in this case is one of fact, whether the deed duly and properly executed by Alonzo and Rebecca acting as individuals purporting to convey their right, title, and interest in the land in question to Clara on December 4, 1890, and the deed made by the same par-

Digitized by Google

ties acting as executors in the exercise of powers conferred by the will of the testator conveying the land to Clara on January 23, 1892, were devised and intended by the parties as a scheme to hinder, delay, and defraud the creditors of Alonzo, or were they made pursuant to the provisions of the contract of January 25, 1890, to separate their holdings in common into individual estates.

As the quitclaim deed effectually conveyed all the rights of Alonzo and Rebecca to Clara, little consideration need be given to the subsequent executors' deed, except to say that it evidences a harmonious and persistent purpose to carry out the provisions of the original contract, even to the extent of making a useless deed as an unnecessary assurance of Clara's title just because the grantors had agreed to do so. It shows the good faith of the original agreement.

Complainant, the purchaser of the lands under execution issued on the judgment against Alonzo, contends (1) that Alonzo, when the deeds in question were executed, was in financial straits, embarrassed, and insolvent; that Clara knew of his condition, and voluntarily became a party to a scheme to cover up his property and protect it from the rightful demands of his creditors; that to that end and for that purpose she took and held title to it in secret trust for her brother, with an understanding that, when he should get a settlement with his creditors or otherwise be released from their claims, she would reconvey it to him on demand; and (2) that Clara gave no consideration for the conveyances.

Alonzo was complainant's only witness to the making of the alleged fraudulent compact between him and his sister, and Clara was defendants' only witness on that subject. Alonzo affirmed its existence, and testified that the deeds were executed pursuant thereto. She broadly denied both those propositions. He admitted that the agreement of January 25, 1890, was made for the purpose of dividing the father's estate between himself and his sister, but said nothing was ever done under it. She testified that such was its purpose, and that the conveyances in question to her were made in part performance of that agreement. The testimony of both these witnesses was given about 15 years after the events occurred concerning which they testified. Alonzo was then or soon after, in the New York penitentiary serving a sentence for some crime committed by him, and Clara, while emphatically denying the fraudulent purpose imputed to her, appears to have been quite oblivious to most of the details of the transactions about which she testified. About all she seems to know with any certainty is that she intrusted her matters to competent counsel and followed their directions. From these unreliable sources we confidently turn to those instruments of writing and unimpeachable records which abound in this case for the truth. Both sides concede that the agreement of January 25, 1890, was executed for the purpose of making a friendly partition of the then joint interests of the children in their patrimony. That instrument, so far as we can discover, had no sinister purpose whatsoever. It was a rational and reasonable one to make. It was recorded soon after its execution in the office of the register of deeds where the land in question was situate, as notice to all persons of the incipient

Digitized by Google

rights of the parties. The two deeds now assailed were in apparent partial execution of that agreement. The quitclaim deed recites on its face that it was made "in consideration and in pursuance of a certain agreement made between the parties hereto and bearing date the 25th day of January, 1890." The practically cotemporaneous agreement of January 2, 1891, made between Alonzo and Clara, recites that Alonzo and Rebecca "have executed and are about to deliver to" Clara a conveyance of a portion of the lands in Minnesota and Wisconsin as required by the agreement of January 25, 1890. The executors' deed, as already stated, affords corroboratory proof of the good faith and intentional observance of the requirements of the original agreement obliging the executors on certain conditions therein specified to make, execute, and deliver to Clara "a sufficient executor's deed or deeds for conveying and assuring to her the fee simple title of said lands and premises free from all incumbrances." That deed recites that it was made by the executors "in consideration of the sum of one dollar and other valuable considerations to them duly paid [by Clara] the receipt whereof is hereby acknowledged." In view of such indisputable proof found on the face of the deeds and their allied writing, we have no doubt that the conveyances in question were honestly made for the purpose originally intended by the parties. The testimony of Alonzo that he and his sister deliberately entered into a scheme to cover up and conceal his property from his creditors is out of harmony with the original intention of the parties, and in the light of the fact that Alonzo owed the estate $45,000, had devoted much of the personal estate to unlawful uses, had appropriated and converted to his own use the proceeds of the fire insurance policies on the mill property, and was then hopelessly insolvent, we cannot believe that Clara would have abandoned the original purpose which alone gave her any assurance of securing an equivalent for all or a part of her imperiled interest in the personal estate of her father merely for the purpose of creating a secret trust for the benefit of her brother and to enable him to swindle his creditors. The irrationality and unreasonableness of the story condemn it.

But it is said the conveyances in question were without consideration, and for that reason void as to creditors. The facts do not warrant any such conclusion. When the deeds in question were delivered to Clara, Alonzo had not only then actually received the full agreed consideration, but, according to his own admission, was hopelessly insolvent. By the original agreement of January 25, 1890, he was to get the paper mill in Dansville and the land employed in connection with it, worth according to the brief of complainant's counsel about $150,000. He was also to secure a release and discharge from a personal obligation against him in favor of the estate for about $65,000 occasioned by his appropriating as executor that much of the personal estate for the construction, alteration, and completion of the paper mill. He was also to get a release and discharge from liability for his personal indebtedness to the estate amounting to about $45,000. What did he actually get? The executors of the estate deeded to him the mill property, conveying to him the full legal title, which with the insurance money which he appropriated, amounting to about

Digitized by Google

$75,000, constituted all there was of the mill property. He has never been made to respond to the estate for the amount of $65,000 which he took out of its funds and misapplied in the improvement of his mill. Neither has he ever been made to pay his debt of $45,000 which was admittedly due from him. Such are the facts, and, by whatsoever method, instrument, or conveyance the result was brought about, he is now and for 15 years last past has been in the undisputed and undisturbed enjoyment of all his promised rights and immunities under that agreement. The answer made to this showing is that in 1895 Alonzo, in complying with the order of the Surrogate Court to make a final settlement of his accounts preparatory to turning over his estate to the administratrix c. t. a., charged himself with all the items of money just referred to, and thereby recognized an obligation to the estate for them. That fact for the purposes of this case is of no consequence. As between him and Clara, the items all belonged to him, and he had appropriated them to his own use; but, as between him and the estate, the orderly course of procedure required him to make a full statement of his accounts. It is no uncommon practice in administering the estates of deceased persons for an executor to make partial distribution before final settlement; but that does not excuse a full final statement of accounts with debits against him of the full value of the estate. The fact of a preliminary distribution can afterwards be shown as an exoneration of the executor to that extent. It is also said that Clara never executed a quitclaim deed to Alonzo for the mill property as agreed; but the executors executed that deed with her assent as shown by the proof. It thus appears that the contract of January 25, 1890, has been substantially executed on both sides. Each has received substantially what he or she was entitled to get. Whether it was executed in the exact way specified in the agreement or whether formal instruments were exchanged as thereby contemplated is for the purposes of this case immaterial. We are now dealing with the substance of things, the equities between the parties, and not with technical terms or technical requirements.

On the assumption which we have shown is reasonable, that the deeds in question were made to Clara in partial execution of Alonzo's obligation under the contract of January 25, 1890, a court of equity, if necessary, would undoubtedly have compelled Clara to perform her obligations thereunder. Accordingly, for the purposes of this case, we do not concede that it was necessary to show that Clara has fully performed. The equitable obligation existed, and it was sufficient consideration for the performance by Alonzo of his part of the contract, namely, the execution of the deeds in question. But, as this case involves an issue of fraud and determination of a mental attitude, we have, as we should have done, taken a comprehensive view of all the facts and circumstances surrounding the parties in any way related to the subject under consideration, and in doing so we have found that Alonzo actually received all the money and property to which he was entitled as consideration for the deeds in question, and has never returned and never could lawfully be made to return any portion of it to Clara. From these facts we unhesitat-

Digitized by Google

ingly conclude that the deeds in question are supported by an ample and meritorious consideration. We reach this conclusion in full recognition of the fact largely relied on by complainant's counsel that Alonzo on February 12, 1895, deeded to Clara his interest in some real estate in Livingston and Steuben counties, N. Y., in full settlement of her claims against him as executor as shown by his final settlement. That deed must be taken in connection with all the other facts of the case. It does not appear how much there was in the estate properly belonging to Clara after allowing to Alonzo all that as between him and Clara belonged to him under the agreement of January 25, 1890. That uncertain element might afford full consideration for the last mentioned deed. Neither does it appear how much the real estate last referred to was worth. The conveyance taken seriously and literally may, therefore, be in no wise inconsistent with the conclusion which we have reached. But, when it is considered that by reason of Alonzo's insolvency a technical accounting and settlement as between him and Clara was of no practical importance, we may properly attribute the deed of February 12, 1895, to a disposition to close up in some conclusive way an open account between the parties at a time when enforcement of legal rights would be unproductive of any good.

Counsel for complainant argue that the quitclaim deed was never in fact delivered to Clara, but was held by Alonzo for his own convenience, and placed on record, not by Clara, but by him, to serve his own unlawful purpose of cheating and defrauding his creditors. There is no satisfactory evidence of that character; but, on the other hand, complainant's contention is effectively denied by his own pleadings. In his complaint he avers that the deed was executed and delivered to Clara, "and that said defendant Clara J. Gibbs caused said deed to be recorded in the register of deeds office in and for said St. Louis county, Minnesota, on the 12th day of May, 1891." For the purposes of this case, therefore, we must find and hold as a fact that the deed was duly delivered to Clara before May 12, 1891, and by her for her own purposes caused to be recorded. The judgment under which complainant purchased the lands in question was not rendered until May, 1892, so that it never attached to the land in question as a lien until after Clara's deed was executed and recorded, and her rights established thereunder. Several other facts are argued by counsel as important and significant in the determination of this case. To all of them, in connection with the facts already discussed, we have given diligent consideration which results in a firm conviction that the deeds in question were executed for the honest purpose of making a friendly partition of the real estate of the ancestor, and constituted neither a secret trust in favor of the grantor nor conveyances without consideration. The conclusion reached by us on these questions of fact render unnecessary the consideration of defendants' contention that, even if the deeds were void as to creditors, complainant is barred from relief in equity by his laches in failing to institute this suit for 12 years or more after the alleged fraud was committed.

Digitized by Google

The court below reached the same conclusion we have reached on the issue of fact here involved, and its decree might properly have been a simple dismissal of the bill; but, as its finding that complainant did not have any right, title, or interest in the land in question and its injunctive order restraining him from asserting any such right, title, or interest adverse to the defendants accomplish the purpose and are not complained of for irregularity, the decree as rendered is affirmed.

(153 Fed. 961.)

WILSON v. CALCULAGRAPH CO.

(Circuit Court of Appeals, First Circuit. March 27, 1907. Rehearing Denied May 1, 1907.)

1. EVIDENCE—JUDICIAL NOTICE—RECORDS OF SAME COURT.
   The rule applied that a court is entitled to take judicial notice of its own records, especially where the facts constitute a part of the same litigation.
   [Ed. Note.—For cases in point, see Cent. Dig. vol. 20, Evidence, §§ 62–65.]

2. APPEAL AND ERROR—APPEALABLE ORDER—CONTEMPT PROCEEDING.
   The rule applied that an order of a Circuit Court, adjudging the defendant in a suit for infringement of a patent in contempt for violation of an injunction granted therein, and imposing a fine for the benefit of the complainant, is civil in its nature, and constitutes a part of the proceedings in the case, and, where entered after final decree, is appealable to the Circuit Court of Appeals.

3. SAME—REVIEW—ASSIGNMENT OF ERRORS.
   Held, that the ordinary rules in reference to the limitation after mandate of the powers of a court appealed from do not apply here, because no proposition with reference to them was made in the court appealed from; and consequently the Circuit Court of Appeals declined to revise a proceeding in the Circuit Court with reference to the violation of an interlocutory injunction, which proceeding occurred after the reception of the mandate dismissing the suit.

Appeal from the Circuit Court of the United States for the District of Massachusetts.

Frederick L. Emery (J. Stewart Rusk on the brief), for appellant.
Edwin J. Prindle (Benjamin Phillips, of counsel), for appellee.

Before PUTNAM and LOWELL, Circuit Judges, and ALDRICH, District Judge.

PUTNAM, Circuit Judge. This appeal grew out of a bill in equity, filed by the Calculagraph Company against Wilson, the present appellant, alleging infringement of certain letters patent. On September 26, 1904, the Circuit Court entered in the original case a final decree in favor of the complainant, awarding an injunction and costs. From this decree an appeal was taken to us, with reference to which the citation was signed on November 10, 1904. On February 21, 1906, we entered a judgment as follows:

"The decree of the Circuit Court is reversed, and the case is remanded to that court with directions to dismiss the bill, with costs; and the appellant recovers costs of his appeal."

Digitized by Google

Subsequently, and within the time fixed by our rule 29 (133 Fed. iv, 64 C. C. A. iv), the Calculagraph Company, the then complainant and the present appellee, seasonably filed a petition for rehearing, which it then might do as a matter of right in accordance with our rule and practice. This petition was denied on March 21, 1906, so that then a mandate issued on March 28, 1906. Meanwhile, after the appeal was taken, on February 2, 1905, the Calculagraph Company, the original complainant, filed a petition against Wilson, the original respondent, alleging a violation of the injunction contained in the final decree appealed from by a modified device, and praying for an attachment for contempt. A hearing was had on this petition in the Circuit Court on February 23, 1905, as the result of which an opinion was passed down on March 18, 1905. This opinion declared that Wilson was guilty of contempt, and closed as follows:

"We will not now pass upon the question of penalty, but leave it for a future decree. Let a decree therefore be entered. Defendant adjudged to be in contempt of both the preliminary and the final injunction in this case."

The final order was entered on April 25, 1906, as follows:

Order of Court.

April 25, 1906.

HALE, District Judge. Upon the return of the rule to show cause heretofore entered, and it appearing that service thereof had been had on the defendant, John C. Wilson, by delivering a copy thereof to the said John C. Wilson, and counsel having been heard in his behalf, the court finds that defendant is in contempt both of the preliminary and the perpetual injunction issued by this court in the case of Calculagraph Company v. Wilson, in equity, No. 1,749, and orders that the said defendant pay one hundred dollars fine and the costs of these proceedings, said costs being one hundred forty-five and $^{74}/_{100}$ dollars, said fine and costs to be paid into court for the use of the petitioner, the money to be paid within ten days, or defendant to be then committed until this order is obeyed.

By the Court: Benj. H. Bradlee, Deputy Clerk.

Thereupon Wilson appealed to us.

It will be noticed that the hearing on the petition for an attachment the preliminary order, and the final order, were all after the judgment was entered in the Court of Appeals, and the final order was also after the mandate issued.

The essential details with reference to the foregoing proceedings to not appear in the record before us, were not referred to in the assignment of errors, and have not been given in the briefs of the parties. They have been found after personal investigation by the court and an examination of the voluminous record on appeal in the original suit. We have no doubt that we are entitled to take judicial notice of our own records, especially where the facts constitute a part of the same litigation. Cushman Co. v. Goddard, 95 Fed. Rep. 664, 665, 37 C. C. A. 221, and authorities there cited. This reference is to our own opinion passed down on June 18, 1899, and it sufficiently states the rule without regard to later decisions in which the same rule has been stated.

In Re Jugiro, 140 U. S. 291, 11 Sup. Ct. 770, 35 L. Ed. 510, it is said generally, at pages 295 and 296 of 140 U. S., pages 771 and 772 of 11 Sup. Ct. (35 L. Ed. 510), that a judgment of the Supreme Court confirming the judgment of the court below is effective from the time

Digitized by Google

of its entry, so that the court below could proceed without awaiting the issue of a mandate. In Burget v. Robinson, 123 Fed. 262, 265, 59 C. C. A. 260, decided by us on May 1, 1903, we queried whether that determination should not be regarded as peculiar to appeals under the habeas corpus act, which was the subject-matter under consideration, and whether ordinarily, in theory of law, the record is not supposed to remain in the appellate tribunal until there has been a remittitur in some form; so that perhaps it is not yet settled whether even the preliminary order of the Circuit Court in the proceeding before us occurred before or after the judgment of this court was perfected. Also, there is a question whether or not that preliminary order was effectual to any extent aside from the formal order entered on April 25, 1906. Also, under equity rule 93, which under the statute establishing this court is, at least until this time, our rule, and which only puts in form the law to the same effect as stated in Leonard v. Ozark Land Company, 115 U. S. 465, 468, 6 Sup. Ct. 127, 29 L. Ed. 445, there may be a question whether we should unqualifiedly apply to injunctions granted by the Circuit Court the quite peremptory decisions of the Supreme Court that, after a judgment of an appellate tribunal, the court below has no power to proceed except to execute the mandate which it receives. In re Gamewell Co., 73 Fed. 908, 910, 20 C. C. A. 111, decided by us on April 23, 1896.

It is evident that the proceeding of the Circuit Court now appealed against was civil in its nature, and not criminal, as explained in Bessette v. W. B. Conkey Company, 194 U. S. 324, 24 Sup. Ct. 665, 48 L. Ed. 997, in Re Christensen, 194 U. S. 458, 24 Sup. Ct. 729, 48 L. Ed. 1072, and lately in Doyle v. London Guarantee Company, 204 U. S. 599, 27 Sup. Ct. 313, 51 L. Ed. 641, in which an opinion was passed down in the Supreme Court on February 25, 1907. If it had been criminal in its nature, it would, of course have been in law a separate proceeding, and not affected by our judgment in the original case. Being of a civil character, however, and whether to be regarded as interlocutory or as on the heel of the judgment of the Court of Appeals in the original case, it might be appealed against under the broad provisions of the statute establishing this tribunal. The appellee here—that is, the Calculagraph Company—has moved to dismiss this appeal on the ground that we lack jurisdiction over the same; but that it is in error with a proceeding of this character is so clear that we need not pursue this topic further.

Wilson, the appellant here, urges on us that, under the circumstances, the Circuit Court had no power except to give effect to the mandate, and that it therefore exceeded its authority in imposing a fine as it did. We have pointed out that not only does the record laid before us fail to show on its face the facts necessary to properly understand this proposition, but that no reference is made to it in any specific form by the assignment of errors. The record also fails wholly to show that this point was brought at all to the attention of the court below. We are unable to find that, aside from this, any proposition was argued before us by the present appellant, except to the effect that the fine imposed was excessive because the violation of the injunction was purely technical, and that the decision of the Court of Appeals, in reversing

Digitized by Google

the judgment of the Circuit Court in the original cause, deprived the whole proceeding of any foundation; but the totality of the assignment of errors on the present appeal was as follows:

"And now comes the defendant and claims an appeal in this cause, and assigns therefor the following errors, viz.:

"First. That the court erred in respect to the law and facts in the case in finding defendant in contempt of court.

"Second. That the court erred in ordering defendant to pay the sum of two hundred and forty-five and twenty-four hundredths (245.24) dollars, said sum comprising the sum of one hundred (100) dollars as a fine, and one hundred and forty-five and twenty-four hundredths (145.24) dollars, the amount of court costs to complainant of the proceedings in contempt, said sum of two hundred and forty-five and twenty-four hundreths (245.24) dollars to be paid for the benefit of the complainant.

"Third. That the court erred in ordering defendant to pay the sum of two hundred and forty-five and twenty-four hundreths (245.24) dollars for being in contempt of court."

The present appellee, the Calculagraph Company, has not discussed the effect of the judgment of the Court of Appeals and its mandate on the proceedings in the Circuit Court. We are not surprised at this by reason of the facts we have stated, namely, that the assignment of errors in no way called its attention thereto, and that the record in no way indicates that the topic was laid before the Circuit Court. The effect of the insufficiency of the assignment of errors in this particular is apparently of substantial consequence. Also, the record presents no facts which would enable the court to pass understandingly on the second assignment. It it true that there are, perhaps, some cases where all that the appealing party can do is to assign generally that the judgment or the decree below was erroneous, especially where it covers both fact and law; but here it was clearly within the power of the appellant to point out whether he relied on a claim that there was no infringement by the new device, or on a claim that the judgment and mandate of the Court of Appeals deprived the Circuit Court from entering the preliminary order of March 18th, or from entering the formal order of April 26th, or whether he claimed that the order of April 26th was something more than merely putting into form the preliminary order of March 18th, or that the judgment of the Court of Appeals was conclusive in his favor on the entire merits of the present litigation.

The amount involved here is comparatively small, and no gross injustice can be done by holding the present appellant to a reasonable compliance with our practice. Were it otherwise with reference to either the one or the other, we might be justified in noticing some of the questions now presented by the appellant, Wilson, although not properly assigned, or in permitting amendments of the assignment of errors and a reargument; but, under the circumstances, we feel that this is an instance where we may properly protect ourselves by an enforcement of our rules.

The decree of the Circuit Court is affirmed, and the appellee recovers its costs of appeal.

Digitized by Google

(153 Fed. 969.)

UNITED STATES v. TIFFANY & CO.

(Circuit Court of Appeals, Second Circuit. February 4, 1907.)

No. 22.

CUSTOMS DUTIES—COURTS—ACTION FOR DUTIES—SUSPENSION OF TRIAL.

In an action against an importer for unpaid duties, the Circuit Court has ample power to suspend the trial until the importer, by payment of the duties assessed, may put himself in position to try the question as to classification of the goods before the Board of General Appraisers.

In Error to the Circuit Court of the United States for the Southern District of New York.

For former proceedings in this case, see 81 C. C. A. 11, 151 Fed. 473, reversing (C. C.) 137 Fed. 971, as to an importation at the port of New York.

It was there held that, when an importer is sued for unpaid duties, he cannot defend on the ground that the duties were improperly assessed; that under Customs Administrative Act June 10, 1890, c. 407, § 14, 26 Stat. 137 [U. S. Comp. St. 1901, p. 1933], the collector's decision is final, unless reversed on review by the Board of United States General Appraisers or the courts in the manner prescribed in said act, and that in order to secure such review the duties should first be paid. The present proceedings have arisen on a motion in behalf of the importers for leave to apply to the Circuit Court for permission to amend the answer to the complaint of the government in the original action.

D. Macon Webster (Arthur M. King, of counsel), for importers.

J. Osgood Nichols, Asst. U. S. Atty.

Before WALLACE, LACOMBE, and COXE, Circuit Judges.

LACOMBE, Circuit Judge. The application to serve and file a supplemental and amended answer is denied, because we deem the application unnecessary, as the Circuit Court has ample power to grant such relief, and to suspend the trial until the importer, by payment of the duties assessed, may put itself in position to try the question as to classification before the Board of General Appraisers.

(153 Fed. 967.)

McNABOE v. COLUMBIAN MFG. CO.

(Circuit Court of Appeals, Second Circuit. May 31, 1907.)

BANKRUPTCY—PREFERENCE—STOLEN FUNDS.

The president of a bankrupt corporation, being the Eastern agent of defendant corporation, with knowledge of the bankrupt's insolvency on several occasions, misapplied funds belonging to defendant to the use of the bankrupt without defendant's knowledge or consent, and then, when the bankrupt's failure could no longer be suspended, he sold certain of the bankrupt's assets, and with the proceeds repaid defendant the money misappropriated, also without defendant's knowledge. *Held*, that the repayment of the money so stolen from defendant did not constitute a preference recoverable by the bankrupt's trustee.

In Error to the Circuit Court of the United States for the Southern District of New York.

Digitized by Google

The following is the opinion of Hough, District Judge, in the court below:

The legal question here to be decided offers as a basis for adjudication very few and simple facts.

Within four months of the petition filed against the bankrupt herein the same man was at the same time the president of the bankrupt corporation, and an agent and director of an entirely different corporation. The bankrupt being already insolvent, this person on several occasions applied the funds of the corporation for which he was agent to the uses and purposes of the bankrupt, passing such funds through the bankrupt's bank account. Neither as agent nor director had he any authority to do what he did, and what he did do amounted in plain language to theft. The money under his control was in New York, and the headquarters of the corporation for which he was agent were in St. Louis, where also all its officers resided or had their place of business. When this man realized that bankruptcy of the corporation of which he was president was inevitable, he converted into cash a considerable portion of the bankrupt's assets, and repaid to himself as agent for the St. Louis corporation the amount which he had practically stolen. None of the officers of the defendant (the St. Louis corporation) had the slightest knowledge that their New York funds had either been taken or replaced until months after the bankruptcy was flagrant. The trustee in bankruptcy now asserts that the repayment of the stolen money constitutes a voidable preference under secion 60 of the bankruptcy act (Act July 1, 1898, c. 541, 30 Stat. 562 [U. S. Comp. St. 1901, p. 3445]).

It is admitted that, in order to constitute a voidable preference, either (a) the person receiving the preference; or (b) the person to be benefited by the preference, or (c) "his agent acting therein" shall have had reasonable cause to believe that a preference was intended by the payment or transfer complained of. Assuming that the performance above outlined comes within the purview of the bankruptcy act at all, it must be admitted that neither "the person receiving" the payment in question, nor the person "to be benefited thereby," had, or had reasonable cause to have, the guilty knowledge which is the basis of a voidable preference.

This whole claim rests upon the proposition that the man who took the money from the defendant was the agent of the defendant in respect of the repayment, and that, inasmuch as the payment constituted a preference under section 60a, the words "his agent acting therein" bring the matter within the prohibition of section 60b. It is candidly admitted in the able argument for the plaintiff that the rule which charges the principal with his agent's knowledge is subject to exception in cases where the agent is acting in fraud of his principal in the very transaction wherein he has knowledge or gets notice. As was said in De Kay v. Hackensack Water Co., 38 N. J. Eq. 161: "Where an officer of a corporation deals with the corporation in a matter in which his interest is opposed to the interest of the corporation, he does not in such transaction represent the corporation so as to make his knowledge the knowledge of the corporation." It is not, of course, argued that the person out of whose wrongdoing this claim arose was the agent of the defendant in permitting its money to flow into the coffers of the bankrupt; but it is strenuously urged that, when it came to repaying that money (by such repayment probably saving himself from criminal prosecution), the same man became once more the defendant's agent. But the whole transaction, including payment and repayment, was something of which the defendant had no knowledge whatsoever, and as to which the law expressly repudiates any imputation to the corporation of a dishonest director's knowledge. It does not appear to me to be possible for a person to be not the agent of a corporation in a swindle on that corporation, and to be the agent of the same corporation in effecting reparation thereof, when both swindle and reparation remain entirely unknown to the corporation affected. If this case had arisen under the act of 1867, it cannot I think be doubted that Lindsey v. Lambert Building Association (D. C.) 4 Fed. 48, would have required judgment for the defendant. The reasoning of that case is entirely satisfactory to me, and I fail to perceive that the

Digitized by Google

words of the present statute "or his agent acting therein" require a different decision.

In order to make those words applicable, the person whose knowledge is to be imputed to the defendant must be (a) an agent, and (b) he must be an agent authorized or empowered to act in respect of the preference, and (c) he must actually perform the duties of his agency in respect of the preference. How a man can have an agent empowered to act in a matter which could never arise without the commission of a flagrant moral wrong (if not a technical crime) by the alleged agent I cannot perceive; and to presume that a person appoints an embezzler to recover the amount embezzled is, I think, an application of the maxim regarding "setting a thief to catch a thief," which exposes the law to ridicule. The cases of Nisbit v. Macon B & T Co. (C. C.) 12 Fed. 686, and Crooks v. People's National Bank, 72 App. Div. 331, 76 N. Y. Supp. 92, 495 (affirmed 177 N. Y. 68, 69 N. E. 228), do not appear to me to affect this case. They both lack that element of secret dishonesty on the part of the person sought to be treated as an agent, which is, I think, the ruling consideration here.

I regard this case as suitable for the consideration of the appellate court, and have thought it sufficient, therefore, to indicate briefly the reasons which lead me to direct judgment for the defendant.

William S. Maddox, for plaintiff in error.

Charles E. Hill, for defendant in error.

Before LACOMBE, TOWNSEND, and COXE, Circuit Judges.

PER CURIAM. In brief, the question presented for decision is whether a party who has had stolen money restored to him, he being in entire ignorance both of the theft and the restoration, has received a preference under the bankruptcy act?

We are so clearly of the opinion that he has not received a preference that we find it unnecessary to add anything to the discussion of the proposition found in the opinion of the judge of the Circuit Court.

The judgment is affirmed.

Digitized by Google

(153 Fed. 740.)

HOUGHTON v. WHITIN MACHINE WORKS.

(Circuit Court of Appeals, First Circuit. February 12, 1907.)

No. 638.

1. PATENTS—REISSUE—INVENTION—THREAD-GUIDES FOR SPINNING MACHINES.
The Houghton reissued patent, No. 12,263 (original No. 753,577), for an improved thread-guide for spinning or twisting machines, was applied for within about four months after the granting of the original patent, which was within a reasonable time, and, in view of the broadened claims which were necessary to cover the actual invention, was a proper reissue. The improvement of the patent, which consists in substituting, for the wooden finger-heads of the prior art, heads made of metal accurately hinged and properly adjusted to a vertical metal strip secured to the face of a doffing-rail, making it possible to change the thread-guide from soft to hard wire, permitting an accurate adjustment of metal parts at the outset, and under such conditions as to secure continued accuracy of position in operation, constitutes a positive advance in the practical art of cotton spinning and twisting, and discloses invention of such character as to relieve the patent in a measure from the operation of the narrow rules of construction which apply to improvement patents that only slightly advance the art. Claims 1, 2, 3, and 4, also, *held* infringed.

2. SAME—INVENTION—SUBSTITUTION OF MATERIALS.
While the mere substitution of one material for another in a structure does not constitute invention, it is something to be considered on that issue, where it makes possible changes in other elements of a combination to produce improved operation.

[Ed. Note.—For cases in point, see Cent. Dig. vol. 38, Patents, § 23.]

Appeal from the Circuit Court of the United States for the District of Massachusetts.

William K. Richardson and Louis W. Southgate, for appellant.
William A. Jenner, for appellee.

Before COLT and PUTNAM, Circuit Judges, and ALDRICH, District Judge.

ALDRICH, District Judge. The patent in suit relates to cotton manufacturing, and the invention in question is for an improved thread-guide for spinning or twisting machines, and for an improved form of thread-guide support. It is a reissue patent, granted August 23, 1904, and numbered 12,263. The original patent was granted March 1, 1904, and numbered 753,577, and the application for reissue was filed July 16, 1904, about 4½ months after the original patent was granted.

Claim 4 of the reissue patent is precisely like claim 1 of the original patent of March 1, 1904. The proofs are only directed against the defendant as infringing claims 1, 2, 3, and 4 of the reissue patent. There is no substantial controversy about infringement so far as it relates to claims 1, 2, and 3; but infringement of claim 4 was disputed.

The reissue patent was attacked both upon the ground that it was invalid as a reissue, and upon the ground that its first four claims in suit did not involve invention.

We will first consider the question whether the reissue patent in suit involves invention.

We think it does.

Digitized by Google

Though the patent in its adaptation of parts involves the original and novel idea of a sheet-metal strip to which the finger-heads are attached, it is, after all, in substance and in its general effect, a patent for an improved combination of old elements in a mechanical arrangement which at once advances the art in a new direction. What the adaptation does in practical operation upon widely used machines in cotton spinning and twisting, old and new machines alike, as compared with the older adaptations, goes far towards demonstrating the fact of invention. Though the patent is for an improved thread-guide and an improved thread-guide support, rather than for a new and original discovery, its practical success is such as to entitle it to favorable consideration, and to relieve it in a measure from the operation of the narrow rules of construction which ordinarily apply to patents for improvements which only slightly advance the art, and accomplish only unimportant and inconsiderable results.

In the older art, the adaptation of construction can hardly be said to have approached the combination in question in simplicity and necessary accuracy of position of parts in operation. The following is a fair illustration of the old construction in common use:

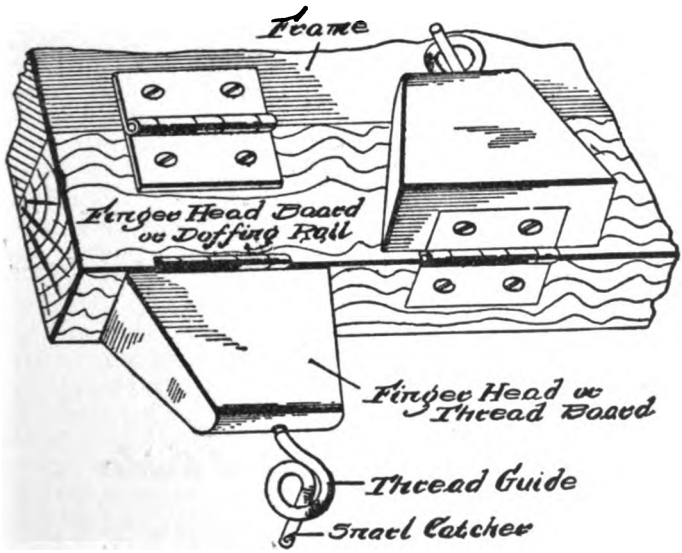

It will be seen that, among the old constructions in use, there was a finger-head board or doffing-rail, which was hinged to the framework of the machine. To this individual blocks of wood, or thread-board supports for the thread-guide, were hinged, and into the projecting face of the finger-head, or block, a metal thread-guide was screw-threaded and adjusted to guide the thread. In practical operation, precision of position with respect to the axis of the spindle is necessary. The requirements of accuracy of adjustment in this respect are so arbitrary as to put out of question the use of hardened or rigid wire bent into pigtails as thread-guides, both in the process of original adjustment and in the process of readjustment when the same get out of position in operation. This is so because, when the

Digitized by Google

thread-guide is screwed into the finger-head, it is found not to be in the necessary exact adjustment for properly guiding the thread, and so must be bent in order to bring the eye of the guide in proper relation with the axis of the spindle; and, in practical operation, the guide gets out of position, and must be bent or turned back in order to properly do its work. This being so, soft or relatively flexible wire, as distinguished from spring-tempered wire, was used, in order that it might be restored to its position of usefulness by bending or hammering, or by hand manipulation.

Moreover, in the old constructions in practical use, the finger-heads which carry the thread-guides are in large numbers individually attached directly to the doffing-rail by a hinge and screws.

The cut which follows represents well enough one of the old type with the thread-guide screwed into a wooden finger-head, and the

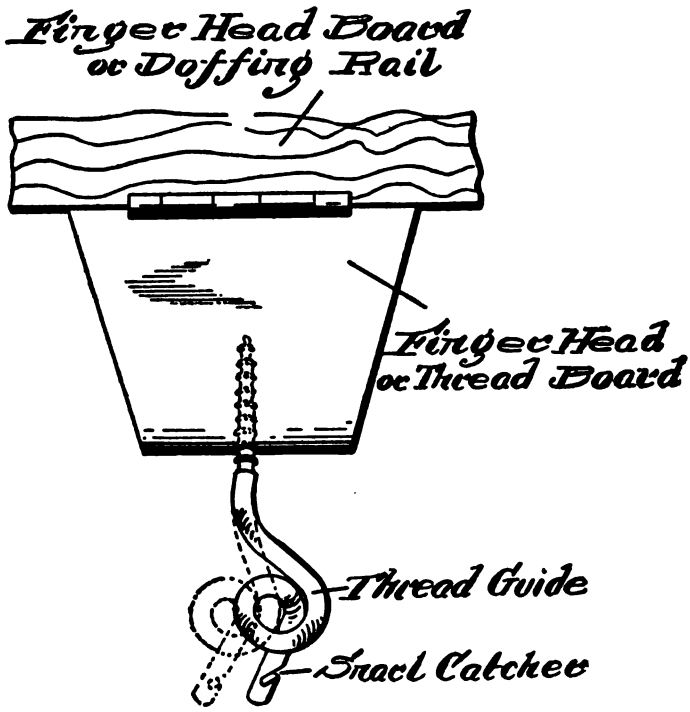

thread-guide is represented by this cut as having been out of position, and as having been brought into position again by bending or other manipulation.

It would seem clear enough that upon cotton spinning and twisting machines carrying a large number of spindles, from which each thread under high speed must be accurately guided, greater security and precision than anything disclosed in the mechanisms of the older art was a thing needed in the work of spinning and twisting, and that industrial conditions required that, in the particular detail of guiding the thread from the spindle, the situation should be relieved from the clumsy and

Digitized by Google

unsatisfactory conditions existing in this respect at the time Houghton took out his patent.

Now as to the Houghton invention in suit. The claims in issue are as follows:

"1. In a spinning or twisting machine, the combination of a sheet-metal strip having places stamped therein for setting finger-heads, with the finger-heads hinged to said strip so that the thread-guides of the finger-heads will be in proper position when the strip is fastened in place in the machine.

"2. In a spinning or twisting machine, the combination of a rail or supporting-board with a vertical sheet-metal strip secured to the front face thereof, said sheet-metal strip having places stamped therein for setting the finger-heads, and with the finger-heads hinged to the sheet-metal strip and extending horizontally therefrom.

"3. In a thread-guide support for spinning or twisting machines, the combination of a rail or supporting piece, and a plurality of sheet-metal finger-heads, each formed from a piece of sheet metal bent to form a top plate, and bent-down portions which engage the vertical face of the rail or supporting-piece forming stops for holding the finger-heads in horizontal position.

"4. In a thread-guide support for spinning or twisting machines, the combination of a sheet-metal strip and a plurality of sheet-metal finger-heads, each formed from a piece of sheet metal bent to form a top plate, side flanges which act as stops for holding the fingerheads in horizontal position, and integrally bent or turned tongues which intermesh with bent or turned tongues extending from the sheet-metal strip to form hinged joints."

In the older practical constructions in use, we had the necessary wooden finger-heads and the necessary soft metal thread-guides with the inherent defects of insecurity of such appliances in respect to accuracy of continued adjustment. This situation was at once relieved by Houghton, because he made it possible to change the thread-guide from soft to hard wire, and the finger-heads from wood to metal securely hinged and properly adjusted to a vertical strip firmly secured to the vertical face of a doffing-rail. Houghton's adaptation thus relieved the situation from the necessity of using wooden finger-heads and soft metal guides, and permitted an accurate adjustment of metal parts at the outset, and under such conditions as to secure continued accuracy of position in operation. This, we think, constituted a very positive advance in the practical art of cotton spinning and twisting.

Quite likely the substitution alone of one material for another would not amount to invention, but the successful adaptation of the metal finger-head which made the use of highly tempered thread-guides possible is something to be considered in connection with the other elements of the combination upon the question as to whether what he did amounted to invention.

In a practical view, what the textile industry required was an accurate and reliable thread-guide which could be applied to old machines as well as new. It required something that could not only be placed in accurate relation to the machine and the spindle, but something which would remain permanently in proper relative position. Otherwise it would not reliably perform the necessary function of guiding the thread. The importance of such requirement is at once seen when it is realized that each machine in practical operation carries a large number of spindles which require some measure of personal oversight, and that the necessary personal oversight is minimized, and the work of the machine is augmented in degree according as any device for properly

Digitized by Google

guiding the thread becomes susceptible of accurate and permanent lateral and horizontal adjustment.

The leading features of the Houghton adaptation of mechanical parts can be most conveniently seen through the use of a cut illustrative of his device. For this purpose we employ, what is in substance, Fig. 1 of his reissue patent, supplemented by certain lines and words by way of description

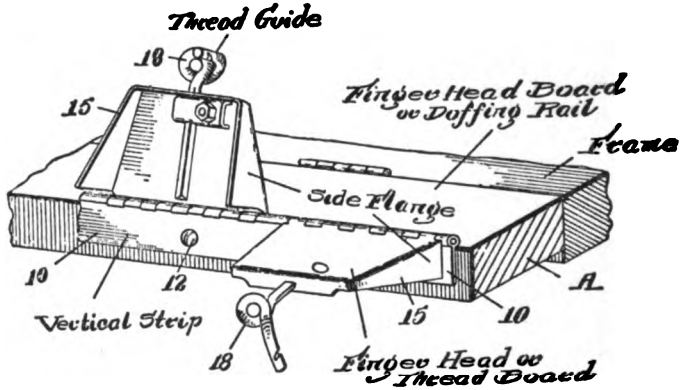

In this illustration we have one finger-head and the thread-guide in position, for doing its work, and another thrown out of working position, as is the case when necessary to splice the thread.

The metal vertical strip which has been spoken of as a new element in the combination is indicated by figures 10, and is something upon which a plurality of finger-heads are ingeniously spaced, gauged, and hinged in such numbers as are required. The strip when cut in proper length for a particular machine is attached to the vertical face of the finger-head board or doffing-rail by a series of screws, like 12 of the cut. This strip thus performs the function of furnishing suitable intermediate means for properly locating the finger-heads and of connecting the metal of the entire thread-guiding mechanism to the framework of the machine, and it also at once becomes a certain and fixed support to the finger-heads, because, when their side flanges abut against it, it becomes the means of accurately and permanently holding them in the necessary horizontal position.

Unquestionably, the success of Houghton's adaptation is in a large measure attributable to the relation which the new vertical strip sustains to the machine and the metal parts between that and the spindle. But, notwithstanding the fact that the vertical strip is new in its relation, and is something which in its setting performs useful and important functions, the invention, after all, resides, in a broader sense, in the conception of the combination, and in the exceedingly practical and meritorious adaptation of the various metal parts in a complete mechanical appliance capable of doing the work and of successfully meeting the requirements of an existing necessity.

In a very considerable sense, and from the very nature of things, every patent, so far as the fact of invention is concerned, is to stand, if it stands at all, upon its own inherent merit, and therefore a given situation is not much aided by authorities otherwise than by the rela-

Digitized by Google

tive measure of merit ascertained under somewhat unsatisfactory methods of comparison; but, if the ingenious barbed-wire twist, which "turned a failure into a success," was invention, surely what Houghton accomplished through a successful substitution of metal parts for wood and by way of an ingenious adaptation of hard-tempered wire and sheet metal parts, so assembled as to be easily adjustable to old and new machines alike, ought to be accepted as invention.

In the older type of construction, as will be seen by the first cut which we have used, the wooden finger-head was individually attached to the doffing-rail by a hinge and screws. Such attachment was so unreliable that it was necessary, as has been said, to employ a soft and flexible wire as the thread-guide, in order that it might be readjusted in necessary position as occasion required.

As pointed out, exactness, both in horizontal and in lateral or sidewise position, was something not only important but indispensable. In order to secure these results, Houghton describes finger-heads to be made from sheet-metal, to be hinged to a single vertical strip, the finger-heads having side flanges so bent and shaped as to engage the vertical strip, and thus secure and permanently hold themselves in the necessary horizontal position. Such security of horizontal position enabled him to use thread-guides made of hard-tempered wire, so attached to and carried in the finger-heads as to be susceptible of sidewise adjustment, and of being securely and permanently fixed in proper position with reference to the spindle. The connection between the finger-heads and the metal strip is secured by means of tongues or fingers extending from their rear edge, which intermesh with tongues or fingers extending from the upper edge of the vertical strip, the respective fingers and tongues coiling upon a hinge-pin extending the length of the strip, thus making a hinged connection between several finger-heads and a single metal strip easily adjustable to the vertical part of a given doffing-rail under such conditions as to enable the entire number of thread-guides to be thrown out of operation by an upward throw of the doffing-rail, or given thread-guides to be singly thrown out of operation if the exigency requires this only. While the hinge attachment to the metal strip is old, and in itself alone does not involve invention, in view of its peculiar setting it is something, we think, to be considered in connection with the various other parts with which it is associated in use in the mechanical adaptation as a whole.

As to the prior art, it is sufficient to say that it falls far short of anticipating Houghton's conception and efficient adaptation, or of accomplishing anything like the satisfactory commercial results reached through what Houghton described.

Next, as to the disclaimer. There was still another patent, to which we have not referred. It is numbered 677,988, and was granted to Houghton in 1901. Considerable importance has been attached to this, and it is something to be considered, because the reissue patent refers to it and makes a certain disclaimer. Both the patent of March, 1904, and the reissue of August, 1904, in fact, refer to the 1901 patent as something to be perfected and improved in construction. It is important to note that the sheet-metal strip described in the patent of 1901, to which the finger-heads were connected, was a finger-head board,

Digitized by Google

not an intermediate vertical strip, and the idea was to apply it to the top horizontal surface of the doffing-rail, and the mechanical arrangement in detail under that patent was quite different from the adaptations described in the reissue patent in question. It would seem that the Circuit Court acted upon the idea that the intended improvement of the reissue patent of 1904 had reference to tempering the thread-guide and to its adjustment in the finger-head. We think more than that was intended, and that the adaptation of parts in the patent in suit, which we have already described, was an essential and substantial improvement upon the patent of 1901. We also think that a reasonable construction of the disclaimer only carries the idea that Houghton intended to disclaim the subject-matter of the particular combination emphasized by the patent of 1901, which was a direct combination and attachment of a sheet-metal strip or finger-head board and a finger-head made with prolonged side flanges extending under and beyond the hinge for the purpose of horizontal support.

Now, as to the reissue: The somewhat recent case of Topliff v. Topliff, 145 U. S. 56, 12 Sup. Ct. 825, 36 L. Ed. 658, after summarizing the authorities, lays down certain rules as settled by the Supreme Court, and, among other things, it is there stated that the power to reissue may be exercised when the patent is inoperative, because the claims were narrower than the actual invention, provided the error arose from inadvertence or mistake. The right, however, is subject to certain limitations, and among them that the reissue shall be for the same invention, as it appears from the specification and claims, and that there must be reasonable diligence in moving. It is also stated as something to be regarded as settled by the Supreme Court that the court will not review the decision of the Commissioner of Patents upon the question of inadvertence, accident, or mistake, unless the matter is manifest from the record.

Mr. Houghton moved promptly for reissue upon discovery of what seemed to be a limitation of his new patent to the interlocking hinge, because he had the finger-heads interlocked with the thread-board in his 1901 patent. He set out in the oath appended to his application for reissue that the patent was inoperative for the reason that the specification was defective and insufficient, and that the defect and insufficiency resulted from an omission to claim the sheet-metal strip except in combination with a particular form of hinge, and that it arose from inadvertence. In view of the scope of the specification of the March 1904 patent and the limitation upon its claims, and in view of the broadened character of claims 1, 2, and 3 of the reissue, it would seem a proper case for reissue, provided there was due diligence on the part of the patentee. The application was made in a little over four months, which ordinarily would be accepted as not an unreasonable time, provided public rights have not intervened. We do not see anything in this case which should be accepted as a controlling intervention of public, or third party rights, or anything which calls for a harsh rule in respect to a time limit. In view of the whole situation, we think we should treat the reissue as seasonably applied for, and as something granted upon a proper showing of mistake, resulting from

Digitized by Google

inadvertence in not giving proper breadth to the claims. The specification of the original patent, when read in connection with the cuts, manifestly shows that the patentee intended a broader invention than that stated in his claims; and what was stated as his invention in his specification was saved to him by the broadened claims 1, 2, and 3 of the reissue, and rightly so, we think.

With claims 1, 2, and 3 of the reissue comes claim 4 of the original patent, which gives prominence to the idea of intermeshing tongues and is verbatim with claim 1 of the original, and must have the same status as a claim that it had in the original patent. Gage v. Herring, 107 U. S. 640, 2 Sup. Ct. 819, 27 L. Ed. 601.

In conclusion, as to infringement: It is not seriously contended, even if denied, that claims 1, 2, and 3 are not infringed; and as to claim 4, the defendant's leading expert, Mr. Livermore, states that the defendant's construction, broadly considered as a hinge, is an equivalent, or mechanical substitute, for the construction shown in Houghton's claim 4 of the reissue. This, in connection with an examination of the various parts and their function as used in the defendant's construction, and the other evidence in the case, satisfies us that the complainant establishes that the defendant used the Houghton idea, and that there was infringement in respect to claim 4, as well as to claims 1, 2, and 3.

The decree of the Circuit Court is reversed; the case is remanded to that court, with directions to enter a decree for the complainant on claims 1, 2, 3, and 4 of the reissued letters patent, No. 12,263, in suit; and the appellant recovers his costs of appeal.

(154 Fed. 13.)

GLOBE & RUTGERS FIRE INS. CO. OF NEW YORK v. DAVID MOFFAT CO.

(Circuit Court of Appeals, Second Circuit. April 30, 1907.)

No. 32.

1. INSURANCE—POLICY—DELIVERY IN SISTER STATE.

Where a fire policy insuring property in Virginia was executed, accepted, and delivered in New York by a company not authorized to do business in Virginia and having no agent there, it was not affected by Va. Code 1904, p. 630, § 1296a, providing that fire insurance companies not incorporated by the laws of the state, but legally authorized to do business therein, shall not make contracts of insurance on property in Virginia, save through regularly constituted agents residing within the state.[1]

2. SAME—POLICY—CONSTRUCTION.

Where insured prepared an elaborate rider describing the property intended to be covered, which was attached to the policy, such rider should not be expanded as against the insurer beyond its plain and ordinary

[1] See note at end of case.

Digitized by Google

meaning, on the theory that the policy should be interpreted against the insurer.

[Ed. Note.—For cases in point, see Cent. Dig. vol. 28, Insurance, § 295.]

3. SAME—PROPERTY COVERED.

Plaintiff tanning company prepared an elaborate rider to be attached to its insurance policies, attempting to specify every species of property for which insurance was desired on plaintiff's premises, which rider referred to a plan of the premises on file in the office of plaintiff's insurance broker. The rider attached to the policy in question provided no insurance on "bark ground and unground" contained in the building marked "3" on the plan, nor on bark and liquors in the leach house and coolers marked "2" on the plan, or on bark and liquors contained in a leach house marked "16," nor on the bark sheds on the tannery premises marked "8" on the plan, but $10,000 on "bark in piles and under sheds on the tannery premises marked 8 on the plan." *Held*, that the policy should be construed to include bark in piles on that part of the tannery premises marked "8," and did not include a bark pile in a square plot on the premises not so marked, but in proximity to a bark shed.

4. SAME—CONSTRUCTION—WHAT LAW GOVERNS.

Where a New York insurance policy was issued on property located in Virginia, and provided that it should expire "at noon" on a certain day, the contract, being performable in Virginia, was not governed by Laws N. Y. 1892, p. 1491, c. 677, § 28, providing that an act required to be performed within a specified time should be performed according to standard time.

5. CUSTOMS AND USAGES—INTERPRETATION OF CONTRACT—EVIDENCE.

Where a New York fire policy, providing that it should expire at noon on a specified day, was performable in Virginia, parol evidence was admissible to show the custom of the place where the property was insured for the purpose of determining whether the parties intended the time to be governed by standard or solar time.

In Error to the Circuit Court of the United States for the Southern District of New York.

This cause comes here upon writ of error to review a judgment of the Circuit Court, Southern District of New York, entered upon a verdict in favor of the defendant in error, who was plaintiff below, in an action to recover a loss by fire under a policy of insurance.

F. R. Coudert, John P. Murray, and Coudert Bros., for plaintiff in error.

T. L. Frothingham, Edward M. Shepard, and Steele, De Friese & Frothingham, for defendant in error.

Before WALLACE, LACOMBE, and TOWNSEND, Circuit Judges.

LACOMBE, Circuit Judge. Plaintiff owned a tannery plant, comprising several buildings with open spaces between and around them, located at Iron Gate, Va. It took a policy of insurance in the amount of $10,000 from the defendant, covering none of the buildings, but only bark in piles and under sheds. The policy was for one year, expiring at noon of January 8, 1902. Some time between 11:20 and 11:30 a. m. of that day, an explosion occurred in one or more of the buildings, and both buildings at once caught fire. Thereafter the fire spread to and consumed a large quantity of bark, some in an uncovered stack or pile, and some under sheds, for total loss of which the action was

Digitized by Google

brought. Questions of fact much disputed in the testimony were: The precise time when the explosion took place, the precise time when the bark in the uncovered stack or pile ignited, and the precise time when the bark under sheds ignited. The pertinency of these questions is apparent from the instruction given to the jury that, if, at noon on the day of the fire, any part of the insured bark was so ignited that naturally and inevitably and directly, without the intervention of any new cause, it must have been consumed and destroyed by fire, then the jury must find a verdict for the plaintiff for the full amount of the insurance. This instruction correctly stated the law, and the jury rendered a verdict for the full amount, with interest. The questions presented upon this appeal are: (1) What was "the insured bark"? (2) What moment of time was "noon" within the meaning of the policy? (3) Whether there was any breach of warranty by the insured. In determining these questions, it will be necessary to set forth the language of the policy at some length.

The defendant had no license to do business in Virginia, and at the time had no agent in Virginia. There was put in evidence section 1269a of the Laws of Virginia [Va. Code 1904, p. 630], which enacted that:

"Fire * * * insurance companies not incorporated by the laws of the state of Virginia, but legally authorized to do business in this state, shall not make contracts of insurance on property herein save through regularly constituted agents of such companies residing in the state of Virginia."

What bearing this statute was supposed to have upon this case is not apparent. The defendant company was not within its terms, since it was not "legally authorized to do business" in that state. Moreover, the act was powerless to affect the contracts of an insurance company of another state made outside of Virginia. The application for this policy was made in New York by the regular insurance broker of the plaintiff, was accepted here, and the policy executed here. The policy is in the standard form of New York policy. It begins with the statement that:

"The Globe & Rutgers Insurance Company in consideration of the stipulations herein named and of one hundred dollars premium does insure David Moffat Company for the term of one year from the 8th day of January, 1901, at noon, to the 8th day of January, 1902, at noon, against all direct loss or damage by fire, except as hereinafter provided, to an amount not exceeding ten thousand dollars, to the following described property while located and contained as described herein, and not elsewhere, to wit."

Here follows the extensive blank space found in all forms of policy. It has not been filled in with any written or typewritten description of the property, but an elaborate and detailed printed description has been pasted in as a rider and made a part of the contract by signature of an officer of the company. This printed paper bears internal evidence of having been prepared by the Moffat Company. It contains separate descriptions of all the buildings on the plant (none of which are covered by this policy), and bears the printed signature "Charles M. Clarke, 100 William Street, New York," the insurance broker of the Moffat Company. This printed description, thus inserted, reads as follows

Digitized by Google

(some details of enumeration being omitted for the sake of brevity, and for convenience of reference the word "bark" is italicized wherever it occurs; there are no italics in original):

"David Moffat Company.

"On the following described property situate on premises of the Iron Gate Tannery, at Iron Gate, Alleghany county, Virginia, as per plan No. 437 filed in the office of Charles M. Clarke, viz.:

"Nothing...at...On the frame and iron buildings known as the 'Boiler Houses and Bark Mill,' including foundations * * * also on steam engines * * * and all tools * * * contained therein, and marked No. 1 on said plan.

"Nothing...at...On the frame buildings known as 'Leach House and Coolers,' including foundations * * * also on steam engines * * * and all tools * * * and on *bark* and liquors contained therein, and marked No. 2 on said plan.

"Nothing...at...On the frame building * * * known as 'Beam House, Yard and Dry House,' including foundations * * *; also on buildings containing liquor tanks * * *; also on steam engines, machinery * * * and all tools * * * contained therein and marked No. 3 on said plan.

"Nothing...at...On hides and leather, * * * and on hair and glue stock, all while contained in said building marked No. 3 on said plan.

"Nothing...at...On *bark*, ground and unground, * * * tanning materials and supplies, contained in said building marked No. 3 on said plan.

"Nothing...at...In the frame building known as the office, including office furniture * * * contained therein and marked No. 15 on said plan.

"Nothing...at...On the frame building known as 'Hair House' including all machinery * * * contained therein, and marked No. 5 on said plan.

"Nothing...at...On the frame building known as 'Lime House,' including lime and other merchandise contained therein, and marked No. 6 on said plan.

"Nothing...at...On the frame building, including vats and all machinery and supplies contained therein, and marked No. 9 on said plan.

"Nothing...at...On the frame building, including vats and all machinery and supplies contained therein, and marked No. 10 on said plan.

"Nothing. .at...On the frame building, including vats and all machinery and supplies contained therein; and marked No. 11 on said plan.

"Nothing...at...On the stone building known as 'Yard No. 12' including vats and all machinery and supplies contained therein, and marked No. 12 on said plan.

"Nothing. .at...On hides, skins and leather contained in said building, marked No. 12 on said plan.

"Nothing...at...On the frame building * * * occupied as a dwelling * * * and marked No. 13 on said plan.

"Nothing...at...On frame building known as 'New Leach House' including foundations * * * also on steam engines * * * and all tools * * * and on *bark* and liquors contained therein and marked No. 16 on said plan.

"Nothing...at...On frame *Bark* Sheds, situated on the tannery premises, and marked No. 8 on said plan.

"$10,000 at 1% on *bark* in piles and under sheds, on the tannery premises, and marked No. 8 on said plan.

"Privilege to make necessary additions and this policy to cover therein and thereon, and to make alterations, and repairs. * * * This policy shall cover any direct loss by lightning."

Digitized by Google

The plan referred to is herewith reproduced. The explosion occurred in "Bark Mill No. 1" and "Leach House No. 16." At the time of the fire there was no pile or stack of bark adjoining Bark Shed No. 8, northeast of the railroad track. There was a pile or stack of

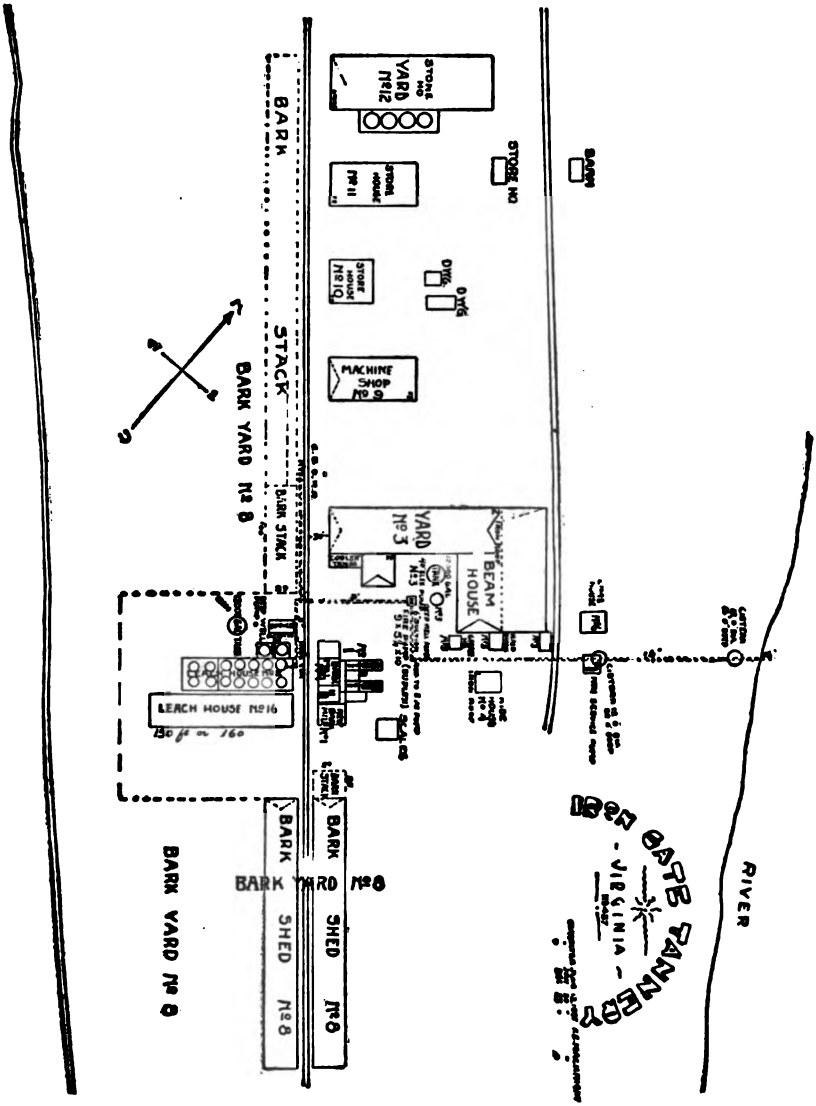

bark adjoining Bark Shed No. 8, southwest of the track, and lying between the shed and the Leach House No. 16. That stack and the bark in both bark sheds were all consumed.

In construing the above-quoted description, it should be borne in mind that it was not composed by the insurance company. With

Digitized by Google

painstaking accuracy the insured has prepared an elaborate and comprehensive enumeration of every variety of property it had at risk, distributed into separate groups, so as to enable it readily to insure one group in one company and another in another, and has secured the insertion of such complete enumeration unchanged in the body of the policy, although of the 17 groups this company has underwritten but a single one. This was a commendable method of filling in the description of property different portions of which were, presumably, insured in different companies; and the insured has relieved the printed description, which it prepared, of what might otherwise present uncertainties, by accompanying it with a plan or map drawn to scale after survey.

In our opinion a part of the contract, thus prepared by the insured himself, is not to be expanded as against the insurer beyond its plain and ordinary meaning, on any theory of interpretation against the issuer of the policy. The insured has himself prepared a description which distributes his insurable property into groups, and he should not complain if liability for a subsequent loss is adjusted upon the basis that the insurance written on a single group covers only that group as the printed description and the plan describe it.

Looking now at the printed description of the property insured—"bark in piles and under sheds, on the tannery premises, and marked No. 8 on said plan"—the first suggestion is that it seems to imply that the bark insured shall be not only "in piles," but also "under sheds." The phrase used is "bark in piles and under sheds," and the group next immediately preceding is "bark sheds, situate on the tannery premises and marked No. 8 on said plan." A careful study of the description shows that the draughtsman has in other cases provided for insurance on a particular building and fixtures in one group, and immediately thereafter for the contents of the building in a separate group. See the Beam House No. 3, and Yard No. 12. It would be not at all a forced construction, but on the contrary a reasonable and natural one, which would restrict the last group to bark which was piled up under the frame Bark Sheds No. 8 of the preceding group. It would be a forced and unnatural construction which would broaden the language so as to include "bark in piles" wherever it might be on the tannery premises. If one wished to express that idea, it would be sufficient for him to say "bark in piles on the tannery premises," without adding the other words. Having added them, it is safe to presume that he did so because he wanted to express the idea which their addition naturally conveys. Moreover, the clause cannot be held to cover all bark in piles anywhere on the tannery premises, because the printed description expressly states that by this policy there is insured nothing on bark contained in the leach house, nothing on bark contained in Beam House and Yard No. 3, and nothing on bark contained in the new leach house.

A reference to the plan, however, indicates that the draughtsman did not intend to limit insurance to bark under the sheds No. 8, as the text of the description seems to indicate. So far as the text shows, the only "No. 8" is certain bark sheds; but the plan shows other places than these sheds also designated by the number "8," so that the clause

Digitized by Google

may fairly be read to cover bark not under sheds, but in piles, on such part of the tannery premises as are marked No. 8 on the plan. Looking now at the plan, we find certain portions of the premises marked as "Bark Yard No. 8." At the right-hand side of the plan those words are written directly across the two bark sheds, thus indicating that the sheds themselves are located in the bark yard. The title extends beyond the shed northeast of the railroad track into an open space, indicating that, until the boundary line of some other part of the property is reached, that open space is part of the bark yard. The same title extends beyond the shed southwest of the track into another open space, and the words "Bark Yard No. 8" are repeated in the lower right-hand corner, indicating that such open space, so far as the plan shows it to be open, is also a part of the bark yard. To the left of the plan (northerly and westerly of the main group of buildings), the words "Bark Yard No. 8" again appear, in an open space lying southwest of the track. It appears that at the time the plan was prepared bark was stacked in this part of the yard along the track, from the dotted line, which indicates the plot of land surrounding the main buildings to the property line of the plant—or at least to the limit of the property shown on the plan. To the left of the main group of buildings, however, northeast of the railroad, in the space where structures Nos. 9, 10, 11, 12, and the storehouse and dwelling ("Dwg") are scattered about the designation "Bark Yard No. 8" does not appear; nor is that title written across the track as at the other side of the plan. Between those portions of the bark yard, lying southwest of the track, and marked "No. 8," there is a square plot of land indicated by the railroad track and by a dotted line. This is not designated by any name, but within it are located the office and Leach Houses No. 2 and No. 16 besides a pump and tank. The testimony shows that at the time of the fire there was nothing on the property corresponding to the dotted line—no fence or inclosure. It may be inferred, in the absence of testimony to the contrary, that such was the condition of affairs when the policy was issued; but that circumstance is not material. There is nothing to show that the insurer made any examination or survey of the property before underwriting. It accepted the description of the premises contained in the printed statement and plan which the insured furnished. The impression conveyed to any one looking at that plan would be that out of the whole space southwest of the track there was reserved a square plot as a location for the office, leach houses, etc., and that the remainder only was "Bark Yard No. 8." And the plan, taken in connection with the description, seems quite plainly to indicate that the risk taken is on bark in piles on that part of the tannery premises marked "No. 8."

As has been seen, at the time of the fire, there was a stack or pile of bark within the square plot indicated by the dotted line and close to the southwest bark shed. This pile was consumed, and its value ($2,625) is included in the verdict. Under the construction given to the contract, supra, the contents of that pile were not within the risk. Defendant requested the court so to instruct the jury, which was denied, and exception taken. This error cannot be corrected merely by deducting the value of the stack from the amount of the verdict. Un-

Digitized by Google

der the instruction which was referred to at the outset of this opinion, the jury found that part of the insured property was on fire before noon; but they might, under the charge, have reached this conclusion, although they were satisfied that, although at that time the stack was on fire, no spark had as yet reached either shed. Two or three of defendant's exceptions sufficiently raise this point.

As there must be a new trial, it is important that this court should express its opinion on another question which has been raised in the case, viz.: What is the meaning of the word "noon"? Did the policy expire at 12 o'clock by "Eastern standard time," or at 12 o'clock by mean solar time at Iron Gate? The difference of time is 19 minutes.

Apparent solar time is time measured by the actual passage of the sun over meridian. Owing to the variability of this measure, apparent time is a varying quantity, and therefore for purposes of practical convenience an arbitrary measure was long since adopted, known as mean solar time. Mean solar time is defined by the motion of a fictitious sun called "the mean sun," which is imagined to move with perfect uniformity, being sometimes behind the true sun, and sometimes in advance of it. Mean solar time changes with the longitude, and in a country of this magnitude the difference of time between places caused much difficulty in the regulation of the movements of railway trains. Therefore, about the year 1883, the principal railroads of the United States adopted an arbitrary standard for the purpose of securing uniformity in the operation and connections of their trains. Under this system, the country was divided into four sections (Eastern, Central, Mountain, and Pacific), approximately 15 degrees in width from east to west, and the time of the central meridian of each section was adopted as the uniform railroad time for the entire section. "Eastern standard time," under this system, was the actual time of the seventy-fifth meridian west from Greenwich. New York City and Iron Gate are both in the Eastern section.

What meaning is to be attached to the word "noon," as used in this policy? Is it 12 o'clock mean solar, or 12 o'clock standard time? In the first place, it may be noted that this is a question of the construction of a contract inter partes. No official action, such as the opening of a court, is involved, as was the case in Curtis v. March, 3 H. & N. 866; Henderson v. Reynolds, 84 Ga. 159, 10 S. E. 734, 7 L. R. A. 327; Searles v. Averhoff, 28 Neb. 668, 44 N. W. 872; Texas T. & L. Co. v. Hightower (Tex. Sup.) 96 S. W. 1071, 6 L. R. A. (N. S.) 1046; and Ex parte Parker, 29 S. W. 480, 35 Tex. Cr. R. 12. The rule of construction which applies to all other contracts applies to contracts of insurance—effect must be given to the intention of the parties. Ripley v. Ætna Ins. Co., 30 N. Y. 136, 86 Am. Dec. 362. What did both sides understand to be the time limits of this contract when it was made? By what measurement of time was noon of January 8, 1901 (its beginning), and noon of January 8, 1902 (its ending) to be regulated? If the contract were one to be performed here, the answer would be easy. Section 28, c. 677, p. 1491, Laws N. Y. 1892, provides that—

"the standard time throughout this State is that of the seventy-fifth meridian of longitude west from Greenwich and all courts and public offices and

Digitized by Google

legal and official proceedings, shall be regulated thereby. Any act required by or in pursuance of law to be performed at or within a prescribed time, shall be performed according to such standard time."

Business in this city has conformed itself to this regulation so universally that this court will take judicial notice of existing conditions. It is according to standard time that the teller's windows in every bank, state and national, open and close; that the hour of delivery is fixed for all stocks, bonds, warehouse certificates, and other evidences of ownership of property bought and sold on all the exchanges; that the vast army of labor begins and ends work; that vessels depart for every port foreign and domestic; that every business and social engagement is made and kept. It is the time according to which all clocks displayed on tower, façade, and post, and in every watchmaker's window are regulated; at which the "time-ball" on the tower of the telegraph building falls, and to which the watches in the pockets of every individual, who undertakes to keep his watch timed at all, are conformed. It would require very strong evidence to show that in a contract for a term of insurance upon property in this city the parties intended that the term should be measured otherwise than by standard time.

Nevertheless, conditions may be so different in other localities as to lead to a different conclusion as to the meaning of the word "noon." The map shows that at Pittsburgh, Pa., Eastern standard time ceases, and Central standard time begins. Of the conditions in that city this court cannot take judicial notice. One time or the other, or both, may be in common use. It may be 11 o'clock on one block when it is 12 o'clock on the other. Courts and public offices may conform to one time and business to another. Different branches of business may regulate their affairs by different times. It would seem to be the proper disposition of a case, where the court cannot take judicial notice of the conditions, to receive testimony as to what they were. Such a disposition of a similar case was approved by the Court of Appeals of Kentucky, in Rochester German Insurance Co. v. Peaslee Gaulbert Co., 87 S. W. 1115, 27 Ky. Law Rep. 1155, 1 L. R. A. (N. S.) 364. In the case at bar defendant put in testimony bearing upon this question, and contends that it is uncontradicted and controlling. We do not pass upon it now, because there will have to be a new trial, and the testimony then presented may not be precisely the same. The trial judge charged the jury that:

"In the absence of any language which indicates another intention, the law is so that by 12 o'clock noon is meant noon by solar time, which at Iron Gate, Va., occurs about 19 minutes later than the noon fixed by standard time."

To this defendant excepted, and the record discloses sufficient as to conditions prevailing at Iron Gate to sustain this exception.

Incidentally, it may be noted that the words whose meaning is in dispute—"at noon"—are not words selected by the insurer. They are imposed alike upon insurer and insured, who contract in this state, by the statutes prescribing the so-called "Standard form of Fire Insurance Policy," which will be found in Richards on Insurance (2d Ed.) Append. p. 584. As to construction of a form thus prepared, see Peabody v. Satterlee, 166 N. Y. 174, 59 N. E. 818, 52 L. R. A. 956.

Digitized by Google

There is no force in the suggestion that defendant has not pleaded usage or custom as to observance of time at Iron Gate. Plaintiff is seeking to recover upon a contract, which contains what is perhaps an ambiguous term. It means one thing where the contract is made; it may mean a different thing where it was to be performed, and testimony calculated to relieve that ambiguity may be received without being specially pleaded.

We are unanimously of the opinion that the application, description, and plan did not contain a warranty or representation that at the time of the fire there would be no pile of bark elsewhere on the premises than in the bark yard.

Judgment reversed, and cause remanded for a new trial.

NOTE.[1]

What Law Governs Insurance Policies.

I. In General.

[a] (U. S. 1905) A certificate of insurance issued in Illinois to a resident in New York, which, by its terms, was first to take effect as a binding obligation when the insured should execute the agreement indorsed thereon to accept it, "subject to all the conditions therein contained," is a New York, and not an Illinois, contract, where New York was the state in which the required agreement was executed. Judgments, Meyer v. Supreme Lodge K. P. (1904) 178 N. Y. 63, 70 N. E. 111, 64 L. R. A. 840, and (1903) 82 App. Div. 359, 81 N. Y. Supp. 813, affirmed.—Supreme Lodge K. P. v. Meyer, 198 U. S. 508, 25 Sup. Ct. 754, 49 L. Ed. 1146.

[b] (U. S. 1902) Laws N. Y. 1877, c. 321, § 1, provides that no insurance company shall declare a policy forfeited for nonpayment of premiums without having first given assured 30 days' notice that the premiums were due, and that the policy would be forfeited if they were not paid. An application for life insurance in a New York company, made in the state of Washington, contained a provision that "the contract of insurance, when made, shall be held and construed * * * to have been made in the city of New York"; and the policy recited, "In consideration of the application for this policy, which is hereby made a part of this contract." The contract was delivered and the first premium paid in Washington. *Held*, that the policy was a New York contract, and governed by the statute. Judgment, Hill v. Mutual Life Ins. Co. (C. C.) 113 Fed. 44, affirmed.—Mutual Life Ins. Co. v. Hill, 118 Fed. 708, 55 C. C. A. 536.

[c] (U. S. 1903) Where an application for insurance was made, the policy was accepted, and the premium paid in Kentucky, no place of payment in case of loss being named therein, the contract was a Kentucky contract, and governed by the laws of that state. Judgment (1902) 115 Fed. 77, 52 C. C. A. 671, affirmed on rehearing.—Carrollton Furniture Mfg. Co. v. American Credit Indemnity Co., 124 Fed. 25, 59 C. C. A. 545.

[d] (U. S. 1901) Where an application for life insurance was made in Iowa by a resident of that state, and the medical examination was made, the premium paid, and the policy delivered in Iowa, the policy is an Iowa contract, and governed by the laws of that state then in force.—Kelley v. Mutual Life Ins. Co. (C. C.) 109 Fed. 56.

[e] (U. S. 1902) The answer in an action on a life insurance policy admitted that the defendant was legally admitted to do business in Massachusetts; that the policy in suit was issued on an application made in writing to its agent in that state where the applicant resided, and was there delivered to the applicant by such agent, to whom the first premium was paid. *Held* that, in the absence of other facts, the policy was a Massachusetts contract.—Albro v. Manhattan Life Ins. Co. (C. C.) 119 Fed. 629.

---

[1] Supplemental to note to Corley v. Travelers' Protection Ass'n, 46 C. C. A. 287.

Digitized by Google

[f] (U. S. 1906) Laws N. Y. 1892, p. 1958, c. 690, § 56, which expressly prohibits the appointment of a receiver for, or the direction of an accounting by, an insurance company, unless the Attorney General makes the application or approves the same, is a part of the contract of every policy holder of a New York Insurance company, although he may be a citizen of a foreign state; and he is bound thereby.—Brown v. Equitable Life Assur. Soc. (C. C.) 142 Fed. 835.

[g] (Ark. 1903) A life policy issued by a Missouri corporation, signed and sealed in Missouri, and calling for the payment of premiums there, and payment of the loss there, is a Missouri contract, and governed by its laws.—Franklin Life Ins. Co. v. Galligan, 71 Ark. 295, 73 S. W. 102, 100 Am. St. Rep. 73.

[h] (Ill. 1901) An insurance contract between a resident of Illinois and a benefit association organized under the laws of Massachusetts was solicited by a subordinate Illinois lodge. The insured's examination, his signing of the application, his making of answers to the questions propounded to him, and the payment of his dues and assessments, took place in Illinois. The benefit certificate required to be accepted in writing was accepted in Illinois. *Held*, that the question whether there was power in the subordinate lodge to waive a by-law of the association forbidding the admission of a liquor dealer would be determined by the laws of Illinois. Judgment, Royal Arcanum v. Coverdale, 93 Ill. App. 373, reversed.—Coverdale v. Royal Arcanum, 193 Ill. 91, 61 N. E. 915.

[i] (Ind. 1907) Where plaintiff paid the first premium on a life insurance policy when applying therefor in Kentucky, and the terms of the policy were agreed upon and the application was accepted by the company in New York, and the policy mailed there to its agent in Kentucky for unconditional delivery to plaintiff, the contract was completed when the policy was mailed and hence was governed by the laws of New York.—Equitable Life Assur. Soc. of United States v. Perkins, 80 N. E. 682.

[j] (Iowa, 1904) A policy of life insurance issued to a resident of Iowa, but providing that the premiums were to be paid at the insurer's office in New York, where payment of the insurance was also to be made, and signed at the insurer's home office in New York City, is a New York contract, governed by the laws of that state, though to take effect on delivery to the assured, in the absence of proof of the place of actual delivery.—Summitt v. United States Life Ins. Co., 123 Iowa, 681, 99 N. W. 563.

[k] (La. 1903) Where a citizen of Louisiana applied through a local agent for life insurance in a New York company, the application stating that the policy should not be binding until the premium was paid, and a policy was executed in New York under the application and forwarded to the local agent in Louisiana, who collected the premium and delivered the policy, the contract was perfected in the state of Louisiana, and was governed by the laws of that state, and not by the laws of the state of New York.—Grevenig v. Washington Life Ins. Co., 112 La. 879, 36 South. 790, 104 Am. St. Rep. 474.

[l] (La. 1905) A contract of insurance is completed at the place where the policy is delivered and the first premium collected.—City of Lake Charles v. Equitable Life Assur. Soc., 114 La. 836, 38 South. 578.

[ll] (N. J. 1905) Where property insured was located in the state of New York, and the policy contained the express provision that it should not be valid until countersigned by the agent of the company in the state of New York, the company being a corporation of Connecticut, and when it was so countersigned it was mailed to the insured at his residence in Jersey City, the insurance contract was a New York contract and governed by its laws as to its validity, construction, and discharge, and the debt due insured on the policy might be garnished there.—Orient Ins. Co. v. Rudolph, 69 N. J. Eq. 570, 61 Atl. 26.

[m] (N. Y. 1904) A fraternal benefit corporation, organized under the acts of Congress, issued a certificate of membership, through its officers in Chicago, to a resident of New York, on which was printed an acceptance of the certificate, subject to all the conditions therein contained, which was signed by the applicant in New York. The conditions provided that the certificate was to take effect when the acceptance was executed. *Held* a New York

Digitized by Google

contract, to be enforced according to the laws of that state. Judgment (Sup. 1903) 82 App. Div. 359, 81 N. Y. Supp. 813, affirmed.—Meyer v. Supreme Lodge K. P., 178 N. Y. 63, 70 N. E. 111, 64 L. R. A. 839.

[n] (N. Y. 1906) Where a policy of life insurance was signed and delivered in the city of New York, and provided for the payment of premiums to the company and the amount of the policy by the company to be made in that city at the home office after receipt of satisfactory proofs of death, it is a New York contract, though the insured resided in another state.—Napier v. Bankers' Life Ins. Co., 51 Misc. Rep. 283, 100 N. Y. Supp. 1072.

[o] (Ohio, 1899) Where applications are made in Ohio to a New York corporation for insurance, and the policies are delivered in Ohio, and the premiums are all paid there, the contract is an Ohio contract, and governed by its laws.—Plaut v. Mutual Life Ins. Co., 26 Ohio Cir. Ct. R. 499.

[p] (Pa. 1905) Where a policy of insurance must be countersigned by an agent in another state, the contract is governed by the laws of the state where the agent resides.—Hardiman v. Fire Ass'n of Philadelphia, 212 Pa. 383, 61 Atl. 990.

[q] (Wis. 1905) Where an application for life insurance was signed in Wisconsin and forwarded to the insurer's office in Pennsylvania, and there a policy was issued and mailed to the applicant, who in Wisconsin received it and mailed the insurer a note payable in Pennsylvania for the premium, the contract evidenced by the policy and note was a Pennsylvania one.—Presbyterian Ministers' Fund v. Thomas, 126 Wis. 281, 105 N. W. 801, 110 Am. St. Rep. 919.

[r] (Can. 1902) A contract of insurance, made in Ontario, where the premiums are payable, proof of death to be furnished, and the insurance money to be payable is an Ontario contract, and will be governed by the law of Ontario, although the assured lived in Manitoba, and made application there to the local agent for the insurance; but a revocation of the benefit of the wife of the insured in the policy, made in Manitoba, will be governed by the law of that province.—National Trust Co. v. Hughes, 14 Man. R. 41.

[s] (Eng. 1902) A contract between parties resident in different jurisdictions is to be construed, in respect of its national character, by the intention expressed therein. A policy of insurance executed in Jersey, and providing as a condition precedent to any action thereon an arbitration and award in accordance with the arbitration act of 1889, is an English contract, on which no action can be brought, either in Jersey or in England, until the condition is fulfilled.—Spurrier v. La Cloche, 71 Law J. P. C. 101, [1902] App. Cas. 446, 86 Law T. 631, 51 Wkly. Rep. 1.

II. Nature, Requisites and Validity.

[a] (U. S. 1902) A contract of insurance, in a New York company was governed by the laws of Kentucky, where the policy was delivered and the premiums paid by the insured in that state; and therefore under the Kentucky statute insured's answers in the application were representations, and not warranties, though the application warranted the answers to be true.—Carrollton Furniture Mfg. Co. v. American Credit Indemnity Co., 115 Fed. 77, 52 C. C. A. 671.

[b] (U. S. 1902) Where a contract of life insurance is in fact made within a state between a resident thereof and a foreign insurance company legally authorized to do business therein, the parties cannot avoid statutory provisions of the state, declaring a rule of public policy with respect to such contracts made within its jurisdiction, by inserting provisions in the policy adopting the law of another state.—Albro v. Manhattan Life Ins. Co. (C. C.) 119 Fed. 629.

[c] (Miss. 1906) A policy insuring property in the state was written at the home office of a foreign insurance company and was applied for by the insured, a citizen of the state, through insurance brokers, residing in a sister state, who represented the insured. The insurer had no agent in Mississippi doing business for it. *Held*, that the contract of insurance was not a Mississippi contract, but a contract of the state of the domicile of the insurer, and was not void, though the insurer had not complied with Code 1880, § 1073, and Laws 1890, pp. 15, 16, c. 4, prescribing the conditions on which

Digitized by Google

foreign insurance companies may do business in the state.—Swing v. B. E. Brister & Co., 87 Miss. 516, 40 South. 146.

[d] (N. H. 1903) Where a life insurance policy was issued in the state of New York, the contract is governed by the laws of that state so far as they relate to its nature, validity, and interpretation.—Seely v. Manhattan Life Ins. Co., 72 N. H. 49, 55 Atl. 425.

[e] (N. J. 1905) Where property insured was located in the state of New York and the policy contained the express provision that it should not be valid until countersigned by the agent of the company in the state of New York, the company being a corporation of Connecticut, and when it was so countersigned it was mailed to the insured at his residence in Jersey City, the insurance contract was a New York contract and governed by its laws as to its validity, construction, and discharge, and the debt due insured on the policy might be garnished there.—Orient Ins. Co. v. Rudolph, 69 N. J. Eq. 570, 61 Atl. 26.

[f] (N. D. 1903) Persons applying for insurance or membership in a mutual company must take notice of the laws of the state under which it is organized and authorized to do business and a total disregard thereof in the issuance of policies renders them void.—Montgomery v. Whitbeck, 12 N. D. 385, 96 N. W. 327.

[g] (R. I. 1905) Where a life insurance policy was issued in Massachusetts by a Massachusetts company, and was to be executed there, it was subject to Rev. Laws Mass. 1894, p. 675, c. 522, as amended by Laws Mass. 1895, p. 272, c. 271, § 21, declaring that no oral or written misrepresentation or warranty made in the negotiation of a contract of insurance by assured, or on his behalf, shall be deemed material, or defeat or avoid the policy, or prevent it attaching, unless such misrepresentation or warranty is made with actual intent to deceive, or unless the matter misrepresented or made a warranty increased the risk of loss. Petition for reargument (1902) 24 R. I. 7, 51 Atl. 1049, 96 Am. St. Rep. 698, granted.—Leonard v. State Mut. Life Assur. Co., 27 R. I. 121, 61 Atl. 52.

III. Construction and Operation.

[a] (U. S. 1901) A contract of life insurance is to be construed in accordance with the laws of the state where made. Judgment, Getz v. Supreme Council American Legion of Honor (C. C.) 109 Fed. 261, affirmed.—Supreme Council of American Legion of Honor v. Getz, 112 Fed. 119, 50 C. C. A. 153.

[b] (U. S. 1904) An English valued policy on a ship contained the provision: "General average salvage, and special charges as per foreign custom, payable according to foreign statements, * * * or per rules of port of discharge, * * * at the option of assured." *Held*, that under such provision the law of New York, the port of discharge, governed as to the amount payable by the insurer on account of salvage arising from stranding, there adjusted, and the insured was entitled to recover on the policy, in accordance with the law of the port, a sum which bears the same ratio to the entire salvage he was compelled to pay as the amount of the policy bears to the policy value of the ship, although the award was made on a higher valuation, and not, as by the law of England, only such part of said sum as bears the same ratio to the whole as the policy valuation bears to the valuation on which the adjustment was made. Decree (D. C. 1903) 124 Fed. 93, affirmed.—International Nav. Co. v. Sea Ins. Co., 129 Fed. 13, 63 C. C. A. 663.

[c] (U. S. 1904) A claim arising under a policy of indemnity insurance, which was signed by the insured in New York and is there payable is governed as to interest by the law of New York, although the policy may have been delivered in another state.—Cudahy Packing Co. v. New Amsterdam Casualty Co. (C. C.) 132 Fed. 623.

[d] (Ala. 1904) Though a life policy contained a provision that it should be construed according to the laws of the state of New York, where no evidence of those laws has been introduced they must be disregarded, since judicial knowledge does not extend to them.—New York Life Ins. Co. v. Smith, 139 Ala. 303, 35 South. 1004.

[e] (Ark. 1904) A provision in a policy of life insurance issued by a New York company, providing that it "shall be governed by and construed only ac-

Digitized by Google

cording to the laws of New York," does not constitute the statutes of that state the laws by which it shall be construed, where the contract was made and the policy delivered in Arkansas; and the insufficiency of a notice of the maturity of a premium under the New York statute relating to such notices is immaterial in an action on the policy in Arkansas.—Mutual Reserve Fund Life Ass'n v. Minehart, 72 Ark. 630, 83 S. W. 323.

[f] (Cal. 1905) In the construction of maritime insurance policies made payable at San Francisco, the law of California governs.—Progresso S. S. Co. v. St. Paul Fire & Marine Ins. Co., 146 Cal. 279, 79 Pac. 967.

[g] (Iowa, 1903) A policy insuring plaintiffs, who were bankers located in Mexico, against loss in the shipment of money packages by mail, was executed and mailed to plaintiffs at their place of business in Mexico, from which the application for such policy had been mailed, and was to cover shipments by registered mail within the United States. A money package was registered from one point in the territory of Arizona to another, and was stolen from the mails. The policy required that the packing and sealing of insured packages should be witnessed by two adults, one of whom should have charge of the same until deposited and registered at the post office. *Held* that, since the policy must be construed as contemplating the preparation of the money packages at plaintiffs' place of business in Mexico for transportation, whether the package was packed, sealed, and mailed by adults should be determined by the laws of Mexico.—Banco De Sonora v. Bankers' Mut. Casualty Co., 95 N. W. 232.

[h] (Iowa, 1904) Where a policy intended to cover articles sent by mail recited that it was to cover shipments within the United States, or between the United States and the Dominion of Canada, the kingdom of Great Britain and Ireland, and the continent of Europe, and the insured was located in the republic of Mexico, it must have been intended by the contracting parties that the articles would be prepared for transportation in Mexico; and hence the law of that country governed, in determining who was an adult, within a provision of the policy requiring articles to be packed for shipment in the presence of two adults.—Banco De Sonora v. Bankers' Mut. Casualty Co., 124 Iowa, 576, 100 N. W. 532, 104 Am. St. Rep. 367.

[i] (Ky. 1904) A statute of another state requiring a surrender value on lapsed life policies does not apply to a contract in Kentucky by a company incorporated in the foreign state.—Washington Life Ins. Co. v. Glover, 78 S. W. 146, 25 Ky. Law Rep. 1327.

[j] (Ky. 1904) A policy issued by a New York corporation in Kentucky is not affected by subsequent legislation of New York, as such subsequent laws can have no extraterritorial nor retrospective effect.—Provident Sav. Life Assur. Soc. v. Bailey, 80 S. W. 452, 25 Ky. Law Rep. 2251.

[k] (Mass. 1902) St. 1894, c. 522, § 73, the principal clause of which relates to any claim arising under a policy "which has been issued in this commonwealth" by any life insurance company, contains a proviso requiring "every life policy" which contains a reference to the application of the insured to include a copy of the application, and provides that, unless a copy thereof is attached to the policy, the application shall not be received in evidence. Section 3 provides that all contracts of life insurance in the commonwealth shall be deemed to be made therein. *Held*, that the provision in reference to attaching a copy of the application to the policy did not apply to a contract of life insurance made in a sister state between a foreign insurance company and a person domiciled in Massachusetts, notwithstanding section 3.—Johnson v. Mutual Life Ins. Co., 180 Mass. 407, 62 N. E. 733, 63 L. R. A. 833.

[l] (Mass. 1904) A policy in a foreign insurance corporation is not affected by the provisions of the statutes authorizing a recovery of the cash surrender value of forfeited policies.—Ferguson v. Union Mut. Life Ins. Co., 187 Mass. 8, 72 N. E. 358.

[m] (Mo. 1902) Where property located in Kansas was insured in that state by an Illinois corporation doing business in Kansas, and the property was destroyed in Kansas, an action on the policy in Missouri is governed by the laws of Kansas as to all matters relating to the performance of the contract, and by the law of Missouri as to all matters relating to the remedy.—Thompson v. Traders' Ins. Co., 169 Mo. 12, 68 S. W. 889.

Digitized by Google

[n] (Mo. 1902) Rev. St. 1889, § 5927, allowing a recovery of 10 per cent. damages in an action on an insurance policy for vexatious delay in paying a loss, is a law relating to the performance of the insurance contract, and not to the remedy; and hence in a suit in Missouri on an insurance contract made in Kansas, between citizens of that state, there can be no recovery under the Missouri statute for vexatious delay.—Thompson v. Traders' Ins. Co., 169 Mo. 12, 68 S. W. 889.

[o] (Mo. 1902) Where a policy declared that it should be construed according to the laws of the state of New York, but it was delivered in Missouri, where the insured resided, the laws of Missouri governed in the construction of the policy.—Pietri v. Seguenot, 96 Mo. App. 258, 69 S. W. 1055.

[p] (Mo. 1907) Where a life policy provided that the manner of ascertaining the term of extended insurance, on default in payment of premiums, should be determined by the Maine nonforfeiture law, and the actuaries' computation in accordance with the law extended the policy for only 5 years, 339 days, a table printed on the back of the policy showing that such extension was 11 years, 288 days, which table was not referred to in the policy nor made a part thereof, was ineffective to control the policy provision.—Dakan v. Union Mut. Life Ins. Co., 102 S. W. 634.

[q.r] (N. Y. 1905) Where a beneficial insurance certificate provided that the contract should be governed by the laws of Ohio, and contained a stipulation that the place of the contract was agreed to be the home office of the association in a certain city in Ohio, and the certificate was executed and issued at the home office of the association in Ohio, and was made payable there upon presentation to the association at that place of proper proofs of death, and premiums or assessments were required to be paid at the home office, the laws of Ohio would control in determining who were the beneficiaries in the certificate, the distributive share to which each was entitled, and any issue which might arise between insured or the beneficiaries and the insurer, although insured and the beneficiaries were residents of the state of New York when the certificate was issued, and continued to be such until the death of insured.—Burns v. Burns, 109 App. Div. 98, 95 N. Y. Supp. 797.

[s] (Tex. 1901) A life policy provided that it should be construed under the laws of Pennsylvania, where the company was chartered. In an action in Texas, where no proof was made of the Pennsylvania laws, the court charged that under such laws certain representations in an application for reinstatement were material. *Held* not error, since the representations would be material under the Texas law, and, in the absence of evidence, the law of Pennsylvania should be presumed to be the same.—Ash v. Fidelity Mut. Life Ass'n, 26 Tex. Civ. App. 501, 63 S. W. 944.

[t] (Tex. 1905) Where an application for a life policy in a New York company is made, and the policy is delivered in Texas, a New York statute prohibiting forfeitures for nonpayment of premiums, unless written notice shall have been duly addressed to the insured, forms no part of the contract of insurance, though the policy itself provides, in general terms, but without reference to the New York law, for a notice of accruing premiums.—Cowen v. Equitable Life Assur. Soc., 84 S. W. 404.

[u] (Eng. 1901) The risk covered by a marine policy of reinsurance had been offered by the plaintiffs, an English corporation, to the defendants, a Swedish corporation, carrying on business in Sweden, through the London agent of the latter, and had been accepted by the latter in Sweden, and the policy was executed there according to Swedish law. The policy was in the English language, and in the ordinary Lloyd's form, being substantially identical with the original policy and an earlier policy of reinsurance from which it sprang, both of which were made in England and governed by English law; and it contained a clause providing that all claims and losses should be payable in London, that payment should be made on the claim note of the plaintiff corporation, and that in case of any dispute under the policy the defendants should be bound in all things by the jurisdiction and decision of the English law courts. *Held*, that the policy must be construed by English law, inasmuch as the circumstances showed that it was the intention of the parties that it should be construed by English, and not by Swedish, law.—Royal Exch. Assur. Corp. v. Sjoforsakrings Aktie-Bolaget Vega, 70 Law J. K. B. 874,

Digitized by Google

[1901] 2 K. B. 567, 85 Law T. 241, 50 Wkly. Rep. 25, 6 Com'l Cas. 189, 9 Asp. 233.

[v] (Eng. 1902) A policy of reinsurance on a ship was executed in Sweden by a Swedish corporation according to Swedish law. It was in the English language and in the ordinary Lloyd's form, being substantially identical with the original policy on the ship and an earlier policy of reinsurance, both of which were made in England and governed by English law. It contained a clause providing that all claims and losses should be payable in London. and that in case of any dispute under the policy the defendants should be bound in all things by the jurisdiction and decision of the English law courts. *Held*, that the policy must be construed by English law, as the circumstances showed such to be the intention of the parties.—Royal Exch. Assur. Corp. v. Sjoforsakrings Aktie-Bolaget Vega, 71 Law J. K. B. 739, [1902] 2 K. B. 384, 87 Law T. 356, 50 Wkly. Rep. 694, 7 Com'l Cas. 205.

(154 Fed. 22.)

In re BAXTER & CO.

(Circuit Court of Appeals, Second Circuit. February 28, 1907.)

Nos. 105, 208, 159, 182.

1. BANKRUPTCY—ATTORNEY'S LIENS—ORDER.

Where an order was made in bankruptcy proceedings pending a motion to dismiss the proceedings before adjudication directing the bankrupt to deposit $50.000 to stand as security for the payment of all disputed claims, the cost of the proceedings and all attorney's liens or equitable assignments. etc., such order protected any lien which the attorney for the petitioning creditors might have for his services.

2. ATTORNEY AND CLIENT—LIEN ON CAUSE OF ACTION.

In the absence of a statutory provision, an attorney has no lien on his client's naked cause of action; his right being limited to the fruits of the litigation.

[Ed. Note.—For cases in point, see Cent. Dig. vol. 5, Attorney and Client, §§ 399–406.]

3. SAME—SETTLEMENT BETWEEN PARTIES.

A client may settle a controversy with the opposite party against the consent of his attorney either before or after action brought, unless the settlement is made for the purpose of depriving the attorney of his claim.

[Ed. Note.—For cases in point, see Cent. Dig. vol. 5, Attorney and Client, §§ 407–417.]

4. COURTS—FEDERAL COURTS—STATE STATUTES—ATTORNEY'S LIENS—ENFORCEMENT.

Code Civ. Proc. N. Y. § 66, creating an attorney's lien on the client's cause of action, etc., and providing for the enforcement thereof on petition, was not a mere practice act, but created a right and provided a remedy for its enforcement, and was therefore controlling on the federal courts sitting in such state.

[Ed. Note.—For cases in point, see Cent. Dig. vol. 13, Courts, §§ 939–949.

State laws as rules of decision in federal courts, see notes to Wilson v. Perrin, 11 C. C. A. 71; Hill v. Hite, 29 C. C. A. 553.]

5. BANKRUPTCY—DEPOSITS—PETITIONING CREDITORS—ATTORNEY'S LIENS—EXTENT.

Pending bankruptcy proceedings against a corporation all its claims, except those amounting to about $50,000, were settled, and an application made to dismiss the proceedings, which was denied, with leave to renew, and an order made directing the corporation to deposit $50,000 to stand as security for disputed claims, cost of bankruptcy proceedings, at-

Digitized by Google

torney's liens, or equitable assignments, etc. *Held*, that the attorney for the petitioning creditors was entitled to a lien which extended to all the demands of creditors who were settled with after the attorney's formal appearance in the proceeding in their behalf, under N. Y. Code Civ. Proc. § 66, creating an attorney's lien on his client's cause of action, claim, or counterclaim, and the proceeds thereof, in whosesoever hand they may come, not affected by any settlement between the parties before or after judgment or final order.

Appeal from the District Court of the United States for the Southern District of New York.

Benjamin F. Tracy and John M. Harrington, for appellants.
John J. Adams, for respondent.

Before WALLACE, LACOMBE, and COXE, Circuit Judges.

WALLACE, Circuit Judge. The question in this case is whether Mr. Abney, the petitioner for review, has an attorney's lien upon a fund in the custody of a court of bankruptcy. By the order under review the court below disallowed the lien.

In February, 1904, petitions in involuntary bankruptcy were filed in the United States District Court for the Southern District of New York against the corporation styled "A. B. Baxter & Co.," in behalf of certain creditors, by Mr. Abney as attorney, and February 6th the court appointed a temporary receiver of the property of the corporation. The assets of the corporation were about $229,000, and its debts amounted to about $850,000. Pending a hearing upon the petitions, one Smathers and others, who were interested in effecting a financial rehabilitation of the corporation, made a settlement in behalf of the corporation with all of its creditors whose demands were undisputed, purchasing these demands and obtaining assignments thereof. These settlements were made upon the understanding that the liabilities of the corporation were to be paid in full; and the hearing upon the petition was adjourned from time to time to enable this to be done. The creditors were numerous, were scattered throughout many states, and the demands of some of them were disputed, wholly or in part, by the corporation. By June, 1904, over $800,000 had been paid in settlement of recognized claims; but the efforts to adjust the disputed claims, amounting to about $50,000, had been ineffectual. Thereafter, and in that month, the corporation applied to the court to dismiss the bankruptcy proceeding, and Mr. Abney appeared in opposition. The court denied the application provisionally, with leave to renew, and made an order directing the corporation to deposit $50,000, which was to stand as security for the payment of all the disputed claims, the costs of the bankruptcy proceeding, and "of such attorney's liens or equitable assignments as exist in the premises, if any."

The lien for attorney's services which is claimed by Mr. Abney is based upon his services for a number of those creditors for whom he had formally appeared in the bankruptcy proceeding, whose claims were settled, and who had employed him to collect these claims. Before these claims had been settled he notified the attorneys for the corporation that, if any of these creditors whom he represented were

Digitized by Google

not settled with through him, his compensation must be provided for, and served them with a written notice that he had an attorney's lien upon the several demands for his services. They assured him that he would be protected. The negotiations for settlement were continued in behalf of the corporation directly with the creditors, and the payments were made directly to them. It does not appear that these creditors were personally irresponsible, or that the settlements with them were made for the purpose of defeating the claim of Mr. Abney, and the fair inference from the evidence is that the corporation and those acting in its behalf preferred to deal directly with the creditors in order to expedite the adjustment of its affairs.

The general rule that an attorney has a right in the nature of a lien to be compensated for his services out of a fund which is brought into a court of equity by his aid is well settled. His lien extends, however, only to that part of the fund which belongs to those parties whose interests he has represented in the suit. The fund in this case consists of a deposit brought into court to satisfy certain specified claims and liens. No part of it is a fund belonging to the creditors who had been settled with, as it was not brought into court for their benefit. In opposing the application to dismiss the bankruptcy proceeding, except as he may have represented the petitioning creditors and creditors holding disputed claims, Mr. Abney appeared only for himself and to protect his own interests, and the court very properly made an order protecting his rights, if he had any. It is manifest that the rule giving an attorney a lien upon the fund in court has no application to the case. If he has an attorney's lien based upon his services for the creditors who had been settled with, it is protected by the order.

We should entertain no doubt that no lien existed, if it were not for the effect to be given to the statute of New York respecting attorney's liens. An attorney has a lien upon the papers of his client in his possession, and a lien upon the fund or judgment which he has recovered for those whose interests he has represented in the suit. But, in the absence of some statutory provision, he has no lien upon the naked cause of action of his client. Indeed, the whole law of an attorney's lien rests upon the principle that he has secured the fruits of a litigation of which he ought not to be deprived by the unfair conduct of his client. But the courts have always recognized the right of the client to settle the controversy with the opposite party against the consent of his attorney, and, where this has been done after an action has been commenced, have repeatedly declared as in Emma Silver Mining Co. v. Emma Silver Mining Co. (C. C.) 12 Fed. 815, that the attorney's lien cannot stand in the way, unless the settlement was made for the purpose of depriving the attorney of his costs. The proposition has never been more plainly and concisely stated than by Judge Brewer, now Mr. Justice Brewer, in Swanson v. Chicago Ry. Co. (C. C.) 35 Fed. 638, where he said:

"It is unquestioned that parties to a lawsuit may settle and compromise their litigation without consulting their counsel; and that, in the absence of a statute giving the attorney a lien for his fees, courts will not intervene unless

Digitized by Google

there has been collusion between the parties, and an attempt to defraud the attorney out of his fees."

Upon the argument of the case, we were disposed to regard the New York statute as one merely regulating practice in the courts of the state, but a more careful reading of the statute satisfies us that it was intended to have a wider application, and should be treated as one establishing a substantive right. As merely a practice act, it would not affect the present proceeding, which is essentially an application to the equity powers of the court, as the courts of the United States, when exercising equity jurisdiction, are not controlled by the procedure established by the statutes of the states. But there are many instances when an enlargement of equitable rights or remedies by a state statute may be administered by the federal courts sitting within the state. "State Legislatures have certainly no authority to prescribe the modes or forms of proceeding in the courts of the United States; but having created a right, and at the same time prescribed the remedy to enforce it, if the remedy prescribed is substantially consistent with the ordinary mode of proceeding on the chancery side of the federal courts, no reason exists why it should not be pursued in the same form as in the state courts." Clark v. Smith, 13 Pet. 193, 10 L. Ed. 123.

There is no doubt that a distinction exists between such laws as regulate the rights of the parties, and such as apply only to the remedy. But, as was said in Brine v. Insurance Co., 96 U. S. 627, 639, 24 L. Ed. 858, although the rules of practice in the federal courts in suits in equity cannot be controlled by the laws of the states, "this principle has not been carried so far as to deny to any party in those courts substantial rights conferred by the statute of the state."

All rules concerning the transfer of property are "primarily at least, a matter of state regulation, and not one of purely general commercial law" (Etheridge v. Sperry, 139 U. S. 276, 11 Sup. Ct. 565, 35 L. Ed. 171), and state laws, creating interests in or liens upon property within the state, control the federal courts whenever the question arises as to the validity, extent, and all the conditions of such an interest or lien. Thus the effect and validity of chattel mortgages and general assignments are determined by the law of the state in which they are made. Etheridge v. Sperry, supra; Chicago Union Bank v. Kansas City Bank, 136 U. S. 223, 10 Sup. Ct. 1013, 34 L. Ed. 341. The federal courts have treated the question of an attorney's lien as depending upon the effect of local laws. In re Paschal, 10 Wall. 483, 495, 19 L. Ed. 992, where one of the questions was whether there was such a lien, the court said:

"As the original retainer was made in Texas, we are inclined to the opinion that the rights of the parties are to be regulated by the laws of that state."

In Central Railroad v. Pettus, 113 U. S. 116, 127, 5 Sup. Ct. 387, 28 L. Ed. 915, in passing upon the question of an attorney's lien, the court referred to the law of Alabama as the law by which the question must be determined.

The state statute (Code Civ. Proc.) is as follows:

"66. The compensation of an attorney or counsellor for his services is governed by agreement, express or implied, which is not restrained by law. From

Digitized by Google

the commencement of the action or special proceeding, or the service of an answer containing a counterclaim, the attorney who appears for a party has a lien upon his client's cause of action, claim or counterclaim, which attaches to the verdict, report, decision, judgment or final order in his client's favor, and the proceeds thereof in whosesoever hands they may come; and the lien cannot be affected by any settlement between the parties before or after judgment or final order. The court upon the petition of the client or attorney may determine and enforce the lien."

In Peri v. N. Y. C. R. Co., 152 N. Y. 521, 46 N. E. 849, the highest court of the state decided that this statute creates a lien upon the client's cause of action which attaches to the proceeds thereof in whosesoever hands they may come, and which cannot be affected by any settlement between the parties to the action. In Fischer-Hansen v. Brooklyn Heights R. Co., 173 N. Y. 492, 66 N. E. 395, the same court held that the lien created by the statute could be enforced by the attorney by a suit in equity against a party who upon a settlement of the cause of action with the opposite party had paid over the amount agreed upon and obtained a release of the cause of action. The court, among other things, said:

"Even if the relief ultimately granted is in the form of a money judgment, still that will be impossible only through the exercise of equitable jurisdiction in ascertaining the lien and determining its amount."

In both of these cases the court held that it was not necessary for the attorney to give any notice of his lien, but that the statute was notice of itself. The construction thus placed upon the statute is, of course, controlling in this court.

Does the statute preclude a settlement which is not intended to defeat the attorney's lien? In both of the cases referred to the client was insolvent, and the settlement was made without the knowledge of the attorney, and these facts were referred to in the opinions in each case. In the Peri Case the court said:

"The lien operates as security, and if the settlement entered into by the parties is in disregard of it and to the prejudice of plaintiff's attorney, by reason of the insolvency of his client, or for other sufficient cause, the court will interfere to protect its officer by * * * following the proceeds in the hands of third parties, who received them before or after judgment impressed with the lien."

In the Fischer-Hansen Case the court said:

"The Legislature did not intend to make the lien the chief thing, nor to compel the client to abdicate his position as principal in favor of the agent or attorney whom he employed in order to secure his rights. It did not intend to prevent him from dealing with his own property as he saw fit, provided he exercised his honest judgment and took no advantage of his attorney."

In Lee v. Vacuum Oil Co., 126 N. Y. 579, 27 N. E. 1018, although the statute was not expressly referred to in the opinion of the court, its effect was necessarily considered. The court said:

"We are of the opinion that the existence of such a lien in favor of the attorneys does not confer a right on them to stand in the way of a settlement of the action which is desired by the parties, and which does not prejudice any right of the attorneys."

In Poole v. Belcha, 131 N. Y. 200, 30 N. E. 53, the statute was considered by the court, and the decision was that, to warrant the

Digitized by Google

court in disregarding a settlement and release made between the parties to the action, "it must be shown that to give full effect to them will operate as a fraud upon the attorney or at least to his prejudice by depriving him of his costs or turning him over to an irresponsible client."

The result of these decisions is that the statute does not preclude a settlement between the parties made in good faith and not intended to deprive the attorney of his compensation; and, if the client prefers to abandon the action, or release his cause of action for a nominal consideration, he is at liberty to do so, and the lien becomes practically of no value to the attorney; but whatever is received as a consideration becomes a fund impressed with the lien in the hands of the opposite party.

Adopting this construction of the statute, we conclude that the lien should not have been disallowed by the court below, and that it attached to all the demands of those creditors who were settled with after the formal appearance of Mr. Abney in the proceeding as their attorney. The statute contemplates that the formal appearance shall be equivalent to a notice of lien, but it does not necessarily mean that an attorney who has not formally appeared, but his signified to the opposite party that he has been retained, by giving notice of his lien, shall not be protected.

The order is reversed, with costs, and with instructions to the court below to take such proceedings as may conform to this opinion.

(154 Fed. 27.)

LAMAR v. SPALDING.

(Circuit Court of Appeals, Third Circuit. May 20, 1907.)

No. 42.

1. ABATEMENT AND REVIVAL—TWO ACTIONS PENDING—STATE AND FEDERAL COURTS.

A proceeding for a writ of assistance in a state court, following a sale and conveyance of land under a decree of foreclosure entered by such court, does not operate as a bar, either temporarily or permanently, to an action of ejectment between the same parties for the same property, brought by the applicant for the writ in a federal court.

[Ed. Note.—Pendency of action in state or federal court as ground for abatement of action in the other, see notes to Bunker Hill & Sullivan M. & C. Co. v. Shoshone M. Co., 47 C. C. A. 205, and Barnsdall v. Waltemeyer, 73 C. C. A. 521.]

2. COURTS—FEDERAL COURTS—ADOPTION OF STATE PRACTICE—BILL OF PARTICULARS—AMENDMENT.

A federal court has power under the statute of New Jersey in the exercise of its discretion, to permit a bill of particulars in an action of ejectment to be amended on the trial.

3. WRIT OF ERROR—REVIEW—HARMLESS ERROR.

The direction of a verdict by a federal court, even if erroneous, is harmless error and not ground for reversal where, pending proceedings for review, a final judgment has been rendered in another proceeding between the same parties in a state court which conclusively determines the question at issue in favor of the party for whom the verdict was directed.

Digitized by Google

In Error to the Circuit Court of the United States for the District of New Jersey.

Alan H. Strong, for plaintiff in error.
Edmund Wilson, for defendant in error.

Before DALLAS and BUFFINGTON, Circuit Judges, and BRADFORD, District Judge.

BRADFORD, District Judge. This writ of error has been taken in an action of ejectment brought by Albert G. Spalding, the defendant in error, against David Lamar, the plaintiff in error, for the recovery of certain land in Monmouth County, New Jersey. The action was brought in Monmouth County circuit court, but was subsequently removed to the court below where Spalding recovered final judgment for the possession of the land June 6, 1906. It appears from the transcript of record that the land in question was conveyed June 10, 1893, by Alice C. Strong and William E. Strong, her husband, to Spalding, who mortgaged the same June 12, 1900, to Mrs. Strong to secure the payment of $50,000; that April 25, 1901, Spalding and his wife conveyed the land to Bernard Smith, and thereupon Smith mortgaged the same to Spalding to secure the payment of $29,000; that about a month afterwards Smith executed to Lamar a lease of the land for a term of five years; that the land was sold by the Sheriff in foreclosure proceedings instituted by Mrs. Strong in the Court of Chancery of New Jersey on the above mentioned mortgage executed to her by Spalding, the latter becoming the purchaser; and that the sheriff executed a deed of the land to Spalding as such purchaser. Lamar, notwithstanding the execution of the sheriff's deed, continued to hold possession of the land sold, and Spalding applied by petition to the Court of Chancery for a writ of assistance to dispossess Lamar and gain possession as purchaser. While Lamar was not a party to the foreclosure suit proper, he appeared and became a party to the proceeding for the writ of assistance. Full opportunity was granted to both Lamar and Spalding to adduce evidence and be heard for and against the application, and a large amount of evidence on the subject was in fact taken. The Court of Chancery in an elaborate opinion held February 15, 1905, that Spalding had "a clear right" to possession as against Lamar. Strong v. Smith, 60 Atl. 66, 68 N. J. Eq. 686. On appeal the Court of Errors and Appeals affirmed the order of the Court of Chancery August 2, 1905. 63 Atl. 493, 68 N. J. Eq. 686. The court, among other things, said:

"Of course, it is necessary that the rights of the person from whom possession is sought should, in some lawful mode be subjected to the jurisdiction of the court. Ordinarily this is done by making him a party to the suit in which the decree to be enforced is rendered. But it may be done by giving him notice of the possessory proceeding instituted on the basis of the decree or by his appearance in such proceeding. If, when he is then brought in, it is clearly shown that he claims under one who was a party to the suit and that his right of possession is undoubtedly subordinate to the right for the enforcement of which the writ of assistance is prayed, then it may be issued against him, even though technically he is not bound by the decree. Such is the situa-

Digitized by Google

tion of the present appellant and there is no reasonable ground of equity on which the court can refuse its aid to the petitioner against him."

Subsequently the case was carried by writ of error to the Supreme Court of the United States which, November 19, 1906, affirmed the judgment of the Court of Errors and Appeals. 203 U. S. 584, 27 Sup. Ct. 782, 51 L. Ed. 328. The Supreme Court in its judgment of affirmance referred to and followed Louisville & Nashville Rd. Co. v. Schmidt, 177 U. S. 230, 20 Sup. Ct. 620, 44 L. Ed. 747, where the court used the following language:

"It is no longer open to contention that the due process clause of the fourteenth amendment to the Constitution of the United States does not control mere forms of procedure in state courts or regulate practice therein. All its requirements are complied with, provided in the proceedings which are claimed not to have been due process of law the person condemned has had sufficient notice and adequate opportunity has been afforded him to defend."

Spalding did not bring his action of ejectment against Lamar in the Monmouth County circuit court until August 4, 1905, but had applied to the Court of Chancery for the writ of assistance and Lamar had appeared in opposition in the fall of 1904. The Court of Chancery, therefore, long prior to the institution of the present suit, assumed and exercised full jurisdiction over both the parties and the subject-matter. Indeed, it was not until after the decision of the Court of Errors and Appeals that the action of ejectment was commenced; Lamar still continuing in possession pending the determination of the case by the Supreme Court on writ of error. His five-year lease expired before the trial in the court below. The foregoing facts appear partly from the transcript of record and partly by the statement of counsel not only in their oral arguments but in their printed briefs in this court.

The first assignment of error is based upon the refusal of the court below to stay the trial until the final determination of the application for the writ of assistance. We shall assume, although it is not stated, that this assignment refers to a determination by the Supreme Court. The question is thus presented whether the pendency of the litigation touching the writ of assistance operated as a bar or stay either temporarily or permanently the prosecution of the action of ejectment. There is a clear statement of the principles controlling the actions of courts of co-ordinate jurisdiction for the avoidance of conflict in Farmers' Loan & Trust Co. v. Lake St. Rd. Co., 177 U. S. 51, 20 Sup. Ct. 564, 44 L. Ed. 667. The court there said:

"The possession of the res vests the court which has first acquired jurisdiction with the power to hear and determine all controversies relating thereto, and for the time being disables other courts of co-ordinate jurisdiction from exercising a like power. This rule is essential to the orderly administration of justice, and to prevent unseemly conflicts between courts whose jurisdiction embraces the same subjects and persons. Nor is this rule restricted in its application to cases where property has been actually seized under judicial process before a second suit is instituted in another court, but it often applies as well where suits are brought to enforce liens against specific property, to marshal assets, administer trusts or liquidate insolvent estates, and in suits of a similar nature where, in the progress of the litigation, the court may be compelled to assume the possession and control of the property to be affected."

Digitized by Google

We do not regard the rule as applicable to the case before us. It is true that the application for the writ of assistance had for its object the putting of Spalding in possession and the dispossessing of Lamar, and that the action of ejectment was brought for the same purpose. But the foreclosure suit proper was terminated by decree, sale and execution of sheriff's deed, and need not be considered in this immediate connection. What we have to deal with at this point is the relation between the application for the writ of assistance and the action of ejectment. Neither of them was a suit or proceeding to enforce a lien against specific property, or to marshal assets, or to administer a trust, or to liquidate an insolvent estate, nor was it, within the meaning of the rule, a suit or proceeding of a "similar nature where, in the progress of the litigation, the court may be compelled to assume the possession and control of the property to be affected." Nor was the application a proceeding whereby the land had been actually or constructively seized or taken possession of under judicial process. Nor was the maintenance of the action of ejectment calculated to produce conflict between the court below and the state courts. If Spalding ultimately failed to gain possession by the writ of assistance and succeeded in the ejectment suit no conflict of judicial authority could have resulted. Or if he gained possession under the writ of assistance and failed in his ejectment suit there would have been no conflict. So, if he should either fail or succeed in both proceedings no conflict could have arisen. The broad purpose of the rule is to prevent unseemly conflicts between courts, destructive of or detrimental to an orderly administration of justice. It is aimed against the clashing of writs or other judicial process emanating from the respective courts, and the confusion, embarrassment and practical difficulties resulting from an antagonistic assertion of authority on the part of courts or their officers touching the control and disposition of property or persons within their general jurisdiction. It is well settled that in the absence of circumstances requiring the application of the above rule, the pendency of a prior suit in a state court is no bar, temporary or permanent, to the prosecution of a subsequent suit in a circuit court of the United States between the same or different parties for the same cause of action or involving the same subject-matter. Stanton et al. v. Embrey, Adm'r, 93 U. S. 548, 23 L. Ed. 983; Gordon v. Gilfoil, 99 U. S. 168, 25 L. Ed. 383; City of Mankato v. Barber Asphalt Paving Co., 142 Fed. 329, 73 C. C. A. 439; Barber Asphalt Pav. Co. v. Morris, 132 Fed. 945, 66 C. C. A. 55, 67 L. R. A. 761; Ogden City v. Weaver, 108 Fed. 564, 568, 47 C. C. A. 485; Consumers' Gas Trust Co. v. Quinby, 137 Fed. 882, 70 C. C. A. 220; Baltimore & O. R. Co. v. Wabash R. Co., 119 Fed. 678, 57 C. C. A. 322. The crucial point in each case is whether, under the circumstances, the prosecution of the second suit during the pendency of the first involves an unseemly or improper interference with the rightful jurisdiction of the court entertaining the first suit. Where no such interference occurs or is threatened the second suit may proceed regardless of any difference of opinion between the two tribunals as to the ultimate determination which should be made as to the rights of person or of

Digitized by Google

property involved in the litigation. We know of no case similar in its facts to this. Those cited on behalf of the plaintiff in error seem to us clearly distinguishable. One of them, however (Orton v. Smith, 18 How. 263, 15 L. Ed. 393), strongly indicates that the action before us is not within the prohibition of the rule. There it was held that the courts of the United States should not entertain a bill in the nature of a bill of peace upon a title in litigation in a state court. It there appeared that Orton, having become the owner of a title-bond for the conveyance of certain land, filed a bill in the court of chancery of Wisconsin to compel the conveyance of the legal title to the land in question and that during the pendency of that suit Smith, claiming to be the owner of the land, filed in the District Court of the United States for the District of Wisconsin a bill in the nature of a bill of peace praying an injunction against Orton to restrain him from setting up his claim of ownership and thereby casting a cloud upon the title claimed by Smith. The District Court decreed in favor of Smith. The Supreme Court, after declaring that a decree on a bill of peace concludes the rights of the parties to it with respect to the title, because it should put an end to all litigation between them, said:

"If they have suits pending in other courts, on the same question of title, they must cease. This bill acts by injunction on the party—no injunction ever goes to the court having a concurrent jurisdiction of the question. The courts of the United States have no such power over suitors in a state court. But a decree on a bill of peace which does not put an end to litigation is a mere brutum fulmen. Unless the court can make a decree which it can execute, it is a sufficient reason for refusing to take cognizance of the case. It is a rule absolutely necessary to be observed by courts who have a concurrent jurisdiction, that in all cases 'where the jurisdiction of a court and the right of a plaintiff to prosecute his suit in it have once attached, that right cannot be arrested or taken away by proceedings in another court.' This rule it is said, 'has its foundation not merely in comity, but in necessity. If one may enjoin, the other may retort by injunction, and thus the parties be without remedy.' * * * If the decree in this case can be of any value whatever, let us look at the consequences which may possibly and probably will arise, in case it is enforced. * * * When the sheriff puts Orton in possession under the decree of the state court, and expels Smith, the Circuit Court, by its officer, must replace Smith, or imprison Orton for a contempt. This would, indeed, be a humiliating spectacle. Such a disreputable collision of jurisdictions should be sedulously avoided. This can only be done by refusing to entertain a bill of peace for an injunction when the title is in litigation in a court of concurrent jurisdiction; otherwise, the result of a bill of peace may be not peace but war; and, instead of dispelling a 'cloud' from the title of either party, will doubly increase the darkness and difficulty with which it was environed."

But the court also, distinguishing an action of ejectment from a bill of peace, said:

"It is true, if this were an ejectment in a court of law, the pendency of another ejectment between the same parties might not have afforded sufficient ground for a plea of auter action pendent; nor would the court have been bound, even by comity, to await the decision of the state court, or suffer the cause pending before them to be in any way affected by it."

We do not think there was anything in the present action, especially in view of the fact that the plaintiff in the ejectment was also the petitioner for the writ of assistance, calculated to delay or im-

Digitized by Google

pede the state courts in the exercise of their jurisdiction, nor to produce contention between courts, and consequently are of opinion that the first assignment of error must be overruled.

The ninth assignment is to the effect that there was error as the court below was without jurisdiction to render any judgment in the case. This assignment is covered by the considerations applicable to the first and is, therefore, overruled. The second, third, fourth and fifth assignments all relate to the existence of power in the court below to allow on the trial amendments of the bill of particulars theretofore filed by the plaintiff in order that certain evidence deemed material as bearing on title might be introduced. We have no doubt of the existence of authority in the court below in the exercise of a sound discretion to permit a bill of particulars in an action of ejectment to be amended at the trial. The plaintiff in error contends for too narrow a construction of the statutory provisions relating to the subject. Only one of the remaining assignments merits serious consideration. It is the sixth, which is based on the direction of the court below to the jury to render a verdict in favor of the plaintiff and against the defendant. As before stated, the object of both the writ of assistance and this suit was the recovery of possession of the land in question. The counsel for Lamar in his brief says:

"The sole relief prayed in this suit was the recovery of possession of the property bought at the foreclosure sale. Precisely the same relief had been prayed by the same plaintiff in his proceedings in the said court for a writ of assistance, and the state court had granted said relief. On appeal, the Court of Errors and Appeals had affirmed the order granting said relief. Spalding was therefore pursuing two distinct proceedings for the same purpose, one in the courts of the state and the other in the federal courts."

Lamar, having appeared and become a party to the proceedings for the writ of assistance and adduced evidence and been heard, had his day in court, and was regarded by the Supreme Court as well as the state courts as not having been denied due process of law as guaranteed by the Constitution. The state courts having decided that Spalding was entitled to possession as against Lamar and their decision having been affirmed by the Supreme Court, and the questions on the merits presented in this suit having been involved in the determination reached with respect to the writ of assistance, we do not feel at liberty to hold that Spalding is not entitled to possession. If the instruction given by the learned district judge to find for the plaintiff was erroneous as matters then stood it must, in view of subsequent events, be treated as harmless error. Under the circumstances the judgment of the court below should be affirmed with costs, and it is so ordered.

Digitized by Google

(154 Fed. 339.)

LYMAN v. HILLIARD.

(Circuit Court of Appeals, Second Circuit. April 30, 1907.)

No. 185.

1. COURTS—FEDERAL COURTS—STATE DECISIONS.

The decisions of the highest courts of the state interpreting a state statute, if uniform and consistent, are controlling on the federal courts; but not so as to state decisions not in construction of the particular statute in controversy.

[Ed. Note.—For cases in point, see Cent. Dig. vol. 13, Courts, §§ 956, 957.

Conclusiveness of judgment between federal and state courts, see note to Kansas City, Ft. S. & M. R. Co. v. Morgan, 21 C. C. A. 478; Union & Planters' Bank v. City of Memphis, 49 C. C. A. 468.]

2. CORPORATIONS—DIRECTORS—STATUTORY LIABILITY—ENFORCEMENT.

A Vermont statute provides that no debts shall be contracted by a corporation exceeding in amount two-thirds of the capital stock actually paid in, and that a director, assenting to the creation of an indebtedness exceeding such amount, becomes personally liable for the excess. *Held*, that the liability so imposed was for the benefit of all of the creditors of the corporation, and was therefore enforceable only by a proceeding in equity.

[Ed. Note.—For cases in point, see Cent. Dig. vol. 12, Corporations, §§ 1492, 1493.

Liabilities of corporate officers for debts and acts of corporation as dependent on knowledge or participation, see note to Folwell v. Miller, 75 C. C. A. 492.]

In Error to the Circuit Court of the United States for the District of Vermont.

See 138 Fed. 469.

Max L. Powell, for plaintiff in error.

E. H. Deavitt, for defendant in error.

Before WALLACE, LACOMBE, and TOWNSEND, Circuit Judges.

WALLACE, Circuit Judge. This is a writ of error by the defendant in the court below to review a judgment for the plaintiff entered upon the verdict of a jury. The defendant was a director of the Burlington Shoe Company, a Vermont corporation, and the action was brought by a creditor to recover a debt of the corporation in excess of two-thirds of the amount of the paid-up capital stock of the corporation, under a statute of that state which reads as follows:

"No debts shall be contracted by a corporation exceeding in amount two-thirds of the capital stock actually paid in; and a director assenting to the creation of an indebtedness exceeding such an amount becomes personally liable for the excess."

The more important question, raised by the assignments of error and discussed at the bar, is whether the cause of action is cognizable at law or in equity. The same question has arisen in many cases where statutes more or less similar have been considered by the courts. The answer to it depends upon the construction which belongs to the particular statute under consideration. If the statute creates a liability in favor of the creditors of the corporation severally, if the liability of the directors is several and irrespective of the insolvency of

Digitized by Google

the corporation, if the extent of the liability is an exact sum, or ascertainable without resort to an accounting, and is independent of the extent of the liability of the other creditors, it is one enforceable by a suit at law, because it is essentially of a common-law nature, and not of a character which can only be conveniently and justly ascertained and enforced by a court of equity. If, however, it creates a liability to the creditors jointly, or to the corporation, and the liability of the directors is joint, the cause of action is of equitable cognizance, because it contemplates the creation of a fund for the benefit of all, to which those liable are to contribute only in the just proportion of loss which each should bear, and the ascertainment of this amount is peculiarly the province of a court of equity. Several decisions of the courts of Vermont have been cited by counsel as bearing upon the question whether the remedy upon this statute is at law or in equity. None of them are in construction of the particular statute. In the interpretation of state statutes the decision of the highest courts of the state, if they are uniform and consistent, are controlling upon the federal courts, and dominate the construction to be given such statutes by the federal courts. But when such decisions are not in construction of the particular statute, although they are entitled to high respect as authorities, they are not controlling upon the federal courts. The Vermont decisions which have been cited are of this class.

It will be observed that the present statute does not in terms declare whether the assenting director is to be liable for the excess indebtedness to all the creditors, nor whether he is to be liable to the corporation. It seems to contemplate that he shall be liable for the whole excess, and if this is the meaning it cannot contemplate that he shall be liable to creditors severally for their respective debts, to the extent of the excess.

There are two decisions controlling upon this court which are so closely in point that we must regard them as decisive of the present question.

In Hornor v. Henning, 93 U. S. 228, 23 L. Ed. 879, the statutory provision was that:

> "If the indebtedness of any corporation originating under this act shall at any time exceed the amount of its capital stock, the trustees of such corporation assenting thereto shall be personally and individually liable for such excess to the creditors of the corporation."

The court held that this liability constituted a fund for the benefit of all the creditors, so far as the condition of the corporation rendered a resort to it necessary; that the liability should not be so construed that any one creditor could appropriate the whole or any part of it to his own benefit, to the possible exclusion of some or all of the other creditors; and that the remedy was appropriate to a court of equity, and could not be enforced at law.

In Stone v. Chisholm, 113 U. S. 302, 5 Sup. Ct. 497, 28 L. Ed. 991, the statute was as follows:

> "The total amount of debts which such corporation shall at any time owe shall not exceed the amount of its capital stock actually paid in; and, in case of such excess, the directors in whose administration it shall happen shall be personally liable for the same, both to the contractor or contractors, and to the corporation."

Digitized by Google

The court construed this statute as follows:

"The conditions of the personal liability of the directors of the corporation, expressed in the statute, are that there shall be debts of the corporation in excess of the capital stock actually paid in, to which the directors sought to be charged shall have assented, and this liability is for the entire excess, both to the creditors and to the corporation."

It was held that the remedy was in equity, and not at law; the court saying:

"To ascertain the existence of the liability in a given case requires an accounting to be taken of the amount of the incorporate indebtedness, and of the amount of the capital stock actually paid in—facts the directors, upon whom the liability is imposed, have a right to have determined, once for all, in a proceeding which shall conclude all who have an adverse interest and a right to participate in the benefit to result from enforcing the liability. Otherwise the facts which constitute the basis of the liability might be determined individually by juries in several actions, by which some creditors might obtain satisfaction and others be defeated. The case cannot be distinguished from Hornor v. Henning, the reasoning and the result in which we reaffirm."

In view of these adjudications, it will serve no useful purpose to refer to many decisions of state courts to the same effect, when construing statutes substantially identical to the present, as, for instance, those of the courts of Illinois, which are referred to and followed in Rice v. Libbey (C. C.) 85 Fed. 821.

Concluding, as we must, that the assignments of error based upon the objections to the jurisdiction were well taken, it is unnecessary to consider any of the other assignments of error.

The judgment is accordingly reversed.

(154 Fed. 341.)

STEPHENS v. MERCHANTS' NAT. BANK OF AURORA, ILL., et al.

(Circuit Court of Appeals, Seventh Circuit. April 16, 1907.)

No. 1,326.

1. BANKRUPTCY—INVOLUNTARY PROCEEDINGS—REVIEW ON APPEAL.

A finding by a referee, confirmed by the District Court, that an alleged bankrupt was not chiefly engaged in farming, but was amenable to the bankruptcy law, will not be disturbed on appeal where the evidence left the question uncertain on the facts.

[Ed. Note.—For cases in point, see Cent. Dig. vol. 6, Bankruptcy, § 926.]

2. SAME—RIGHT TO JURY TRIAL.

Bankr. Act July 1, 1898, c. 541, § 19a, 30 Stat. 551 [U. S. Comp. St. 1901, p. 3429], does not entitle an alleged bankrupt to a jury trial where by his answer he admits his insolvency and the commission of the alleged acts of bankruptcy but alleges that he is not amenable to bankruptcy proceedings because chiefly engaged in farming.

[Ed. Note.—Right to trial by jury in federal court, see notes to O'Connell v. Reed, 5 C. C. A. 603; Vany v. Peirce, 26 C. C. A. 528.]

Appeal from the District Court of the United States for the Eastern Division of the Northern District of Illinois.

Charles C. Buell, for appellant.

Charles V. Miles, for appellees.

Before GROSSCUP, BAKER, and SEAMAN, Circuit Judges.

Digitized by Google

GROSSCUP, Circuit Judge. Upon a petition filed January 2nd, 1906, by the Merchants National Bank of Aurora, appellee, against the appellant, charging that the appellant was then insolvent, and that he had committed various acts of bankruptcy within section three of the Bankruptcy Act of July 1, 1898 (30 Stat. 546, 547, c. 541 [U. S. Comp. St. 1901, p. 3422]) and the answer of the appellant thereto confessing that he was insolvent, and that he had committed the acts of bankruptcy, but averring that he was a person not amenable to the bankruptcy law of the United States, by reason of the fact that he was a person chiefly engaged in farming, the appellant was declared a bankrupt. Two assignments of error to this order are pressed: The first, that the court erroneously overruled the application of appellant that the question whether he was amenable to the bankruptcy act, by reason of his being a person chiefly engaged in farming, should be tried by jury, and the second, that though found by the referee, affirmed by the District Court, to be a person not chiefly engaged in farming, and therefore amenable to the bankruptcy law, such finding is so clearly against the weight of the evidence, that it ought to be set aside, and the order based thereon reversed.

Respecting the second assignment of error—an assignment based entirely upon the facts of the case—it is sufficient to say that though appellant was a farmer engaged in the tillage of thirty-five or forty acres of land, enjoying the rentals of twenty acres or more, and receiving compensation for pasturage upon seventy-five acres additional, the aggregate income from which, for the year 1905, is variously estimated, at from five hundred to thirteen hundred dollars, he was engaged also in the business of entertaining picnic parties—a business that involved a considerable outlay of money in the way of buildings, restaurant, dance hall, station house, and the like, and that carried with it for the year 1903, a current expenditure of about five thousand dollars; for the year 1904 of about three thousand dollars; and for the year 1905 about seventeen hundred dollars—a state of facts that leaves the question whether one thus engaged, and incurring constantly such liabilities independently of his avocation as a farmer, remains a person chiefly engaged in farming, one of such uncertainty (made still more uncertain by the uncertainty respecting his income as a farmer) that we feel bound to leave the determination of the referee and the District Court unmolested.

Section 19, a. of the Bankruptcy Act provides (a) A person against whom an involuntary petition has been filed shall be entitled to have a trial by jury, in respect to the question of his insolvency, except as herein otherwise provided, and any act of bankruptcy alleged in such petition to have been committed, upon filing a written application therefor at or before the time within which an answer may be filed; and upon this is based appellant's assignment of error that he was denied a jury trial.

The appellant admitted in his answer, as already stated, that he was insolvent, and that he had committed the acts of bankruptcy alleged, but insists that his right to a trial by jury extends also to the question whether he was a person chiefly engaged in farming—

Digitized by Google

the argument being that a person chiefly engaged in farming cannot commit an act of bankruptcy, wherefore the determination of whether an act of bankruptcy has been committed involves the question whether the appellant was a person chiefly engaged in farming. This argument, however, ignores the rule that in construing a statute, we must get at the intention of congress, and that in getting at the intention of congress, we must accept the rule that where things are described specifically, the section is meant to cover nothing except the things described; for the section states specifically, as a matter for trial by jury, the question of insolvency, a matter that under the rule would not have been thus separately set forth if every condition precedent to the right of the court to adjudge a man a bankrupt were included in the words "Act of Bankruptcy." Indeed "Acts of Bankruptcy" are used in this connection, as they are set forth in a preceding section of the statute, and are thus given a definite meaning. Whether one be chiefly engaged in farming or not has no relation, within this meaning, to any act of bankruptcy; but is a condition only to the jurisdiction of the bankruptcy court, and like other jurisdictional questions, is left to the court to determine in the absence of a jury, trial by jury not having been specifically provided.

The judgment of the District Court must be affirmed.

(154 Fed. 343.)

In re ROBINSON & SMITH.

WILSON v. BROCK & RANKIN.

(Circuit Court of Appeals, Seventh District, April 16, 1907. Rehearing Denied May 14, 1907.)

No. 1,325.

BANKRUPTCY—LIENS—LEVY OF DISTRESS WARRANT UNDER LEASE.

Bankr. Act July 1, 1898, c. 541, §§ 67c, 67f, 30 Stat. 564, 565 [U. S. Comp. St. 1901, pp. 3449, 3450], providing that liens obtained through legal proceedings within four months prior to bankruptcy shall be dissolved by the bankruptcy proceedings, relate only to those actions or proceedings taken by creditors who, having no existing lien or right of lien resting in existing contract entered into in good faith, seek to obtain a preference by being first in the race of diligence, and such provisions do not affect a lien obtained by a landlord by the levy of a distress warrant for past due rent under a lease giving the landlord a right of lien and to distrain for rent in arrears, which was entered into in good faith and not in contemplation of bankruptcy; such lien being one which is preserved by section 67d.

Appeal from the District Court of the United States for the Eastern Division of the Northern District of Illinois.

The appeal in this case is from an order of the District Court allowing the claim of appellees as a preferred claim against the bankrupt's estate, for the sum of seven hundred thirty-seven dollars and seventy-four cents back rent, and ordering that the trustee be directed to pay it as such preferred claim, out of the moneys in his hands.

The facts are stated in the opinion.

Digitized by Google

Elbert C. Ferguson, for appellant.
Abel L. Allen, for appellee.

Before GROSSCUP, BAKER, and SEAMAN, Circuit Judges.

GROSSCUP, Circuit Judge. The claim of appellees as allowed, accrued within four months prior to the filing of the petition against appellees, upon which appellants were subsequently adjudicated involuntary bankrupts. The claim was filed for back rent due from the bankrupts to the appellees under a lease containing this provision:

It Is Expressly Agreed between the parties herein, that if default be made in the payment of the rent above reserved or any part thereof, or in any of the covenants and agreements herein contained, to be kept by the party of the second part, it shall be lawful for the party of the first part, or the legal representative of said party, at any time thereafter, at the election of said first party or the legal representatives thereof, without notice, to declare said term ended, and to re-enter said demised premises or any part thereof, either with or without process of law, and the said party of the second part or any person occupying the same, to expel, remove, and put out, using such force as may be necessary so to do, and the said premises again to re-possess and enjoy as before this demise, without prejudice to any remedies which might otherwise be used for arrears of rent or preceding breach of covenants, and said party of the second part further covenants and agrees, that said party of the first part, or the representatives or assigns of said party shall have at all times, the right to distrain for rent due, and shall have a valid and first lien upon all the personal property of said party of the second part, which it now has or owns, or may hereafter have or acquire or have an interest in, whether exempt by law or not, as security for the payment of the rent herein reserved; together with the costs for distress warrant and custodian's fees under such provision.

The distress warrant was levied upon the personal property of the bankrupts on the leased premises two days before the petition in bankruptcy was filed. Upon the filing of the petition, the custodian under the distress warrant turned over the property to the receiver in bankruptcy, upon a receipt stating that appellees claimed to have a lien by reason of the distress warrant, which lien was, if good, to be continued without prejudice growing out of the delivery of the property to the trustee. Subsequently the property was sold for more than the claim of appellees. This is the whole of the case that we need consider, though it may be stated that on the same day that the petition for bankruptcy was filed, appellees filed in the office of the Clerk of the Superior Court of Cook County, their distress warrant, and the schedule of property levied upon, whereupon summons was issued upon Smith alone, and no answer or plea having been filed, judgment was entered against Smith alone; and that subsequently, on motion of appellees, an order for scire facias against Robinson was entered, but never served.

Section 67d (Bankr. Act July 1, 1898, c. 541, 30 Stat. 564 [U. S. Comp. St. 1901, p. 3449]) provides:

"Liens given or accepted in good faith and not in contemplation of or in fraud upon this act, and for a present consideration, which have been recorded according to law, if record thereof was necessary in order to impart notice,

Digitized by Google

And under this it has been held that a mechanic's lien is not lost by the adjudication of bankruptcy, even though the lien did not attach until notice, and the notice was filed within four months preceding the bankruptcy adjudication. In re Emslie, 102 Fed. 292, 42 C. C. A. 350 (Circuit Court Appeals, Second Circuit). Indeed, in every case in which, initially, the parties intended in good faith, that there should be a lien, or that one of the parties on the happening of an event should, at his choice, have a right of lien, the contract in which such intention is embodied being itself a contract entered into more than four months previous to the bankruptcy, the bankruptcy law preserves the lien.

The bankruptcy law contains also these provisions:

(c) "A lien created by or obtained in or pursuant to any suit or proceeding at law or in equity, including an attachment upon mesne process or a judgment by confession, which was begun against a person within four months before the filing of a petition in bankruptcy by or against such person shall be dissolved by the adjudication of such person to be a bankrupt if
was insolvent and that its existence and enforcement will work a preference,
(1) It appears that said lien was obtained and permitted while the defendant or
(2) the party or parties to be benefited thereby had reasonable cause to believe the defendant was insolvent and in contemplation of bankruptcy;
(f) That all levies, judgments, attachments, or other liens, obtained through legal proceedings against a person who is insolvent, at any time within four months prior to the filing of a petition in bankruptcy against him shall be deemed null and void in case he is adjudged a bankrupt."

And the claim of appellant is that the seizure in distress is, within these paragraphs, in the nature of a suit or proceeding in attachment, and having been begun within the four months before bankruptcy, is annulled by the adjudication of bankruptcy.

We cannot concur in this view. The whole question is one of interpretation of the Bankruptcy Act—the policy of that Act respecting the recognition of liens in the distribution of bankrupt estates. Paragraphs c and f quoted were meant, in our judgment, to relate only to those actions or proceedings taken by creditors, who having no existing lien or right of lien resting in existing contract, entered into in good faith, seek to obtain preference by being first in a race of diligence—a preference that the bankruptcy law annuls, because the purpose of that law is to substitute equality for diligence.

But the lien obtained by the distress warrant under the kind of lease involved in this case is not the result of a race of diligence. Under the lease, and the Illinois law interpreting the lease and the rights of the parties thereunder (Powell v. Daily, 163 Ill. 646, 45 N. E. 414; Atkins v. Byrnes, 71 Ill. 332) the right of lien was created when the lease was executed, and the tenant entered upon possession of the premises—a right put wholly, at that time, within the control of the landlord, and maturing the moment the landlord chose to mature it. And though it did not actually attach (as in the New York case 102 Fed. 292, 42 C. C. A. 350, supra) until within four months of the bankruptcy, it was the kind of lien, it seems to us, that section 67d was intended to preserve; for unquestionably as between the parties to the lease it was a lien, not simply because the distress warrant was actually levied, but because, by contract between them, the levy of

Digitized by Google

the distress warrant was authorized; and as against creditors, such a lien prevails from the moment it is made a matter of record or public notice, not solely because by such record or notice the lien attaches, but because, from the moment of such record or notice, the creditors are informed that the lien, or the right to such lien, had been in existence from the time that the contract authorizing it was entered into. In other words, the lien is not one that the creditor has obtained irrespective of any right or lien given him by the debtor, but wholly by resort to the judicial proceedings in law or equity that are open to all; but is a lien given directly by the debtor and accepted by the creditor, in good faith, and not in contemplation of bankruptcy—just the kind of relationship that distinguishes a lien attaching as the result of contract, from a lien springing out of some independent and adverse proceedings.

The decree appealed from is affirmed.

(154 Fed. 346.)

MEIGHAN et al. v. AMERICAN GRASS TWINE CO.

(Circuit Court of Appeals, Second Circuit. April 30, 1907.)

No. 290.

ATTORNEY AND CLIENT—ATTORNEY'S LIEN—STOCKHOLDERS' SUIT.

Under Code Civ. Proc. N. Y. § 66, as amended in 1879, which gives an attorney a lien upon the cause of action of his client, which attaches "to the proceeds thereof in whosesoever hands they may come," and which may be enforced by a suit in equity against the client or any party holding the proceeds, the attorneys for a stockholder in suits brought on behalf of all the stockholders against certain directors of a corporation to compel them to account for and pay over to the corporation the amount of illegal dividends declared and paid by them from the capital, as a result of which defendants paid over a large sum to the corporation, are entitled to a lien on such fund for their services, and may enforce the same by a suit in equity against the corporation.

[Ed. Note.—For cases in point, see Cent. Dig. vol. 5, Attorney and Client, §§ 400, 426.]

Appeal from the Circuit Court of the United States for the Southern District of New York.

John A. Garver and Shearman & Sterling, for appellants.

G. W. Murray, Charles P. Howland, and Howland, Murray & Prentice, for appellee.

Before WALLACE, LACOMBE, and TOWNSEND, Circuit Judges.

WALLACE, Circuit Judge. This is an appeal from a decree dismissing the bill of complaint in an equity suit brought by the complainants to enforce a lien for their services as attorneys upon certain moneys in the hands of the defendant, the American Grass Twine Company. The decree was ordered upon sustaining a demurrer to the bill of complaint.

By a statute of this state (Code of Civil Procedure, § 66, as amended in 1879), from the commencement of an action "the attorney who ap-

Digitized by Google

pears for a party has a lien upon his client's cause of action * * * which attaches * * * to the proceeds thereof in whosesoever hands they may come." This lien is an equitable one, and may be enforced by a suit in equity against the client or any party holding the proceeds, and cannot be affected by any settlement between the parties to the action. Peri v. N. Y. C. Ry. Co., 152 N. Y. 521, 46 N. E. 849; Fischer-Hansen v. Brooklyn Heights R. Co., 173 N. Y. 492, 66 N. E. 395. This court has recently had occasion to consider this statute in Re Baxter & Co. (decided February 28, 1907) 154 Fed. 22. Under these decisions it is plain that the bill of complaint sets forth a good cause of action in equity, and the demurrer thereto should not have been sustained by the court below, if the lien sought to be enforced by the complainants was upon a cause of action of the client for whom they appeared. It appears that they prosecuted nine actions brought by Watkins, a stockholder of the defendant corporation, against certain directors of that corporation who had participated in the declaration and payment of unlawful dividends to stockholders, made before Watkins became a stockholder; the dividends having been declared and paid out of the capital, and not out of earnings. The corporation having refused to take any action to secure the restoration of these illegal dividends, the nine suits were brought by Watkins, in behalf of himself and all other stockholders of the corporation, to compel the directors to account for and pay over to the corporation the amount of these dividends by which its capital had been impaired. Shortly after the beginning of these actions, and "as a result thereof," as the demurrer admits, the directors who were the defendants therein paid directly to the corporation the sum of over $642,000.

It is argued that the cause of action in these suits was not that of Watkins, the plaintiff therein, but was that of the corporation. Theoretically this is true, but in a substantial and legitimate sense it is not true. If the directors, instead of paying this money to the corporation, had paid it into the hands of the complainants, the attorneys who brought the actions, is there any fair doubt that these attorneys would have had a lien upon it, and that they would not have been under any duty to pay it over to the corporation without satisfaction of their lien? If it had been paid into court, is there any fair doubt that the court would not have allowed it to be paid out without satisfaction of their lien? These questions are sufficiently answered in Re Paschal, 10 Wall. 483, 19 L. Ed. 992, and Matter of Knapp, 85 N. Y. 284, without reference to any other authorities.

But, suppose the cause of action was that of the corporation; the plaintiff in these nine actions asserted for it and in behalf of its stockholders a claim which the corporation was unwilling or unable to assert itself, because its directors controlled its action. He may justly be regarded as, pro hac vice, the corporation itself, and the attorneys who represented him may be regarded as representing it. A case involving the same general considerations was decided in Grant v. Lookout Mountain Co., 93 Tenn. 691, 28 S. W. 90, 27 L. R. A. 98. In that case a lien for attorney's services was claimed upon a fund recovered in a suit brought by minority stockholders against the cor-

Digitized by Google

poration. The court held that, such recovery inuring to the benefit of the corporation, the suit was to all intents and purposes a suit of the corporation, and the corporation was responsible for proper and reasonable counsel fees incurred by the stockholders in the prosecution of the suit.

The defendant has obtained a large sum of money by the aid of the professional services of the complainants in prosecuting the nine suits, and the demurrer admits that this money was paid to and received by the defendant "in full satisfaction and settlement of the cause of action in the said nine complaints and the liability upon which the said actions were brought." It does not lie in its mouth to say that in performing these services the complainants did not represent the corporation and act as its attorneys.

It is argued in support of the decrees below that the right to a lien has been determined adversely to the complainants by the courts of this state in Matter of Meighan, 182 N. Y. 558, 75 N. E. 1131, affirming the Supreme Court in 106 App. Div. 599, 94 N. Y. Supp. 1153, and that this court should yield to the authority of these decisions in a question concerning the construction of a state statute. These cases arose upon a summary application, and it is quite impossible to determine whether the decisions turned upon any construction of the statute. The original decision went upon the ground that the money had never been in the possession or under the control of the court, and it therefore could not be reached by a summary proceeding, and also upon the ground that the petitioners' client was primarily liable for their compensation, and a lien against the opposite party would not be enforced without allegations of insolvency. In each case the reviewing court affirmed the order of the court below without any opinion, but in both there were dissenting opinions in which the attorneys were considered entitled to a lien. In the absence of anything to indicate the views of the majority of the court in either of these cases, we are uninformed as to the points upon which they agreed, and cannot regard the decisions as giving us any light upon any question which we are called upon to decide.

The decree is reversed, with costs, and with instructions to the court below to overrule the demurrer, with leave to entertain an application to answer.

(154 Fed. 348.)

THE FURNESSIA.

(Circuit Court of Appeals, Second Circuit. April 30, 1907.)

No. 216.

COLLISION—STEAM AND SAILING VESSELS CROSSING—ERROR IN EXTREMIS.

A collision at sea on a foggy night between a schooner and a steamship on crossing courses was brought about primarily by the fault of the steamer in maintaining an excessive speed in the fog, and not keeping an efficient lookout, in consequence of which she was close upon the schooner before she saw her or heard her fog signals. Just prior to the collision, the mate of the schooner took the light from the binnacle and placed it on top of the house, where it was mistaken by the steamer for the stern light of an overtaken vessel, in consequence of which the

Digitized by Google

steamer ported when she should have starboarded, and thus made collision certain. *Held*, that such act of the mate did not render the schooner liable as for a contributory fault, because it was done in extremis, when the steamer was bearing down directly upon the schooner at high speed, apparently without seeing her.

[Ed. Note.—For cases in point, see Cent. Dig. vol. 10, Collision, §§ 225–229.

Collision rules, speed of sailing vessels in fog, see note to The Mount Hope, 29 C. C. A. 368.]

Appeal from the District Court of the United States for the Southern District of New York.

The cause comes here upon cross-appeals from a decree of the District Court, Southern District of New York, holding the steamer Furnessia solely in fault for a collision with the schooner William Bisbee. The steamer appeals on the merits, and libelants upon the assessment of damages. The witnesses on the merits were all examined out of court. The collision happened about 1:45 a. m. May 15, 1904, in the Atlantic Ocean, some 15 miles east of Fire Island lightship. The opinion below is reported in 137 Fed. 955.

Henry G. Ward, Wm. S. Montgomery, and Robinson, Biddle & Ward, for claimant.

W. U. Taylor and MacFarland, Taylor & Costello, for libelant.

Before WALLACE, LACOMBE, and TOWNSEND, Circuit Judges.

LACOMBE, Circuit Judge. The steamer was on a course W. by N. two degrees N. The schooner in charge of her mate, who was at the wheeel, was on the starboard tack, heading nearly northeast, with a very light wind from the eastward. She at no time changed her course. The steamer struck her a right-angled blow. Therefore before collision the steamer must have changed her course nearly four points. The weather was foggy. Fog whistles were sounded by the steamer, and the schooner was working her mechanical fog horn. The District Court held the steamer in fault for going at too great speed in a fog, and in not having sufficient lookouts. She does not contest the correctness of this finding. As was to be expected, the powerful electric lights (masthead and colored) of the steamer were visible to those on the schooner before her own lights could be made out by those on the steamer. Exactly what lights were first seen by the schooner is by no means certain, although both mate and lookout insist that they first saw the masthead and green light. We find it impossible to reconcile such a statement with the known courses of both vessels, prior to the change of course which the steamer made later, when she made out the presence of the schooner. But, whatever lights were seen, the schooner obeyed the rules in maintaining her course and speed unchanged until the crash came.

The district judge says:

"The difficult question in the case is concerning the exhibition of an irregular light by the schooner. When the steamship's presence became known to those on the schooner, the mate, who was then in charge and steering her, took the light out of the binnacle and set it on top of the house, where it

Digitized by Google

remained until nearly the time of the collision, when it was put back in the binnacle. The mate explains this by stating that he was afraid of steamers, and always used this precaution. It was very bad practice on his part, and, if it had any effect in producing collision, the vessel should be condemned for it. The steamship claims that she supposed that the light was one of an overtaken vessel shown in conformity with article 10 of the sailing rules."

He excused the schooner (1) because it was doubtful whether the steamer changed her course, by reason of the misleading light, sufficiently to bring about collision; and (2) because the exhibition of that light was in the extremity of collision.

In the first of these propositions we are unable to concur. There is no testimony and no conceivable reason why the steamer should have changed her course before she saw the schooner's light. She had laid her compass course at Nantucket lightship for Fire Island lightship, and only the presence of some other vessel to be avoided would have induced a departure from it. The light first seen was a white light a little on the port bow. The captain and the second and fourth officers, all on the bridge, so testify. The lookout in the crow's nest (called by libelants) says that he heard the lookout at the bow report "light on the port bow," and soon thereafter he himself saw a white light right ahead. All of these witnesses saw a green light a little later, but the helm had been already ported in the belief that the white light was displayed by an overtaken vessel. One witness only, the lookout in the bow, also called by libelant, testified that he first saw a green light on the port bow. His evidence is unpersuasive. When confronted with a contradictory statement which he had signed, he sought to explain it away by saying that he was drunk when he signed it. This explanation was disproved by several persons who were present at the time. Moreover, he insists that he warned them on the bridge by singing out that "he had better put his helm hard down, otherwise he would go right into the schooner." If he did see a green light a little on the port bow or about ahead, this was a manoeuvre certain to produce disaster. Further questioning apparently warned him of the effect of this testimony, for he states that by "hard down" he meant "hard astarboard." Since the wind at the time was coming over the starboard quarter, the explanation is a lame one, and we think his whole testimony entitled to no credit. It seems to us well established that the white light did mislead the steamer, and that if she had not ported to pass it, but had made no change till the green light became visible, she could then have starboarded and passed in safety.

With some doubt, however, we concur in the conclusion that the exhibition of the binnacle light is to be excused because it was in extremis. Counsel for the steamer contends that there are serious contradictions in the testimony of the mate of the schooner; but, upon a careful analysis of the evidence, we think they are more apparent than real, and are satisfied that he did not exhibit the binnacle light till just as he called the captain, when for some little time the steamer, showing her mast-head and red light and some lights through the dead lights on her port side, was bearing down on him apparently unconscious of the schooner's proximity. There are sufficient instances

Digitized by Google

in the reports of steamers navigating the North Atlantic in fog at a rate of speed too great to enable them to discover the presence of privileged vessels in time to avoid them to insure the court's appreciation of the mate's remark, "Every time I see a steamer, I think she is going to run into us." No antecedent fault on the part of the schooner had produced the perilous situation. She was sounding her fog horn, a good one, and kept her course and speed until the end. The apparent risk was induced by the fault of the steamer in running in a fog so thick (as the second officer says) that a light could not be seen until less than the ship's length away, and at a rate of speed so high that she was almost on top of the schooner before her navigators heard the fog horn. Under these circumstances, we are not inclined to hold the schooner in fault because the mate, terrified in the presence of impending peril, lost his head so completely as to do the one thing which made the threatened catastrophe certain.

As to the damages the commissioner has followed the authority of La Champagne (D. C.) 53 Fed. 398, which lays down the rule to be followed in similar cases. As to minor criticisms of his findings, we concur with the district judge that they are without merit.

The decree is affirmed, with interest; but, since both sides appealed, without costs of this appeal.

(154 Fed. 351.)

ERIKSSON v. GOODWIN et al.

(Circuit Court of Appeals, Second Circuit. April 30, 1907.)

No. 245.

NEGLIGENCE—DEFECTIVE CAR COUPLING—FAILURE TO INSPECT.

A train of cars loaded with sand and operated by defendants was being backed upon a pier for the purpose of dumping the sand into a scow which was hired by defendants, when the coupling between the locomotive and the first car broke, and the cars ran by their acquired momentum with such force against the bumper at the end of the track that the end car mounted the bumper and spilled its load upon the scow, injuring libelant, who was the wife of the owner and rightfully on the scow and at the place where the injury occurred. The evidence tended to show that the breaking of the coupling was due to improper handling of the cars by the engineer or to its defective condition. *Held* that, in either case, the defendants were chargeable with negligence, which rendered them liable for the injury, in the absence of any evidence to show the condition of the coupling, or that it had been recently examined to ascertain whether it was safe for ordinary use.

Appeal from the District Court of the United States for the Southern District of New York.

W. J. Martin and John F. Foley, for appellants.

Nelson Zabriskie and Hyland & Zabriskie, for appellee.

Before WALLACE, LACOMBE, and TOWNSEND, Circuit Judges.

PER CURIAM. As the witnesses in this case were examined in the presence of the district judge, and his conclusions upon the facts depend wholly upon the weight he gave to their testimony, and his opin-

Digitized by Google

ion of their credibility and intelligence, the case is not one in which it would be proper for the court to interfere with his findings of fact.

The libelant is the wife of the owner and master of a scow boat, and resided with him upon the boat, and, while the boat was receiving a load of sand from the appellants at their dumping trestle, she was injured by being struck with part of a car load which was prematurely dumped, and fell upon the place on the scow where she happened at the time to be, instead of the part of the boat where the sand ordinarily would have been dumped. The scow was in the usual place, under the dumping trestle, and was there by the implied invitation of the appellants who had been loading it with sand, and, after it had been loaded and had carried away its loading several times, her husband had returned for another load. Customarily the sand was brought to the dumping trestle by a train of cars belonging to the appellants and operated by their employés, and, when one of the cars was brought into the proper position, it was dumped from the side against a shield, and thus the sand was directed and thrown into the scow below. On the occasion in question the train consisted of six loaded cars attached to a locomotive which was backing them to the dumping place, and, when the train was some little distance away, the coupling between the locomotive and the car to which the locomotive was attached gave way, and the train by the momentum which it had previously acquired ran with such force against the bumper at the rear of the track and dumping place that the front car mounted the bumper, and spilled its contents on the boat below. If the coupling had not given out, the locomotive could have so regulated the movement of the train as to bring the cars safely into the proper position for being dumped.

The only question in respect to which there is any fair doubt is whether the district judge should have found the appellants guilty of negligence. The libelant was properly upon her husband's scow, and all those who were properly upon it were there upon the implied promise of the appellants to use reasonable care that they should not be subjected to any unnecessary danger during the loading operations.

The evidence indicates that the coupling gave way, either because it was so defective that it was unsafe for ordinary use, or because the engineer shut off the steam of the locomotive too abruptly. If the coupling was unsafe for ordinary use, and liable to break, although not subjected to any unusual strain, the appellants knew or were bound to know that it might give out at a critical time and under conditions similar to those in the present case. They were also chargeable with knowledge that, if it should give out under such circumstances, the safety of the persons upon a boat under the dumping place would be more or less jeoparded. Consequently they were under the duty of exercising ordinary care to ascertain whether it was in a reasonably fit condition for use upon the occasions when its use was required. No evidence of the slightest value was offered by them to show the previous condition of the coupling, or how long it had been in use, or that there had been any recent examination of it to ascertain whether it was safe for ordinary use. If it broke without being subjected

Digitized by Google

to any extraordinary strain by the act of the engineer in shutting off the steam of his engine too abruptly, the presumption is that it was not fit for ordinary use. On the other hand, if the coupling gave way because of the carelessness of the engineer, the defendants were liable because his negligence is to be imputed to them. Whether the accident happened from the one cause or the other, or from the combination of both, we think negligence was sufficiently established.

The judgment is affirmed, with interest and costs.

(154 Fed. 1.)

UNITED STATES v. LUEDER.

(Circuit Court of Appeals, Second Circuit. February 1, 1907.)

No. 126 (3,339).

1. CUSTOMS DUTIES—TREASURY REGULATIONS—POLARISCOPIC TEST.
   Under the general authority conferred by section 251, Rev. St. [U. S. Comp. St. 1901, p. 138], the Secretary of the Treasury promulgated regulations for ascertaining the polariscopic test of sugar drainings. *Held* that, where these regulations were substantially followed by the government polariscopists, the findings by those officers are conclusive.

2. SAME—SUGAR TEST—FRACTION OF DEGREE—DE MINIMIS, ETC.
   In determining whether sugar drainings should be classed under a tariff act as "not above fifty-six degrees" by the polariscope, or as "fifty-six degrees and above," *held*, that the rule of de minimis non curat lex does not apply to drainings testing 56.025, so as to require their classification under the former provision as testing 56, by disregarding the fraction of a degree.

Appeal from the Circuit Court of the United States for the Southern District of New York.

For decision below, see (C. C.) 146 Fed. 149, affirming a decision of the Board of United States General Appraisers, which had reversed the assessment of duty by the collector of customs at the port of New York on merchandise imported by A. Lueder.

The majority and dissenting opinions of the Board of General Appraisers read as follows:

Waite, General Appraiser. The merchandise in question consists of sugar drainings, upon which duty was assessed at the rate of six cents per gallon under the provisions of paragraph 209 of the act of July 24, 1897, c. 11, § 1, 30 Stat. 168 [U. S. Comp. St. 1901, p. 1647]. The rate of duty to be assessed is determined by polariscopic test. If the test indicates more than 56° the duty should be assessed at six cents per gallon; if not, it should be assessed at three cents per gallon. The only question here is one of fact, as to what the test actually was at the time the goods were imported.

The goods were entered on February 1, 1901, and unloaded about the 19th of February. Samples were taken on the 19th, and tests made at different times from the 21st of February, 1901, to some time in 1902. The test used as the basis for assessing the duty was arrived at by averaging a number of tests, and showed 56.025°. Thus it will be seen that the reading was carried to one-fortieth of a degree. It is undisputed that drainings, after fermentation commences, show a higher reading by the polariscope, and that this in-

Digitized by Google

crease continues during fermentation, and after fermentation ceases it returns to its normal state. The evidence indicates that the tests relied upon by the government were taken after fermentation had commenced, as the tests seem to have increased for a period after samples were taken, and then fallen away again until they indicated a condition considerably below 56°. We are of opinion that the first tests taken by the government were more nearly correct than subsequent ones, and there was no occasion for taking the third test. Besides, tests made by other competent polariscopists indicate that the test relied upon was erroneous. Hence we conclude that the duty should be assessed as upon drainings showing a test of 56° or under.

The protest is therefore sustained and the collector's decision reversed, with instructions to reliquidate the entry accordingly.

De Vries, General Appraiser (dissenting). The sole question here is the true polariscopic test of certain sugar drainings. They were assessed for duty at the rate of six cents per gallon, as testing 56° and above by the polariscope, and are claimed to be dutiable at the rate of three cents per gallon, as testing not above 56° by the polariscope, under the provisions of paragraph 209 of the act of July 24, 1897 (30 Stat. 168, c. 11, § 1 [U. S. Comp. St. 1901, p. 1647]) which, in so far as pertinent, is hereinafter quoted. The undisputed facts shown by the record and testimony may be epitomized as follows:

(1) The merchandise was imported per Vala, which arrived at the port of New York January 31, 1901. This merchandise was entered for consumption February 1, 1901, and the following note made on the entry: "The within cargo damaged by water and a large quantity of molasses found and landed in 220 packages, February 18, 1901."

(2) February 21, 1901, tests were made at the government laboratory of samples of the 220 packages of drainings. The examining officer on that day took from the drainings the requisite quantity for samples, intermixed the same, and sent to the laboratory one regulation can thereof. This was divided into two parts in the laboratory and each part tested by a different expert, with the results that one part showed a polariscopic registration of 55.9° and the other 56°, with the average of 55.95° as the accepted test of that sample, all of which was duly certified to and recorded by the said examiner. On the same day the second can forwarded to the laboratory and likewise treated and tested and the results certified and recorded as 56.1°, 56.1°, average and accepted test of sample, 56.1°. The average of the two accepted tests (55.95° and 56.1°) was then taken as the true test of that sample of the drainings, and due notice thereof given to the importer.

(3) No application was made by the importer within the required two days under the provisions therefor in article 1372, Customs Regulations, 1899, providing: "Should the importer, within two official days after such notice has been sent to him by the appraiser, claim an error in the test so reported and request a retest of any mark or portion of a mark, such retest may be granted. * * *" The following article of said regulations is pertinent and provides: "1373. In case of retest, the test upon which sugar shall be classified shall be the original test unless such test is higher than the retest, in which case the retest, or the average of the test and retest, shall be taken as the basis of classification, whichever is shown to the satisfaction of the appraiser to be the correct test." On March 1, 1901, however, many days after time required, the importer filed a request in writing for a retest of the drainings in question, upon which the examiner, however, acted, and a retest was on March 2, 1901, made pursuant to the regulations with the following results: The first can tested 57° and 57.1°, average and accepted test of the can 57.05°; the second can tested 56.6° and 56.7°, average and accepted test of that can 56.65°, which was duly certified to and recorded by the examiner with the average of tests for the accepted test of the "retest" sample 56.85°. A further test was made in response to complaint of the importer on March 7, 1901, of one sample can resulting in 57° and 57°, with an average and accepted test of 57°.

Counsel for importer in his brief contends that the first can, which was but one-half of the first sample, tested at the government laboratory, resulting in 55.9° and 56°, with an average of 55.95°, was the "test" of the drainings, and

Digitized by Google

the second can, which was the other half of that sample, giving the result of 56.1° and 56.1°, with an average of 56.1°, was a "retest," and that under article 1373 of the regulations quoted the former should be accepted as the actual test. I do not concur in this view. It required both of these cans to be tested and the average of the accepted tests of each to comply with the regulations for the first test. Moreover, importer had not as yet filed his request for a "retest," and the retest in compliance therewith was subsequently made. The "retest" contemplated by the regulations (article 1373) is that made upon application of the importer as prescribed in the preceding article thereof (1372), and the test of a single can or part of a sample made by the laboratory at the instance of the examiner is not within purview of that regulation.

(3½) On November 21, 1901, a test made under the supervision of this board in the government laboratory showed a polariscopic result of 52.6°; second, 52.8°; average and accepted test, 52.7°.

(4) February 23, 1901, samples of these drainings were tested by Sherer Bros., chemists, of New York, who returned that they tested by the polariscope 54.7°, and a member of that firm testified that a very recent test of the same sample showed only 50°.

(5) February 28, 1901, samples of the drainings in question were tested by Sharples & Bennett, chemists, New York, who returned them at the polariscopic test of 53°. On March 4, 1901, a subsequent test by the same firm of the drainings was returned at 52.6°.

(6) It appears that the drainings, when examined by Mr. Sherer at least, were and had been undergoing fermentation; that that state usually lasts about 10 days; that its effect is to first raise the polariscopic test and then resume the normal, unless it continues to attack the sugar, in which case it reduces all the sugar to alcohol. It does not appear satisfactorily whether or not these drainings were undergoing fermentation at the time imported, nor when such fermentation commenced, and only by inference whether or not it ceased.

(7) It appears from the importer's witnesses that chemists are not able to read the polariscope within from .2 to 1 degree of one another, and that in molasses they sometimes vary 2 or 3 degrees in a test, and that commercially about .5 of 1 degree is allowed in both sugar and molasses test for such variations; that the government regulations are different in their requirements from the commercial tests, and Mr. Sherer stated: "If I had followed the government articles, I would probably have got my readings .3° to .4° higher than I did."

(8) Subsequent tests made by A. Weichert, April 10, 1902, showed 52°; by G. Grund and Charles F. Judd, April 11, 1902, showed tests of 54.8° and 55°, respectively. The applicable provision of law is as follows: "209. Sugars * * * concrete and concentrated molasses, testing by the polariscope; * * * molasses testing above forty degrees and not above fifty-six degrees, three cents per gallon; testing fifty-six degrees and above, six cents per gallon; sugar drainings and sugar sweepings shall be subject to duty as molasses or sugar, as the case may be, according to polariscopic test." Regulations were duly promulgated by the Secretary of the Treasury under authority of law (section 251, Rev. St. [U. S. Comp. St. 1901, p. 138]) for the enforcement of this act. Among other things they provide:

"Art. 1362. Raw or unrefined sugars not above No. 16 Dutch standard in color shall be separated by the experts in the examining room according to the marks, and the samples of each mark shall be thoroughly mixed together, reducing if necessary by quartering, until the proper amount is secured for the general sample. From such general sample two round tin sample boxes of uniform size, made to contain not less than 1 pound each, shall be closely packed full of sugar, and transmitted forthwith to the laboratory for polariscopic test. The boxes must be so made as to be practically air-tight when closed. The samples of a mark first sent to the laboratory shall be known as 'first samples,' and shall be so entered in the record of tests as hereinafter provided."

"Art. 1364. In conformity with the principles of commercial usage and in order to secure correct results in the testing of sugars for the assessment of

Digitized by Google

duty, it is directed that at least two tests shall be made of each sample of sugar sent to the laboratory and of its several products, as specified in the law, except molasses polarizing more than 2° above or below 40 or 56 degrees; and the test which shall be accepted for the classification of a mark shall be an average of tests as hereinafter provided, such averages to be carried to five places of decimals when called for by the figures.

"Art. 1365. Samples sent to the laboratory as provided in articles 1362 and 1363 shall be carefully mixed. Sugars containing hard lumps not readily crushed and mixed by hand must be mixed in a mortar or by other adequate means. After thorough mixing, the respective samples shall be divided into two equal portions, each of which shall be tested by different experts. Should the results of the two separate tests of a sample so made correspond within three-tenths of 1° the average of the two shall be accepted as the test of such sample."

"Art. 1368. The tests of the two samples of a mark first sent to the laboratory, having been duly reported, shall be permanently entered in the record of tests according to their serial numbers, respectively, together with the accepted test of each sample, determined in manner as hereinbefore provided. Should such accepted tests correspond within five-tenths of 1° the average of the two shall be taken as the true test of the sugar."

"Art. 1372. When the test of the sugar has been determined as provided in articles 1364 to 1370, both inclusive, the appraiser shall immediately notify the importer, by messenger when practicable, of such test. Should the importer, within two official days after such notice has been sent to him by the appraiser, claim an error in the test so reported and request a retest of any mark or portion of a mark, such retest may be granted, provided, on evidence furnished, such claim shall appear to the appraiser to be well founded; but in no case shall a retest be granted when the error claimed is shown to be less than four-tenths of 1°. Samples for retest shall be made up from the reserved portion of the mark and shall be treated in all respects as provided for original tests.

"Art. 1373. In case of retest, the test upon which the sugar shall be classified shall be the original test unless such test is higher than the retest, in which case the retest, or the average of the test and retest, shall be taken as the basis of classification, whichever is shown to the satisfaction of the appraiser to be the correct test."

An examination of the facts found in connection with the regulations cited shows that the examiner substantially pursued these regulations in determining the polariscopic test of the drainings in question. The one deviation, if any, was the fact that the second can of samples was sent to the laboratory after the examination of the first. Both examinations were made, however, during the same day, and the samples were intermixed before being placed in the can, and two examinations of each sample were made in the laboratory and the averages duly made as prescribed by the regulations. The importer urges two contentions in support of his protest: First, that the polariscopic test by the government official is high, and that the polariscopic tests made by the importer's chemists show a lower degree; and, second, that the degree of the test above 56° returned by the government experts is so small that the actual polariscopic test becomes a matter of doubt, which doubt should be resolved in favor of the importer. I fail to see how the evidence in this record tends to the establishment of the claim that the test found by the government officials is erroneous, or indeed involved in doubt. I do not believe it is within the discretion of the examining officials, under the regulations of the department, to disregard a fractional registry above 56° in such cases. Not, at least, unless error in reading is clearly established. An applicable provision of law similar in principle has been construed by this board in G. A. 1795 (T. D. 13,483). In that case the statute the subject of construction was paragraph 353 of the act of 1890, which levied duty on "stockings, hose, etc., valued at more than sixty cents per dozen pairs and not more than two dollars per dozen pairs," etc. The valuation placed upon them was 60 cents and a quarter of a mill per dozen pairs. The importers contended that this small fraction of a mill was so insignificant that it ought not to enter into the computation of values. The board said: "There are cases where the law disregards the

Digitized by Google

fractional part of a day in computing time, but the principle upon which such cases rests has no application to computations of value; nor does the maxim 'De minimis lex non curat' apply, in our judgment. The language of the paragraph in question is 'more than sixty cents,' and on reflection we can perceive no reason why a fraction of a cent in value over a specific sum should not be construed to mean more than such sum." Moreover, it appears from the reading of the regulations that fractions of a polariscopic registration even to the ten-thousandths of a degree shall be regarded. The latter part of article 1364 reads: "Art. 1364. * * * And the test which shall be accepted for the classification of a marking shall be an average of tests as hereinafter provided; such averages to be carried to 5 places of decimals when called for by the figures." In my judgment, the unmistakable intent of that provision of the regulations is that in determining the polariscopic test and what is more than 56° polariscopic test, the calculations shall be carried to 5 decimal places; and evidently, when that calculation shall, within the radius of 5 decimal places, produce a fraction which reads above 56°, it shall be observed by the examining officers and become the accepted test. In the case at hand the calculations showed that at the second decimal figure a fraction was present above 56°. I do not see how, in the presence of such a regulation, we are at liberty to disregard the fractional part of the test which comes plainly within the purport and intent of the applicable and unimpeached regulations. It must be borne in mind the duty of impeaching the return of the collector is upon the importer, upon whom rests the burden of proof in the case. The evidence offered by the protestant is in every wise reconcilable with the correctness of the government test, and hence does not disprove it. It would seem from the facts found and the record that the polariscopic test of drainings varies from time to time. Particularly is this true where fermentation has set in. But there is nothing in the record which shows when fermentation set in, and when it ceased. The rate of duty levied upon sugar drainings is a specific rate. The condition of the drainings for assessment purposes in such cases is the condition in which they were when imported.

It appears from the record that the vessel arrived at the port of New York on January 31, 1901, that the merchandise was unloaded February 18, 1901, and that the first test by the government officials was made on February 21, 1901. Evidently this was as soon as practicable after importation. It will be noted also that this test was the most proximate one to the date of the actual importation of the merchandise; that the next proximate test was that made by Mr. Sherer—a recognized and competent chemist of experience in determining polariscopic tests of sugar and drainings—on February 23, 1901, which showed 54.7°. This is the most exact evidence, and to my mind the most reliable offered in disproof of the correctness of the tests by the government officials. It was made two days after the government tests and from a different sample. The other tests by the importer were many days subsequent. The degree of thoroughness of that test is not shown by the record. It resulted, however, in a difference of 1.325° from the accepted test of the government by the standard of which the drainings in question were assessed. Mr. Sherer, however, testified (and he was a witness for the importer) that chemists were not able to read the polariscope within 1° to 2° of one another. He further testified that his method of testing such differed from the government's method, and that had he tested the drainings in accordance with the regulations of the government his test would have shown three or four tenths of a degree higher. I do not think this is sufficient evidence, or evidence which, to any material extent, rebuts the return of the government examiner as to the correct test of the drainings in question. The examiner returns 56.025°. Mr. Sherer returns 1.325° less than this. He testifies that had he pursued the government's regulations his test would have been three to four tenths of a degree higher, and that different chemists will read the polariscope from 1 to 2 degrees differently.

In my judgment this does not establish that the government test was erroneous. On the contrary, its absolute correctness is perfectly harmonious with this return, under the testimony of Mr. Sherer. Indeed, his testimony, to my mind, rather conduces to the correctness of the government's test. For, if it be true that different chemists will read the polariscope from 1° to 2°

Digitized by Google

in sugar and 3° in molasses differently, we could no more say that Mr. Sherer was right than that the government was right, and that the tests made by two different persons differ to the extent of 1.325° no more than establishes Mr. Sherer's proposition to wit, that different persons read the polariscope differently, and one is as likely to be correct as the other. The burden being upon the importer to disprove the correctness of the government return, this evidence, in my opinion, fails to do so. But, two experts have read the polariscope and averaged their results in order to establish the government's test, while there is no evidence in the record of such proof of dual calculation on the part of Mr. Sherer; and it is, therefore, more probable that the government test, which is the average of the reading of two experts, be true than that of Mr. Sherer alone. At most, it only establishes the proposition that different chemists, by reason of visual differences, read the polariscope differently. It may be accepted as true and still be perfectly consistent with the government's test being absolutely accurate. In my judgment, the force of the testimony of Messrs. Weichert, Grund, and Judd is subject to the same considerations. The examinations were made from the same sample within one day of each other, and returns made of 52°, 54.8°, and 55°, at a time almost three months after the importation of the goods. Under the testimony given they are perfectly reconcilable with the correctness of the government return and in no wise disprove it.

It is equally important in the determination of tariff duties by any test, such as the polariscopic test, to have the various tests made uniform as well as exact. To establish a uniformity in the reading of the tests of sugar by the various experts at the different ports in the United States, the government regulations provide for a constant interchange of tests of the same materials in order that they may compare one with the other, their accuracy and uniformity of readings, and that duties may be uniformly levied at the different ports. See Customs Regulations, 1899 (articles 1382 to 1386, inclusive). It is of equal importance to have the tests made of the various importations at the same port uniform a well as exact. Granting that the government's expert's readings may be different from that of some other expert, if all of the tests are made by the same expert there is uniformity of results and of duties levied. If, however, the test to be arrived at is in one case determined by taking the average of the tests made by the government's experts and the test made by some chemist not in the government service, introduced to raise a doubt as to the accuracy of the government's return, as is here done, and the duties levied upon another cargo in another case are to be levied at a rate determined by a test made by the government chemists averaged with a test of another or second chemist not in the government employ introduced for the same purpose, the uniformity of tests and of duties upon sugar at that port, as well as other ports, would at once be destroyed. This must be admittedly true where there is a visual difference in readings.

I think that where a law is enacted providing that the rate of duty on sugar shall be governed by a mechanical, to wit, polariscopic test, and Congress has committed to the Treasury Department the power to make regulations to govern the same, and that department to that end has promulgated regulations and has therein confided to two or more examiners at each port the determination of this test, uniformity and accuracy are as nearly secured as practicable. And while it may be true, as in this case, some hardship may be wrought in specific instances, I do not feel justified in subscribing to a principle which in my judgment will become authority in future cases which may result in admitting to any port sugar the test of which for dutiable purposes has been made other than in a substantial pursuance of government regulations.

The regulations provide for the ascertainment of the polariscopic test by two government experts conducting a series of tests calculated to arrive at proximate accuracy. These have been pursued. To say that the tests of other experts shall be held to establish a doubt and to that end be made the subject of average with the government tests introduces new experts into the government service, practically appoints others than the duly appointed officers for that purpose, disregards the findings of those officials charged with that duty, and recognizes methods of procedure in determining tests that are admittedly

Digitized by Google

at variance with those only prescribed. Certainly a license of such procedure would entirely destroy any uniformity of tests and greatly jeopardize if not destroy their accuracy. Whenever this is done, it seems to me it will be a pro tanto deviation from the rules and regulations laid down by the duly authorized authority for that purpose, and pro tanto establishing a test or average of tests which are without and beyond these regulations. Such procedure should not be indulged in any case of mere doubt at least, but only in cases, if at all, of clearly erroneous findings on the part of the government officials. This would seem to be particularly true where opportunity is given by the regulations (article 1372) for reviewing the findings of the examiner, and which opportunity has been exercised by the importer with results that confirm the correctness of the test returned by the examiner. For these reasons I am constrained to dissent from the conclusions reached by my colleagues herein.

J. Osgood Nichols, Asst. U. S. Atty.
William J. Gibson, for the importer.

Before WALLACE, LACOMBE, and COXE, Circuit Judges.

PER CURIAM. The merchandise in question consists of "sugar drainings." It is the molasses that oozes from bags and other packages of sugar while in transit on shipboard, and which is gathered up and subsequently used for manufacturing alcohol, etc. The relevant paragraph is:

"209. Sugars * * * testing by the polariscope not above seventy-five degrees, ninety-five one-hundreths of one cent per pound and for every additional degree shown by the polariscopic test thirty-five one-thousandths of one cent per pound additional and fractions of a degree in proportion; * * * molasses testing above forty degrees and not above fifty-six degrees three cents per gallon; testing fifty-six degrees and above, six cents per gallon; sugar drainings and sugar sweepings shall be subject to duty as molasses or sugar, as the case may be, according to polariscopic test. * * *"

The present controversy is whether the importation was shown by polariscopic test to be "not above fifty-six degrees" or to be "fifty-six degrees and above." The board and the Circuit Court both found that it was below 56. Their opinions indicate that this conclusion was in part induced by a consideration of tests made by polariscopists other than those employed by the government to make the official tests. Suggestion is made that fermentation had set in when the first tests were made, but there is nothing in the record to show when it set in or when it ceased. And, whatever be the fact as to this, the condition of drainings for assessment purposes is the condition in which they were when imported, and the official test was nearer in time to the date of importation than was any subsequent test. There is no controversy as to the fundamental facts—the observed facts as distinguished from inferred facts—and they are set forth with great fullness in the dissenting opinion of General Appraiser De Vries, which also contains all relevant quotations from the treasury regulations governing the method of conducting polariscopic tests. This opinion, although written two years before, is fully in accord with the decision of this court in United States v. Bartram Bros., 131 Fed. 833, 65 C. C. A. 557, and it seems unnecessary to do more than express our concurrence with the dissentient General Appraiser in disposing of this appeal.

As was pointed out in the Bartram Case, Congress left it to the

Digitized by Google

Secretary of the Treasury to provide by appropriate regulations for the taking of tests by polariscope. The evidence in that case showed that the test was of so delicate a character that there were such sources of error, such differences of result when the same sample was tested or the same readings taken by different individuals; that it was essential to have some well-settled method, which, while not always absolutely accurate, should be at least uniform in its application. Briefly stated the method prescribed is to send to the laboratory two samples of each mark in two separate sample boxes, and at least two tests are required to be made of each sample. The respective samples are divided into two equal portions, which shall be tested by different experts, and the results averaged according to a carefully prescribed method. The tests of the two samples of a mark first sent to the laboratory, when they correspond within five-tenths of a degree, are accepted and their average taken as the true test of the sugar. Provision is made for a retest upon the importer's application.

An examination of the record shows that the dissenting General Appraiser is entirely correct in the statement that the regulations were substantially followed in determining the polariscopic test of the drainings in question and that "the one deviation, if any, was the fact that the second can of samples was sent to the laboratory after the examination of the first. Both [sets of samples were taken, prepared, and put in the two sample cans and both] examinations were made during the same day, and the samples were intermixed before being placed in the can, and two examinations of each sample were made in the laboratory, and the average duly made as prescribed by the regulations." The first can was divided into two portions, each part tested by a different expert, with the result that one part showed 55.9° and the other 56°, giving 55.95° as the accepted test of that sample. The second can, similarly tested, showed 56.1° for each portion and, of course, 56.1° for the accepted test of that sample. The average of the tests of the contents of the two sample boxes, thus taken at the same time and examined on the same day (such tests corresponding within five-tenths of a degree, article 1368), was properly taken as the "true test" of the molasses. And a subsequent retest made at the request of the importer showed a higher percentage. The average of the four readings on test of the two sample boxes first sent to the laboratory was 56.025. The importer contends that this should not be considered as "56° and above" because the fraction is so small, on the theory de minimis non curat lex. We do not assent to this proposition, the statute itself refers to fractions of a degree, and the Treasury regulations (article 1364) provide that averages shall be carried to 5 places of decimals when called for by the figures.

The decision of the Circuit Court is reversed.

Digitized by Google

(154 Fed. 9.)

THE PENNSYLVANIA.

(Circuit Court of Appeals, Second Circuit. April 30, 1907.)

Nos. 174, 175.

1. ADMIRALTY—JURISDICTION—MARITIME CONTRACTS.

Contracts of a mixed nature are not cognizable in the admiralty courts, and, where the principal subject-matter of a controversy belongs to the jurisdiction of a court of common law or of equity, the incidental matters must also be relegated to the appropriate jurisdiction, although of themselves they might be cognizable in admiralty.

[Ed. Note.—For cases in point, see Cent. Dig. vol. 1, Admiralty, §§ 131–149, 185–190.

Jurisdiction as to matters of contract, see notes to The Richard Winslow, 18 C. C. A. 347, and Board of Com'rs v. Howard, 27 C. C. A. 530.]

2. SAME.

A corporation organized to conduct a boys' school on shipboard, chartered a vessel for the purpose, and also entered into contracts with libelants, by which it engaged to take pupils for the school year, who were to be received on board and taught the ordinary studies of a preparatory course. During the year, the ship was to make a voyage to foreign countries, and the pupils were to be organized into a cadet corps and given instruction in nautical and naval matters. *Held*, that such contracts were not maritime, and that their breach by the corporation did not give libelants a lien on the vessel enforceable in admiralty.

Appeal from the District Court of the United States for the Southern District of New York.

The following is the opinion of the District Court:

HOLT, District Judge. These suits are brought to recover damages for a breach of an alleged contract for the transportation of passengers. In June, 1904, the owners of the steamship Pennsylvania chartered her to the Nautical Preparatory School for one year from June 1, 1904, for $3,000 a month. The Nautical Preparatory School was a corporation organized to conduct a boys' school on shipboard. The general scheme was to have a school on a ship, in which the ordinary subjects studied by boys in fitting for college should be taught. The ship, during the school year, was to make a voyage to the leading ports in the Mediterranean and the West Indies, ultimately returning to this country. It was not the principal object of this school to teach the boys seamanship or navigation, but they were to be organized as a cadet corps, and given incidentally some little instruction in navigation. The fundamental idea, however, was not the teaching of seamanship, but the establishment of an ordinary boys' school on a ship, giving boys the experience of a life at sea, and of a voyage to the leading sea ports of the Mediterranean and the West Indies, under intelligent supervision. The price to be paid for each boy was $1,280 a year, payable in advance. The boys were to meet about the middle of September, 1904, at Providence, R. I., the port from which the ship was to sail. About 170 such boys were enrolled in the school, assembled at Providence about the 15th of September, went on board the steamship, and remained there about two weeks. About the 29th or 30th of September, the charterer having got into such pecuniary embarrassment that it could not carry out its contract, the voyage was abandoned, and the boys left the ship. The libelants are parents or grandparents of certain boys, each of whom paid the tuition charge of $1,280. They have filed this libel in rem against the steamer to recover for the damages caused by the charterer's failure to comply with its contract.

It is alleged in defense to this action that the contract in question was not maritime in its nature. It is claimed that it was a contract to keep a school, and that the voyage upon the steamer to Europe and back was a mere incident of the contract. The question involved is novel. The rule, of course, is well

Digitized by Google

settled that an ordinary contract for the transportation either of goods or of passengers, although made by a charterer, imposes a maritime lien on the ship which can be enforced against it by a proceeding in rem (The Moses Taylor, 4 Wall. 411, 18 L. Ed. 397; The Aberfoyle, 1 Blatch. 360, Fed. Cas. No. 17); but it is apparent that, in such a case as this, the application of the general principle imposes a very heavy liability upon the owners of the vessel, which at the first glance seems inequitable. If the master of an ordinary school on land had hired certain premises in which to carry on the school, and had then violated his contract with his pupils' parents for their instruction, not only would it be deemed an absurd claim in law that any lien would arise against the owners of the real estate for tuition paid, but any attempt to make them liable would, I think, be regarded as inherently unjust. But the rule in admiralty that the ship is liable for all contracts of affreightment or transportation is based on the fact that a ship is constantly moved from one part of the world to another, and that creditors would have no adequate security and no prompt remedy for the collection of debts incurred in the operation of the ship, if, as in the case of land contracts, they were obliged to proceed against the person who incurred the debts by suits in personam. The principle, therefore, is fundamental in the admiralty that the ship is bound for all contracts, either of affreightment or transportation, and, if this was in fact a martime contract for the transportation of these boys from this country to Europe and return, it is difficult to see why the ordinary rule is not applicable in this case. It is obvious that the object of the contract was at least partly maritime. The boys were to be taken to Europe and back, and they were to be incidentally given some instruction in subjects which could only be properly taught on shipboard. The charter party was, of course, a maritime contract, and, for my part, I cannot see why, so far as the contract for tuition involved the chartering and use of a ship, it was not, to that extent, a maritime contract. The fact that a school was to be carried on during the voyage does not seem to me to be the predominant feature of the scheme, at least so far as the liability of the ship is concerned. Undoubtedly, a portion of the $1,280 paid by the parents of each pupil was for tuition; but a considerable portion also must have been paid to reimburse for the expense involved in the charter of the ship. The question is a nice one, but in my opinion the contract between the parents and the school was a contract, among other things, for the transportation of passengers to Europe and back, for the performance of which, on general principles, the steamer was liable in rem.

But it is also a general principle that no lien arises so long as such contracts of affreightment or transportation are purely executory. If the voyage is abandoned without anything having been done under the contract, no action lies in rem. The question, therefore, in this case, is whether the fact that the boys went aboard the ship and lived on it at Providence for some two weeks constituted a beginning of the voyage, within the authorities, which imposed a maritime lien on the steamer. There are some cases which seem to intimate that, if any portion of the cargo is put on board or delivered on the dock into the custody of the ship for transportation, a lien attaches, although the voyage is afterwards abandoned; but I have found no authority for the proposition that, under a contract for the transportation of a passenger, the mere fact that the passenger has gone on board the ship is sufficient to impose a maritime lien on the vessel, if the voyage is never undertaken, and is abandoned. In The City of London, 1 Wm. Rob. Adm. 88, Dr. Lushington said: "Now, in the course of the arguments that have been addressed to the court, it has been admitted on the one side that if a seaman is engaged on board a vessel, and the owners think fit to abandon the voyage for which such seaman has been engaged, he would not be entitled to sue in this court for his redress, but must seek his remedy at common law, by an action on the case. To this position I am disposed to accede, and for this reason: That in such a case there would be nothing to show the real amount of loss sustained. * * * But, again, there is another case in which it has been admitted that the court has jurisdiction, viz., where a seaman has been taken on board, the voyage been prosecuted, and during its progress the seaman has been un-

Digitized by Google

duly discharged. In this case, it is acknowledged that the seaman so discharged may seek his remedy in this court."

In The Bella (D. C.) 91 Fed. 540, 542, it is said: "Until a passenger has rendered himself on board, for the purpose of being carried as a passenger, performance of the contract has not been commenced, so as to subject the vessel to a lien. The Eugene (D. C.) 83 Fed. 222; Id., 31 C. C. A. 345, 87 Fed. 1001. Merely going on board to inspect the vessel, or to select and reserve a sleeping berth, is not any part of a journey, nor the beginning of the relation of carrier and passenger. So the owner of the cargo has no lien upon the vessel for the breach of a contract of affreightment, until the cargo, or some portion, has been laden on board or delivered to the master. Scott v. The Ira Chaffee (D. C.) 2 Fed. 401, and cases there cited. See, also, Schooner Freeman v. Buckingham, 59 U. S. 182, 15 L. Ed. 341; The Eugene, 87 Fed. 1001, 31 C. C. A. 345; The Priscilla, 114 Fed. 836, 52 C. C. A. 470, and cases there cited."

The only evidence in this case upon which claim can be made that the contract did not remain purely executory is the following statement contained in the stipulation upon which this case was submitted: "(7) Each of the boys enrolled as students, as aforesaid, went on board the said steamship Pennsylvania pursuant to the said enrollment and payment of consideration, as aforesaid, at or prior to September 15, 1904, the said steamship then lying at Providence, R. I., and each of the said boys so enrolled remained on board the said steamship about the period of two weeks, and each left the said steamship on or about the 29th or 30th of September, 1904, at Providence, aforesaid, when and where the said voyage and cruise of the said steamship was abandoned."

The inference from this statement is that the boys lived on the steamship for about two weeks, while she lay in port at Providence waiting to sail. If during that period they had remained at a hotel or boarding house at Providence, and had not gone on board until the ship was ready to sail, it seems to me clear that no claim could be made that any lien attached to the ship. The question is whether the single fact that they lived on board during the two weeks, until the abandonment of the voyage, is sufficient to impose a maritime lien on the vessel. While the question is not free from doubt, I think that no lien was created. The boys during those two weeks simply boarded on an anchored vessel. They were not yet, in my opinion, in a legal sense passengers on a ship.

My conclusion is that the libel should be dismissed, with costs.

J. M. Perry and William S. Maddox, for appellants.

Henry G. Ward, William S. Montgomery, and Robinson, Biddle & Ward, for appellee.

Before WALLACE, LACOMBE, and COXE, Circuit Judges.

WALLACE, Circuit Judge. The libelants, who brought this action to enforce a lien against the steamship, were defeated in the court below, and this appeal presents the question whether by their contract with the charterer of the steamship Pennsylvania, and the charterer's breach of the contract, they acquired a lien against the vessel enforceable in admiralty. It is conceded for the appellant that, if the contract was maritime in its nature, the libelants acquired a maritime lien by the charterer's breach, and the real inquiry therefore is whether the contract was in such sense maritime as to be cognizable in admiralty.

By a charter party made in June, 1904, between the owner of the Pennsylvania and the Nautical Preparatory School, the "bare ship, without crew, fuel or supplies," was let to the latter for the term of one year, and soon thereafter possession of the vessel was delivered

Digitized by Google

by the owner to the charterer. The Nautical Preparatory School was a corporation of Rhode Island, organized for the "purpose of conducting a school for boys on shipboard." Prior to September, 1904, the school corporation had made contracts severally with the libelants, whereby they respectively enrolled their sons as "cadet pupils" in a school to be conducted on board the steamship for the school year beginning September 15, 1904. These contracts were induced by a prospectus circulated by the school corporation, setting forth its educational scheme and the terms and conditions of its undertaking. The prospectus represented that the vessel had been chartered, and would be equipped with a library, museum, laboratory, and gymnasium; that a corps of skilled instructors would direct the studies of the pupils in a curriculum including mathematics, history, geography, literature, and the languages, and a competent director would have charge of their physical training; that the school would maintain a naval organization and discipline, the cadets being formed into companies with officers selected from themselves, and the cadets would be instructed in naval and military drills, and in the handling and navigation of the vessel; and that the school year would comprise a nine months' cruise upon the steamship to foreign countries and visits by the pupils to all places of interest in charge of the professors. The charges per school year were to be $1,280, payable in advance, covering "tuition, board, laundry, clothing, uniforms, text-books, all expenses on shore, languages, the installation of class museums, gymnastics, and athletics, and all the many extras which swell the simple tuition charges of other schools." The libelants made the advance payments of $1,280 each. Prior to September 15, 1904, the pupils went on board the steamship at Providence, where she was lying in port, and remained on board about two weeks, when the school corporation, apparently because of pecuniary embarrassment, abandoned the voyage, and the pupils left the vessel.

It is not enough that the contract includes a maritime adventure among its objects, or that it was to be performed at sea. Unless it was purely maritime, it was not one of which a court of admiralty has jurisdiction. In the language of Justice Clifford, in The Belfast, 7 Wall. 637 (19 L. Ed. 266):

> "Contracts, claims, or services, purely maritime, and touching rights and duties appertaining to commerce and navigation, are cognizable in the admiralty courts."

Contracts of a mixed nature are not cognizable in these courts, and that there is a sufficient reason for this is well illustrated by the present case. Here is the ordinary contract between school proprietors and patrons, with the further provisions that the school is to be located on shipboard, and the course of instruction is to include a foreign voyage and studies in nautical and naval matters. Combined with the provisions of common-law obligation are some that may relate to maritime services. How can a court of admiralty separate the liabilities and apportion the damages arising from the breach of the maritime part of the contract? Whenever the principal subject-matter of a controversy belongs to the jurisdiction of a court of common law, or of equity, the incidental matters must also be relegated to the appropriate

Digitized by Google

jurisdiction, notwithstanding of themselves they might be cognizable in admiralty. Kellum v. Emerson, 2 Curt. 79, Fed. Cas. No. 7,669; Grant v. Poillon, 20 How. 162, 15 L. Ed. 871; Minturn v. Maynard, 17 How. 477, 15 L. Ed. 235; Hall v. Hudson, 2 Sprague, 65, Fed. Cas. No. 5,935; Vandewater v. Mills, 19 How. 82, 15 L. Ed. 554.

In Plummer v. Webb, 4 Mason, 380, Fed. Cas. No. 11,233, Judge Story had occasion to consider a somewhat similar question in a case where a minor had been apprenticed by his parent for a voyage to sea, and had received improper treatment by the master of the vessel. Judge Story said:

"I cannot say that the whole contract is here of a maritime nature. There are mixed up in it obligations ex contractu not necessarily maritime, and so far the contract is of a special nature. In cases of a mixed nature, it is not a sufficient foundation for admiralty jurisdiction that there are involved some ingredients of a maritime nature. The substance of the whole contract must be maritime."

In Krohn v. The Julia (C. C.) 37 Fed. 369, it was held that a contract by the master of a vessel to carry cargo, sell it, and account for the proceeds, could not be enforced in admiralty. In The Illinois, 2 Flip, 383, Fed. Cas. No. 7,005, it was held that the breach of a contract for maintaining a bar for the sale of liquors upon a vessel was not the subject of admiralty cognizance. In both of these cases the contract was regarded as a common-law contract, notwithstanding it related incidentally, and to that extent materially, to the navigation of a vessel. So, in the present case, what was to be done on shipboard was merely an incident of a contract which was essentially of a common-law nature.

We entertain no doubt that the libel should have been dismissed, and the decree is therefore affirmed, with costs.

(154 Fed. 354.)

THE ASHER J. HUDSON.

(Circuit Court of Appeals, Second Circuit. June 30, 1907.)

No. 262.

TOWAGE—ABANDONMENT OF TOW—LIABILITY OF TUG.

Evidence *held* to support the finding of the trial court that the leaking of a barge in tow which made it necessary to abandon her did not result from her grounding through the fault of the tug, but that it was due to her unseaworthy condition; and the tug also *held* not in fault for not sooner going in search of the barge after her crew had been taken off and she had gone adrift at sea in the night, in view of the belief of all parties that she had foundered.

[Ed. Note.—For cases in point, see Cent. Dig. vol. 45, Towage, § 36.]

Appeal from District Court of the United States for the Southern District of New York.

On appeal from a decree of the District Court for the Southern District of New York dismissing the libel of the owners of the barge Centi-

Digitized by Google

pede to recover damages alleged to have been occasioned by the negligence of the tug Asher J. Hudson in towing the barge onto the shoals after passing Winter Quarter Lightship and in subsequently abandoning her.

The facts fully appear in the opinion of the District Judge, which is reported in 145 Fed. 731.

LaRoy S. Gove, for appellants.

E. R. Baird, Jr., for appellees.

Before LACOMBE, TOWNSEND, and COXE, Circuit Judges.

COXE, Circuit Judge. The principal question involved is one of fact, viz., Did the tug tow the barge on the shoals after passing Winter Quarter Lightship? The District Judge after hearing all the witnesses determined this question in favor of the tug and, even though the testimony were evenly balanced, we should not feel justified in reversing his finding under the well-known rule of this court. The Wallace B. Flint, 130 Fed. 339, 64 C. C. A. 584. Not only are we satisfied that the District Judge was right, but we are unable to see, after reading the record, how any other conclusion could have been reached. The burden was on the libelants to prove that the tug was at fault in towing the barge out of her true course into shoal water where she struck bottom, causing the leak which produced the disaster. Not only did they fail in this but the great preponderance of testimony proves to our satisfaction that the course taken by the tug was the proper and usual one and that the situation which made it necessary for the crew of the barge to abandon her was caused by her own unseaworthy condition.

There was no fault on the part of the tug after the crew had been taken from the water-logged barge. Everyone, including her own crew, expected her to sink and when it was discovered the next morning that she was missing the master of the tug was not required to leave the barge Camp and go in search of the Centipede, as he had every reason to believe that she was then at the bottom of the ocean. As soon as he heard that she was afloat he went to her assistance, but as she was then in charge of another tug his services were declined.

There were marks on the Centipede's bottom indicating that she had been aground somewhere, but the fact that she was beached inside of Sandy Hook and remained there for twenty-four hours is sufficient to account for this condition of her bottom. The theory that these injuries might have been caused at Sandy Hook is certainly more plausible than that of the libelants, which is disproved by the great preponderance of testimony. Although the bottom at the Hook is sandy there may have been hard substances where the Centipede was beached which, with the action of the wind and tide and the swells from passing steamers, might well account for the injuries.

It is enough, however, to say that it was incumbent upon the libelants to prove that the injuries to the bottom of the barge were caused by the negligent towing of the tug and this, as we have seen, they have wholly failed to do.

The decree is affirmed with interest and costs.

Digitized by Google

(154 Fed. 33.)

H. MENDELSON & CO. v. UNITED STATES.

(Circuit Court of Appeals, Second Circuit. January 31, 1907.)

No. 124 (3,359).

1. CUSTOMS DUTIES—CLASSIFICATION—SILK FABRICS—"IN THE GUM"—"BOILED OFF."

Under Tariff Act July 24, 1897, c. 11, § 1, Schedule L, par. 387, 30 Stat. 186 [U. S. Comp. St. 1901, p. 1669], providing for silk fabrics when "in the gum" and when "boiled off," *held*, that fabrics which on boiling lost from 18 to 27 per cent. in weight were classible under the former, rather than the latter, clause.

2. SAME—APPEAL FROM BOARD OF GENERAL APPRAISERS—INTRODUCTION OF FURTHER EVIDENCE.

As to the rule of U. S. v. China & Japan Trading Co., 71 Fed. 864, 18 C. C. A. 335, that, where an importer fails to appear before the Board of General Appraisers, he may not introduce further evidence in the Circuit Court, on appeal from the Board, under Customs Administrative Act June 10, 1890, c. 407, § 15, 26 Stat. 138 [U. S. Comp. St. 1901, p. 1933], *held*, that that rule does not apply where the importer appeared before the Board and offered some evidence.

3. SAME—EVIDENCE—EX PARTE AFFIDAVIT.

It was an offer of "evidence" where an importer appeared before the Board of General Appraisers and submitted an affidavit made by a person in a foreign country.

Appeal from the Circuit Court of the United States for the Southern District of New York.

For decision below, see 146 Fed. 78, affirming a decision of the Board of United States General Appraisers.

The case involves the construction of Customs Administrative Act June 10, 1890, c. 407, § 15, 26 Stat. 138 [U. S. Comp. St. 1901, p. 1933], respecting appeals from the Board of General Appraisers to the United States Circuit Court, which provides that the court "may" refer the case to a General Appraiser to take "further evidence * * * in such order and under such rules as the court may prescribe." The government contended, in support of the decision of the Circuit Court, that no legal evidence was taken before the Board, and that therefore no "further" evidence should be permitted in the Circuit Court; and it was argued in the brief, with regard to the provision quoted from said section 15: "The whole object of this act was to obtain, in the first instance, from the Board of Appraisers, their decision upon questions of classification; and where no legal testimony is offered before said Board when the case is called for argument, the appellant cannot in his appeal ask that further testimony may be taken. * * * Since the China & Japan Trading Company decision, it has been generally recognized that, where the importers neglected to appear before the Board on due notice, they would be denied the privilege of introducing further evidence in the Circuit Court. The question arises: Are they in any better position, if they do appear and introduce an ex parte affidavit, which would not be received or considered by any court as legal evidence?" In the importers' brief it was urged that the Board had admitted the affidavit as evidence, and that this admission made it competent under the further provision of said section that "all the evidence taken by and before said appraisers shall be competent evidence before said circuit court"; and it was pointed out that this court, in U. S. v. Downing, 146 Fed. 56, 60, 76 C. C. A. 376, had considered and given weight to an ex parte affidavit made by the exporter of the goods. Note U. S. v. Hempstead (C. C.) 153 Fed. 483.

Digitized by Google

Walden & Webster (Howard T. Walden, of counsel), for importers.
D. Frank Lloyd, Asst. U. S. Atty.

Before LACOMBE, TOWNSEND, and COXE, Circuit Judges.

LACOMBE, Circuit Judge. The merchandise in controversy consists of pongee silk in the piece imported from China and generally known as "Shantungs." It is concededly covered by paragraph 387, the relevant parts of which are as follows:

"Par. 387. Woven fabrics in the piece, not specially provided for in this act weighing not less than one and one-third ounces per square yard and not more than eight ounces per square yard * * * if composed wholly of silk, * * * if in the gum, two dollars and fifty cents per pound; if boiled off * * * three dollars per pound." Act July 24, 1897, c. 11, § 1, Schedule L, 30 Stat. 186 [U. S. Comp. St. 1901, p. 1669].

The government contends that the fabrics imported have been boiled off; the importer that they are still in the gum.

Testimony was taken in the Circuit Court, but the judge, upon motion of counsel for the government, expunged it, citing U. S. v. China & Japan Co., 71 Fed. 864, 18 C. C. A. 335. In the case cited the importer offered no evidence in support of his protest, and "failed to appear pursuant to the Board's notification to show cause why the action of the collector should not be affirmed." In the case at bar, however, the importer did appear and offered evidence, which the board found not satisfactory. It consisted merely of an affidavit made by a person in China. The rule laid down in the China & Japan Case does not apply where the importer appears and offers some evidence to support his protest. We are of the opinion therefore that the evidence taken in the Circuit Court was properly in the record and should be considered.

Upon the question in controversy the preponderance of proof is clearly with the importer, disregarding entirely the ex parte affidavit above referred to. It appears that mere inspection and manipulation will not determine whether or not a particular piece of silk has been "degummed"; that is, has been "boiled off," a process which removes the gum. The test universally employed is to weigh the silk, then boil it off, and then weigh it again. If by this process it loses in weight only some small percentage—5 per cent. or less—that fact indicates that it had been already boiled off. If, on the contrary, the loss of weight is heavy—over 15 or 20 per cent.—then it is evident that the silk had not been boiled off before the test was made. The samples of the pieces actually imported in this case had been lost or mislaid before testimony was taken in the Circuit Court; but the importer proved that the importation was of standard goods, and produced samples which he identified as being in all respects similar to the goods covered by this protest, and this testimony was corroborated by the customs examiner. These samples were tested by a disinterested witness from a silk dyeing and finishing company, who cut them into equal parts and boiled off one part of each. A comparison of weights showed a loss varying from 18 to 27 per cent., which, according to the undisputed testimony, would indicate that the sample thus tested had not previously been boiled off.

Digitized by Google

The only testimony offered by the government is the return of the assistant appraiser and the evidence of a silk manufacturer. The return, however, does not give the conclusion of the appraising officer, but states that the silk, "according to the report of the government analyst, is boiled off." No such report is presented, nor was the analyst examined, and the examiner who prepared the return declined to express his own opinion. The silk manufacturer tested the samples proved in the Circuit Court, and found that they lost less than 2 per cent. by boiling. On cross-examination, however, he admitted that he boiled them in plain water only, while it is shown that the practical business way employed to remove the gum is to boil the silk off in water containing 10 per cent. of olive oil soap. The soap softens up the gum and cuts the greases, thereby making the boiling really effective. Without the use of soap it will not thoroughly remove the gum. Upon this record it seems clear that the silk in controversy had not been boiled off before importation.

The decision of the Circuit Court is reversed.

(154 Fed. 35.)

FRIES-BRESLIN CO. v. STAR FIRE INS. CO.

(Circuit Court of Appeals, Third Circuit. May 25, 1907.)

No. 23.

INSURANCE—CONSTRUCTION OF POLICY—AVOIDANCE FOR BREACH OF CONDITION.

A single standard form of fire insurance policy adopted by a state cannot be construed as intended for use only in the insurance of real property alone or personalty alone, but may be used for the joint insurance of both, and, where so used, a provision that it shall be void, "if the subject of insurance be personal property and be or become incumbered by a chattel mortgage," applies and renders it void as to both realty and personalty, where there were chattel mortgages on the personalty covered thereby when it was issued, which fact was not disclosed to the insurer.

[Ed. Note.—For cases in point, see Cent. Dig. vol. 28, Insurance, §§ 636–651.]

In error to the Circuit Court of the United States for the Eastern District of Pennsylvania.

For opinion below, see 150 Fed. 611.

James Wilson Bayard and John G. Johnson, for plaintiff in error.

Arthur S. Arnold, for defendant in error.

Before DALLAS, GRAY, and BUFFINGTON, Circuit Judges.

BUFFINGTON, Circuit Judge. This case involves the construction of a policy of insurance issued in New Jersey to the Fries-Breslin Company, a corporation of that state, here called the plaintiff, by the Star Fire Insurance Company, a corporation of Kentucky, the defendant. The insurance was for a single premium, and was on plaintiff's factory situate in New Jersey, and sundry personal property contained therein, for the gross sum of $2,500. The policy provided:

"This entire policy, unless otherwise provided by agreement endorsed hereon or added hereto, shall be void, * * * if the subject of insurance be personal property and be or become incumbered by a chattel mortgage."

Digitized by Google

When the policy was issued, there were two mortgages given by the plaintiff on its real estate and buildings, the machinery and fixtures, and the materials manufactured and in process of manufacture therein. Each mortgage was duly recorded under the laws of New Jersey, both as a real estate and as a chattel mortgage. The buildings and personal property were destroyed by fire. Suit was brought, and a verdict had for the plaintiff, subject to the reserved question whether, under the provisions quoted, the existence of these mortgages invalidated the policy. The court's action in so holding and entering judgment non obstante veredicto in favor of the insurance company is here assigned for error.

The contention of the plaintiff, in substance is that this policy blank was not intended for a joint insurance of real and personal property, but only for the insurance of realty by itself or personalty by itself; that the avoidance clauses are drawn for such contemplated separate uses, and not for the joint insurance here involved—consequently they have no application. We cannot so construe this policy. It is unreasonable to suppose the state of New Jersey, in adopting a single standard form of policy for insurance, intended to exclude its citizens from the common practice of covering by one policy both real and personal property. The provision, "if a building or any part thereof fall, except as the result of fire, all insurance by this policy on such building or its contents shall immediately cease," evidences the policy contemplated joint insurance of real and personal property. Moreover, the existence of incumbrances on property correspondingly reduces the interest of the insured in the preservation thereof, and tends to increase the hazard to the insurance company. If such incumbrances exist, a provision that the company be advised thereof, before it accepts the risk, is reasonable. Now, the provision in question was inserted in the policy to provide against the risk being increased by incumbrances. In view of this general purpose, it is unreasonable to construe the clause in question, which is manifestly drawn to effectuate that purpose, as though it read, "if the sole subject of the insurance be personal property" or "the whole subject of insurance be personal property." Yet we must adopt such a construction to convict the court below of error. If that be the true construction, then the clause conditioned, "if the subject of insurance be a manufacturing establishment, and it be operated in whole or in part at night," and that providing "if the subject of insurance be a building on ground not owned by the insured in fee simple," would also fail to provide against increased risk and hazard, if there was insured personal property in such establishment or building. A policy, it is true, is strongly construed against insurance companies; but to give these reasonable provisions such effect as is here contended for is not to construe them, but under the guise of construction to deprive the insurer of clear rights under the contract.

Nor do the authorities warrant such construction. In Martin v. Insurance Company, 57 N. J. Law, 623, 31 Atl. 213, this form of policy was involved. The facts were the converse of those now before us. The insurance was on a building and certain chattels therein. The ground on which the building stood was not owned by the insured.

Digitized by Google

Under the avoiding provision, "if the subject of insurance be a building on ground not owned by the insured," it was held the policy was void both as to the building and the chattels therein. In the Atlas Company v. Insurance Company, 138 Fed. 497, 71 C. C. A. 21, the same wording here considered was involved. While the question here involved was not raised in that case it is significant that both in the exhaustive opinion of the court and in the dissent, it was assumed a mortgage of personal property, where the policy covered both realty and personalty, avoided the entire policy. This view finds support in Parsons, Rich & Co. v. Lane, 106 N. W. 485, 97 Minn. 98; Insurance Company v. Connelly, 104 Tenn. 93, 56 S. W. 828; Plath v. Insurance Ass'n, 23 Minn. 479, 23 Am. Rep. 697; Brown v. Insurance Company, 11 Cush. (Mass.) 280; Barnes v. Insurance Co., 51 Me. 110, 81 Am. Dec. 562.

After an examination of the authorities, we are of the opinion that both the weight of reason and authority are against the construction contended for by the plaintiff.

The judgment is therefore affirmed.

(154 Fed. 37.)

YALE & TOWNE MFG. CO. v. ALDER.

(Circuit Court of Appeals, Second Circuit. April 23, 1907.)

No. 267.

TRADE-MARKS AND TRADE-NAMES—UNFAIR COMPETITION—IMITATION OF DESIGN AND DRESS.

A manufacturer of locks who deliberately and intentionally copied a higher-priced lock made by another manufacturer in form, size, coloring, lettering, and details of finish, so that the two were substantially identical in appearance to a casual observer, and retail purchasers were likely to mistake one for the other, is chargeable with unfair competition, although the parts of the lock separately may have been open to his appropriation.

[Ed. Note.—For cases in point, see Cent. Dig. vol. 46, Trade-Marks and Trade-Names, § 81.

Unfair competition, see notes to Scheuer v. Muller, 20 C. C. A. 165; Lare v. Harper & Bros., 30 C. C. A. 376.]

Appeal from the Circuit Court of the United States for the Eastern District of New York.

Appeal from decree (C. C.) 149 Fed. 783, dismissing complaint in suit for unfair competition, consisting of the imitation of a padlock manufactured by complainant and of its catalogue number. Decree reversed at the close of the argument.

Edmund Wetmore and W. A. Redding, for appellant.

R. C. Mitchell, for appellee.

Before WALLACE, LACOMBE and TOWNSEND, Circuit Judges.

WALLACE, Circuit Judge (orally). We are prepared to dispose of this appeal now. In cases like this, where unfair competition in trade is charged, based upon the manufacture and sale by the defendant of an article in simulation of one previously put upon the market by the plaintiff, when specimens of the articles are before the court and there is no

Digitized by Google

question of their authenticity, the court can judge of the resemblance between them, and whether purchasers are likely to be deceived by the resemblance, and the testimony of experts or of dealers is of little assistance. A comparison of the exhibits satisfies us beyond any doubt that the defendant has so closely copied the plaintiff's padlock in form, size, coloring, lettering, and details of finish that his articles are likely to induce purchasers to buy his padlocks supposing them to be the padlocks of the plaintiff. Retail dealers and the trade generally will no doubt recognize differences, and are in no danger of being misled by any resemblance of identity between the articles; but the question is whether their customers, the ordinary purchasers who buy from the retail dealer, are likely to be deceived; and that they are we are thoroughly convinced.

Many of the features of the plaintiff's padlock were separately a fair subject of appropriation by rival manufacturers, because they were not original with the plaintiff, but the plaintiff was the first to assemble them together in the concrete form in which its padlock has become known to the public as its product; and, while we cannot say that the appropriation by the defendant of this particular feature or that particular feature would have been unfair, we can say that when all of the prominent ones have been appropriated, and so assembled together with slight variations in some of them that altogether they produce the same general effect, and the ordinary purchaser would not be apt to discover the difference, enough appears to establish unfair competition. The defendant has with a purpose taken the design and dress of the plaintiff's padlock. He has carefully copied it, differentiating his own from it in minor details probably intending to escape the charge of infringement; but he has gone a step too far when he has produced a padlock which to casual observation is substantially identical in appearance with the plaintiff's. His apparent purpose was to extend his trade with retail dealers and supplant the plaintiff's sales to such dealers by furnishing them with an article which could be sold readily to customers as the article made by the plaintiff. When the defendant sold his locks to the retail dealers at a considerably less price per dozen than that which they were obliged to pay for the plaintiff's locks, he placed a strong temptation before these dealers to buy his locks and increase their profits by selling them to customers wanting to purchase the plaintiff's higher-priced locks; and we are constrained to believe it was intentionally and deliberately done in order to increase his trade at the expense of the plaintiff's.

The evidence in the record shows a laxity of business morality among lock manufacturers in appropriating the form, dress, and general appearance of each other's products which is not commendable, and which it is to be hoped does not exist in other trades; but this evidence and the argument based upon it cannot influence the court in a case where infringement is clear and the public are likely to be deceived, and they as well as the plaintiff are entitled to protection.

Digitized by Google

(154 Fed. 39.)

UNITED STATES v. JOHNSON & JOHNSON.

(Circuit Court of Appeals, Second Circuit. March 5, 1907.)

No. 164 (4,077).

CUSTOMS DUTIES—COMPONENT OF CHIEF VALUE—DETERMINATION.

Tariff Act July 24, 1897, c. 11, § 7, 30 Stat. 205 [U. S. Comp. St. 1901, p. 1693], providing that the component material of chief value in imported merchandise shall be determined with reference to the value of the components in their condition as found in the article, means the state which the materials are in when put together, without regard to their value after being advanced to completion; and articles of cotton covered with varnish, in which, before combination, the latter is of less value, should be regarded as composed in chief value of cotton, irrespective of the fact that subsequent labor in applying the varnish may render it the component of chief value in the completed articles.

Appeal from the Circuit Court of the United States for the Southern District of New York.

For decision below see (C. C.) 146 Fed. 148, reversing a decision of the Board of United States General Appraisers (G. A. 6,112; T. D. 26,609), which had affirmed the assessment of duty by the collector of customs at the port of New York.

J. Osgood Nichols, Asst. U. S. Atty.

Hatch & Clute (J. Stuart Tompkins, of counsel), for importers.

Before WALLACE, LACOMBE, and COXE, Circuit Judges.

WALLACE, Circuit Judge. This appeal involves the application of section 7 of the tariff act of 1897 (Act July 24, c. 11, 30 Stat. 205 [U. S. Comp. St. 1901, p. 1693]), which provides that each and every imported article not enumerated in the act shall be assessed for duty at the highest rate at which the same would be chargeable if composed wholly of the component material thereof of chief value, and that the words "component material of chief value" shall be held to be that component material which shall exceed in value any other single component material of the article, and the value of the component material shall be determined by the ascertained value of such material in its condition as found in the article.

The importations were nonenumerated articles composed of a tubular core of cotton (some of them silk), and having superimposed upon the core several coatings of varnish. The question is, which of the component materials is the one of chief value? The articles were made in the following manner: The manufacturer first makes a tubular cotton core of the desired length and diameter; and he then prepares a varnish made of copal gum and linseed oil. The cotton core is dipped into this varnish, and when the varnish has dried sufficiently the workmen manipulate it by hand to bring the varnish to the required degree of flexibility and smoothness. These dippings and manipulations by the workmen are repeated several times until the varnish so tempered as to give the superimposed coatings the proper degree of stiffness and flexibility. Then the varnish is polished by the workmen by hand with pumice stone and cloth, in order to give it

Digitized by Google

finally the proper degree of smoothness. According to the evidence the value of the cotton cores thus used, which exceeds the value of the silk cores, is 3.86 francs per hundred. The value of the varnish, including that of the labor bestowed in combining the oil and the copal, is 1.75 francs. The value of the labor of manipulating the several coatings so as to make the final and completed coating is 15 francs.

The importers insist that because the value of the varnish, after it has been finally applied to the articles, is 16.75 francs, the varnish is the component of chief value. The Circuit Court sustained this contention.

Whether the component materials be regarded as cotton and varnish, or as cotton, copal, and oil, we are of the opinion that the cotton is to be regarded as the component material of chief value. It is true that the value of the material is to be ascertained in its condition as found in the article; but this means in the state in which it is found when it is originally put into the article, and not in the state to which it may be brought after it has been put there by the labor and skill subsequently bestowed upon it. The material may have been, and generally has been, advanced from its crude state by labor and skill to a condition in which it is fit for use in the article which is to be wholly or in part manufactured from it; and the meaning of the statute is that its value is to be ascertained, not by that of its natural state or its original condition, but by that of its condition when actually used in manufacturing the particular article. Under previous tariff acts it had sometimes been contended that in arriving at the value of the component material the test was to ascertain its value in the state in which the manufacturer had received it and before any enhancement derived from any work or labor expended upon it in bringing it to a condition fit for use in the particular article manufactured; but in Seeberger v. Hardy, 150 U. S. 420, 14 Sup. Ct. 170, 37 L. Ed. 1129, the court held that the value of the respective component materials was to be ascertained at the time "when they were in such condition that nothing remained to be done upon them except putting them together" to make the particular article. The words "in the condition as found in the article" were doubtless used by Congress to embody this construction in the statute. This interpretation of the statute is consistent with that placed upon it by this court in United States v. Hoeninghaus, 137 Fed. 478, 69 C. C. A. 626, where we held that the value of the component material as found in the article included the cost of bringing the material to the proper shape for its use in the specific article, which in that case included the cost of warping the silk, a process preliminary to the weaving process.

The judgment is reversed.

Digitized by Google

(154 Fed. 41.)

THE EUGENE F. MORAN. THE CHARLES E. MATTHEWS. THE 15 D AND 18 D.

(Circuit Court of Appeals, Second Circuit. April 30, 1906.)

Nos. 256 and 257.

1. COLLISION—FAILURE TO LIGHT TOW—PASSING SIGNALS.

A finding affirmed that a tug passing down the Hudson river at night, two scows in tow of such tug and a meeting tug, were all in fault for a collision between one of the scows and a car float alongside of the meeting tug, the tug and scows in her tow because such tows were not displaying lights and the tug also because she failed to answer the passing signal of the meeting tug, and the latter for continuing at full speed, although receiving no answer to her signal.

[Ed. Note.—Signals of meeting vessels, see note to the New York, Union S. S. Co. v. Erie & W. Transp. Co., 30 C. C. A. 630.]

Appeals from the District Court of the United States for the Southern District of New York.

These causes come here upon appeals from decrees of the District Court, Southern District of New York, holding the tugs Moran and Matthews and the scows 15 D and 18 D all in fault for a collision between 15 D and a car float belonging to the New York Central & Hudson River Railroad Company. The district judge decided the cause as to respective faults orally at the close of the trial, and subsequently filed an opinion as to obligation to put up lights and apportionment of damages which will be found reported in 143 Fed. 187.

Edward Carpenter, James Emerson Carpenter, and Carpenter, Park & Symmers, for the Du Bois Sons Company.

Charles C. Burlingham and Wing, Putnam & Burlingham, for the Moran.

A. G. Thacher and Butler, Notman & Mynderse, for the railroad company.

W. S. Montgomery, Henry Galbraith Ward, and Robinson, Biddle & Ward, for Dailey and Ivins.

Before WALLACE, LACOMBE, and TOWNSEND, Circuit Judges.

PER CURIAM. About 7:30 p. m. of February 1, 1905, the tug Moran was towing two mud scows out of a slip on the west side of the Hudson river, bound for the dumping grounds. Scow 15 D was immediately behind the Moran on a hawser, and was followed by scow 18 D on another hawser. Both scows were owned by the Du Bois Company. While thus proceeding, they encountered the tug Matthews coming up river with a car float belonging to the New York Central & Hudson River Railroad Company in tow. A single employé of the railroad company was on board the car float, coiling up lines and getting the float ready for dock, and an employé of the tug was standing on top of the cars, keeping lookout. No employé of the railroad company participated in any way in the navigation of these two vessels, which was conducted solely by the master of the tug. Collision ensued between the car float and scow 15 D. The evidence is very conflicting, and all the witnesses were examined in court before the district judge.

Digitized by Google

He held the Moran and both scows in fault because the scows were not displaying lights; and the Moran in fault because she did not answer the two-blast signal of the Matthews, or sound alarm whistles. He finds that the tow had not yet got straightened out behind the Moran, so that her failure to answer was a contributing fault. He held the Matthews in fault because she continued on at high speed, although she had received no response from the Moran. We do not understand that his conclusions are questioned if the facts be as he found them; and no good purpose would be served by discussing the details of navigation. Except for the matter of assessment of damages, questions of fact only are involved, and it seems unnecessary to set forth why it is that upon a careful study of the testimony we see no reason to reverse his finding thereon.

Interesting questions are presented as to the damages. In the first suit one-half of the damage to 15 D was assessed in equal proportions against the Matthews and Moran. In the second suit the damages to the car float were assessed in equal proportions against the Matthews the Moran, scow 15 D and scow 18 D. In the up-going flotilla the Matthews, not owned by the damaged car float, was in fault. In the other flotilla, the damaged scow 15 D, and her companion scow, owned by the same party, and the Moran, owned by another claimant, were all in fault. Under these circumstances shall the damages be assessed in equal proportions among the four offending vessels, or shall the two scows be considered a single vessel and damages assessed in thirds, or shall damages be first assessed equally between the two flotillas, and the half assessed on the south-bound flotilla be charged in thirds against each vessel composing it or half against the Moran and half against the two scows?

The authorities are not all in accord. The Komuk (D. C.) 120 Fed. 841; The Niobe, 13 P. D. 556, [1891] App. Cas. 401; The Brothers, 2 Biss. 104, Fed. Cas. No. 1,969; The Nettie L. Tice (D. C.) 110 Fed. 461; The Express (D. C.) 44 Fed. 392, 46 Fed. 860, 52 Fed. 890, 3 C. C. A. 342; The Peshtigo (C. C.) 25 Fed. 488; The Lyndhurst (D. C.) 92 Fed. 681; The Anerly (D. C.) 58 Fed. 794. A decision of the question by this court would be controlling only in this circuit, and it is highly desirable that it be settled by authority. We have therefore decided to certify the single question as to assessment of damages to the Supreme Court. When that is answered, this court will dispose of the decrees appealed from.

(154 Fed. 42.)

LANSTON MONOTYPE MACHINE CO. v. MERGANTHALER LINOTYPE CO. et al.

(Circuit Court of Appeals, Second Circuit. March 26, 1907.)

No. 197.

1. LIBEL—SPECIAL DAMAGES—PLEADING.

Where a count for libel did not contain any averment of special damages, defamatory statements alleged respecting the quality and value of plaintiff's machines were insufficient to constitute a cause of action.

[Ed. Note.—For cases in point, see Cent. Dig. vol. 32, Libel and Slander, § 248.]

Digitized by Google

2. SAME—SPECIAL DAMAGES.

Where, in an action for libel alleged to consist of a statement made to the President concerning the purchase of plaintiff's typesetting machines by the public printer, the only averment of special damages, in a count setting out defamatory statements respecting the quality and value of plaintiff's machines, consisted of expenses incurred by plaintiff in appearing at a hearing before a commission appointed by the President to investigate the matters charged by defendant against the public printer, which expenses plaintiff was under no obligation to incur, such damages were insufficient to sustain the action under such count.

In Error to the Circuit Court of the United States for the Southern District of New York.

For opinion below, see 147 Fed. 871.

A. H. Joline, Adrian H. Larkin, George E. Hargrave, and Joline, Larkin & Rathbone, for plaintiff in error.

W. M. K. Olcott and Olcott, Gruber, Bonynge & McManus, for defendants in error.

Before WALLACE, LACOMBE, and COXE, Circuit Judges.

PER CURIAM. We agree with the court below that the alleged libelous matter set forth in the first cause of action in the complaint does not charge the corporation plaintiff with any corrupt, dishonest, or dishonerable business conduct, and is exclusively an attack upon the public printer of the United States concerning his administration of the government printing office. As this count does not contain any averment of special damages, the defamatory statements respecting the quality or value of the plaintiff's machines do not constitute a sufficient cause of action. Inasmuch as the same defamatory statements are set forth in the second cause of action, together with an averment of special damages, a sufficient cause of action would be stated, were it not that the special damages are alleged to consist only in the expenses incurred by the plaintiff in appearing at a hearing before a commission, which was appointed by the President to investigate the matters charged against the public printer. If it should be conceded that the investigation by the commission followed as a direct and ordinary consequence of the attack against the public printer, the special damages stated were not incurred as a direct or necessary consequence thereof. The plaintiff was under no legal obligation to employ counsel and stenographers, or incur any other expense, in defending the public printer before the commission.

The demurrer was properly sustained by the court below, and the judgment is affirmed.

(154 Fed. 43.)

BLAKELY v. FIDELITY MUT. LIFE INS. CO.

(Circuit Court of Appeals, Third Circuit. April 19, 1907.)

No. 25.

INSURANCE—RIGHT TO RESCIND CONTRACT FOR ANTICIPATORY BREACH—ELECTION.

Where an assessment life insurance company and a policy holder differed as to the construction of the contract, and the company made an assessment which the policy holder thought excessive and refused to pay, but

Digitized by Google

tendered a smaller sum, his action was an election to stand on the contract as still in force, which election was final; and he could not afterward maintain an action in disaffirmance of the contract on the ground that the act of the company in making the assessment was an anticipatory breach.

In Error to the Circuit Court of the United States for the Eastern District of Pennsylvania.

For opinion below, see 143 Fed. 619.

W. C. Blakely, G. H. Stein, and W. B. Linn, for plaintiff in error.

Ira Jewell Williams and Simpson & Brown, for defendant in error.

Before DALLAS, GRAY, and BUFFINGTON, Circuit Judges.

BUFFINGTON, Circuit Judge. In the court below John Blakely, the plaintiff in error, herein called plaintiff, sued the Fidelity Mutual Life Insurance Company, the defendant, to recover damages for breach of its contract to insure. The plaintiff in 1879, at the age of 48, took out a policy upon his life from defendant on the mutual plan, and paid assessments of different amounts thereon until the one of $99.75, payable April 1, 1902, which was for the months of December, 1902, and January, February, and March, 1903. Before that assessment matured a difference arose between plaintiff and the company as to the proper construction of the policy. There was no repudiation or cancellation of such policy by the company. On the contrary, it stood on it, and, as construed by it, made an assessment thereon of $99.75. Nor did the plaintiff treat defendant's action as a repudiation of the contract, or accept it as a tendered breach and repudiation thereof. He simply insisted that defendant was not warranted by its terms in making as large an assessment as it did, and tendered $86.15, which he contended was the assessment the contract justified. This refused tender he stood on for ten months as continuing the policy in force, when by bringing this suit he then for the first time elected to treat the policy as at an end by reason of the alleged breach by the company and the acceptance of such breach by him. On these facts the plaintiff brought suit in disaffirmance of the contract in the court below, which court entered judgment non obstante veredicto against him. Thereupon he sued out this writ of error, assigning this for error.

Now, to warrant judgment by the court below in his favor, the plaintiff, under the ruling of this court in Supreme Council v. Lippincott, 134 Fed. 824, 67 C. C. A. 650, 69 L. R. A. 803, had to show, first, that the defendant breached its contract by anticipation, and, secondly, that such breach was accepted and acted upon by him as a repudiation of the contract. The defendant in the present case stood on its contract as made. It did not attempt to change its provisions. Its position was simply a contention for an alleged construction. It insisted upon carrying it out, and in doing so levied a certain assessment. The plaintiff likewise stood on the policy. He, too, insisted on carrying it out, and in doing so tendered a certain premium. Under the proofs here shown it is clear the plaintiff did not treat and accept the defendant's action as a breach by anticipation, and then elect to consider the contract as at an end. On the contrary, he treated the con-

Digitized by Google

tract as in life and tendered such assessment as he deemed would continue it in force. This was an express, unequivocal election, which, standing without change for 10 months, he could not, by bringing suit, then convert into an acceptance of an alleged anticipatory breach. The court below was warranted in holding this case was governed by our decision in Supreme Council v. Lippincott, supra; for of this case it may be, as was there, said:

"The principle of the finality of an election once made is applicable, we think, to the present case."

The judgment is therefore affirmed.

(154 Fed. 45.)

P. P. MAST & CO. v. SUPERIOR DRILL CO.

(Circuit Court of Appeals, Sixth Circuit. May 16, 1907.)

No. 1,625.

1. APPEAL—ASSIGNMENTS OF ERROR—TIME FOR FILING.

Under rule 11 of the Circuit Courts of Appeals (150 Fed. xxvii, 18 C. C. A. xxvii), which requires an assignment of errors to be filed with the clerk of the court below with the petition for an appeal, and provides that no appeal shall be allowed until such assignment of errors shall have been filed, additional assignments of error filed after an appeal has been perfected by the service of citation, by which the court below lost jurisdiction, constitute no part of the record, and will not be considered on the appeal.

[Ed. Note.—For cases in point, see Cent. Dig. vol. 3, Appeal and Error, § 3044.]

2. PATENTS—SUIT FOR INFRINGEMENT—ACCOUNTING.

A court has no power to award an arbitrary sum as profits or damages recoverable for the infringement of a patent, not based upon any finding made by the master on the accounting nor upon the evidence.

[Ed. Note.—Accounting by infringer for profits, see note to Breckill v. Mayor, etc., of City of New York, 50 C. C. A. 8.]

3. APPEAL AND ERROR—ASSIGNMENTS OF ERROR—SUFFICIENCY.

General assignments of error that the court erred in sustaining the report of a master, or in overruling the exceptions thereto, which were numerous, or in awarding any substantial damages thereon, do not comply with the requirement of rule 11 of the Circuit Courts of Appeals (150 Fed. xxvii, 118 C. C. A. xxvii), that such assignments "shall set out separately and particularly each error asserted and intended to be urged," and will not be considered.

[Ed. Note.—For cases in point, see Cent. Dig. vol. 3, Appeal and Error, §§ 2997-3001.]

4. SAME—REVIEW—ERRORS NOT ASSIGNED.

The purpose of the provision of rule 11 of the Circuit Courts of Appeals (150 Fed. xxvii, 118 C. C. A. xxvii), that "the court at its option may notice a plain error not assigned," is to prevent the miscarriage of justice from oversight, and it does not intend that the court is to sift the record and deal with questions of small importance, but only that it may notice errors which are obvious and of a controlling character.

[Ed. Note.—For cases in point, see Cent. Dig. vol. 3, Appeal and Error, §§ 2968-2982.]

5. PATENTS—INFRINGEMENT—REPORT OF MASTER ON ACCOUNTING.

Where, on an accounting before a master for infringement of a patent, evidence is introduced both as to damages and profits, it is proper for

Digitized by Google

the master to report his findings and conclusions upon each line of evidence separately.

6. SAME—EVIDENCE TO ESTABLISH DAMAGES.

On an accounting before a master for damages for infringement of a patent, evidence of license contracts made between complainant and other responsible parties, by which they were to pay a royalty for the use of the patented device, is admissible, and if the contracts were made in good faith, and the royalties stipulated for are so far uniform as to establish a reasonably definite basis of value, they may properly be taken as fixing the measure of damages, even though the contracts were made pending the suit, where infringement by the defendant was continuing.

7. SAME—EVIDENCE TO ESTABLISH PROFITS.

On an accounting before a master in respect to profits made by defendant from the infringement of a patent, where both complainant and defendant were large manufacturers of the articles to which the patent related and located in the same city, evidence of the cost of manufacture to complainant in its factory is admissible, and if not controverted, and in the absence of any evidence of the actual cost of manufacture to defendant, may be taken as establishing such cost.

8. SAME.

On an accounting as to profits, made by an infringer of a patent, covering a part of a machine which had practically superseded all devices to produce a similar result previously in use, it was proper, in determining the cost of manufacture, to compare the cost of making the machine with the patented device with that of making the one which was the nearest approach to it in the market and in common use.

Appeals from the Circuit Court of the United States for the Western Division of the Southern District of Ohio.

H. A. Toulmin, for appellant.
Border Bowman, for appellee.

Before LURTON, SEVERENS, and RICHARDS, Circuit Judges.

SEVERENS, Circuit Judge. This cause came here on a former occasion on an appeal of the present appellant from a decree of the court below declaring the validity of the first, second, and third claims of letters patent No. 557,868, granted to F. R. Packham for an improvement in the construction of disk grain drills, more particularly in the provision of a furrow opener therefor, the infringement thereof by the appellant, and ordering a perpetual injunction and a reference to a master to ascertain and report the profits and damages. Upon full consideration of the record on that appeal, this court affirmed the decree of the Circuit Court in all particulars and directed further proceedings thereon. 115 Fed. 886, 53 C. C. A. 36. On the reception of our mandate, that court, upon the suggestion of counsel for both parties, appointed B. R. Cowen, Esq., as master to state and report an account. The evidence in the former record was used on the reference. The new proofs submitted to him proceeded upon two distinct lines; one directed to the ascertainment of damages, estimated in the main upon royalties received upon licenses to other parties, and the other to the ascertainment of the profits realized by the defendant (below), based upon sales made by the defendant and the cost of production.

Digitized by Google

The master, in dealing with the subjects of the reference, observed the same distinction. He summed up his conclusions thereon as follows:

"Findings: I find:

"(1) That the infringement by defendant of the claims Nos. 1, 2 and 3 of the Packham patent No. 557,868, beginning in 1898, and continuing until 1902, was deliberate, wanton and continuous.

"(2) That a license fee of 25 cents per furrow opener was established by complainant, which is adopted by the master as the measure of damages.

"(2) That there is due complainant from defendant, on account of said infringement, under the standard adopted in the second finding above:

On 96,951 furrow openers at 25 cents	$24,237 75
Interest	5,460 78
Total	$29,698 53

"As an alternative to the third finding as above, in case the court should overrule the conclusion as to there being an established license fee, I find:

"(4) That the profit on the 10,236 single-disk drills carrying the infringed device was $23,031.00. Interest to September 1, 1905, $5,290.65. Total $28,321.65."

To this report, counsel for the defendant filed 26 exceptions. These exceptions were overruled by the master, as was also an exception by counsel for the complainant wherein the latter claimed to recover "the entire profits made by the defendant upon the complete drill, $100,562.22 and interest"; that is, as we understand, the profits of the business of making and selling the drills which embodied the Packham invention.

Before the case came on for final hearing, the court on motion of the defendant referred the case back to "take proof as to the entire or partial abandonment by complainant of the disk furrow opener covered by the patent involved herein, and the substitution therefor of another and different type of device for the same purpose." The proof thereupon offered by the defendant consisted of trade circulars and advertisements of the complainant dated December, 1905, and after, and certain machines made by complainant in 1906 showing an improved device for the purpose of a furrow opener, in consequence of which the Packham furrow opener had to some extent been superseded. The master reported that he was unable to discover how the later improvement should affect the consequences of the infringement from 1898 to 1902 and adhered to his former report. It is manifest that his conclusion upon the matter referred back to him was correct.

Upon final hearing the court filed a written opinion wherein, after making some general observations commendatory of the care and discrimination shown by the master's report and concerning the difficulty which usually prevents any exact adjustment of profits and damages in such cases, he concluded as follows:

"In order to meet everything which I think could be reasonably said on the score of the profits, or license fees, not being properly established as a charge against the defendant on account of the speculative feature, or any other objection urged, I have concluded to reduce the amount reported against the defendant by the master in his findings to the even sum of $18,000, and with this reduction or modification to overrule all objections to the master's findings and report, and to allow a decree for this sum, together with the cost of the cause, including the compensation to the special master, which, if not agreed

Digitized by Google

upon with him, will be fixed by the court upon further notice and further attention to the case."

Thereupon the court, on July 12, 1906, entered a decree overruling all the exceptions to the master's findings and report, and adjudging that the complainant recover the sum of $18,000 and costs, including compensation to the master in the sum of $500. On September 1st following, the defendant filed a prayer for an appeal and an assignment of errors for the following reasons:

"(1) That the Circuit Court erred in finding an arbitrary sum and decreeing its payment by defendant.

"(2) That the Circuit Court erred in sustaining the master's report to any extent, and in not overruling it altogether.

"(3) That the Circuit Court erred in decreeing the payment of any sum by defendant, and in not finding for nominal damages only.

"(4) That the Circuit Court erred in overruling to the extent that it did the exceptions filed by defendant, and in not wholly sustaining said exceptions.

"(5) That the Circuit Court erred in holding said exceptions to be technical.

"(6) That the Circuit Court erred in awarding costs and the master's fee against defendant."

The appeal was allowed, the bond approved and filed, and a citation issued on the same day. Service of the citation was acknowledged on September 6th. Then on September 8th counsel for the appellant filed in the court below additional assignments of error as follows:

"(7) That the Circuit Court erred in not sustaining the objections of record to the evidence adduced by complainant.

"(8) That the Circuit Court erred in not sustaining the objection that the alleged licenses and the testimony relating thereto were incompetent, because the licenses are of date subsequent to the commencement of the infringement.

"(9) That the Circuit Court erred in not sustaining the objection that the testimony relating to the cost of labor and material in defendant's furrow openers was incompetent and irrelevant."

The complainant also appealed, filing the following assignments of errors:

"(1) That the Circuit Court erred in setting aside the master's finding, the substance of which was that the evidence of complainant's license fee of 25 cents per furrow opener was properly introduced to show the value of the patented device, which, together with the evidence of the profits made by defendants over the device commonly used prior to the introduction of the patented device, was sufficient to warrant a recovery on that basis to the amount of $29,698.53.

"(2) That the Circuit Court erred in setting aside and refusing to confirm the master's finding, the substance of which was that the disk shield device should be compared with the device most nearly approaching the patented device open to the public and commonly used prior to the patent, and that the hoe drill fulfilled these requirements, and that it was proper to compare defendant's profits made on the disk shield device with the said hoe device.

"(3) That the Circuit Court erred in not accepting the master's finding, viz., that the single disk shield device should properly be compared with the hoe device which it supplanted, in order to ascertain the profit due to the patented feature, and that defendant's profits figured on said basis amounted to $23,031.00, which sum at least should be awarded complainant.

"(4) That the Circuit Court erred as matter of law in not allowing the Superior Drill Company that part of the profits made by P. P. Mast & Co. on the single disk drill, which were proved to be due to the patented features in suit, amounting to $2.25 per machine, which would make the judgment $23,031.00 with interest from October 18, 1905."

Digitized by Google

And this cross-appeal has been perfected.

The first question with which we are required to deal is with regard to the status of the seventh, eighth, and ninth assignments of error. Counsel for complainant insists that these assignments are not properly before us because not seasonably filed. As is seen from the foregoing statement, all the proceedings for taking the appeal were perfected by the service of the citation on September 6th, and these later assignments of error were filed in the court below September 8th. Rule 11 of this court (150 Fed. xxvii, 118 C. C. A. xxvii) requires that the appellant shall file with the clerk of the court below with the petition for appeal an assignment of the errors asserted and intended to be urged, and that no appeal shall be allowed until such assignment of errors shall have been filed. The rule was prescribed under the second section of the act creating the Courts of Appeals (Act March 3, 1891, c. 517, 26 Stat. 826 [U. S. Comp. St. 1901, p. 547]), and has the force of law. The S. S. Osborne, 105 U. S. 447, 450, 26 L. Ed. 1065.

It is the same in all the circuits. The assignment of errors is to be filed in the court below before that court loses jurisdiction, and is a necessary condition to the allowance of the appeal and the transfer of the jurisdiction to the Court of Appeals. It follows that, when these later assignments of error were filed, the case was no longer pending in the court below, and the filing them there was a futile act. They constitute no part of the record. That consists of the proceedings of the court below as they existed at the time the appeal was taken. It was held, in Mutual Life Ins. Co. v. Conoley, 63 Fed. 180, 11 C. C. A. 116, by the Circuit Court of Appeals for the Fourth Circuit, that assignments of error not filed in the trial court by the plaintiff in error or the appellant at the time he files his petition for writ of error or appeal, as required by rule 11, will not be considered on appeal, even though the judge at the time of allowing the appeal granted leave to file them subsequently. Similar decisions have been made in other circuits. Frame v. Portland Gold Min. Co., 108 Fed. 750, 47 C. C. A. 664; Lockman v. Lang, 128 Fed. 279, 62 C. C. A. 550; United States v. Goodrich, 54 Fed. 21, 4 C. C. A. 160. We think the objection must prevail.

The first assignment of error on the appeal of the defendant below is that the Circuit Court erred in finding an arbitrary sum and decreeing its payment by defendant. We think this assignment must be sustained. The court abruptly departed from the orderly course of procedure. The decree did not rest upon any finding by the master, notwithstanding the court overruled all exceptions to it. Nor is it supported by any evidence to be found in the record. It was for an arbitrary sum quite distinct from either of the results which the evidence had any tendency to prove, and the court was not at liberty to pronounce a decree at discretion. Neither profits nor damages can be awarded without proof, and that must be something tangible and sufficient to lead to some definite result. We appreciate the embarrassment and difficulties which attend these inquiries, and to which the learned judge referred; but that does not justify a departure from the rules of law governing the subject. Corporation of New York

Digitized by Google

v. Ransom, 23 How. (U. S.) 487, 16 L. Ed. 515; Philp v. Nock, 17 Wall. (U. S.) 460, 21 L. Ed. 679. The decree, therefore, in so far as it adjudges a recovery by the plaintiff of the sum of $18,000, will be reversed.

The court overruled the exceptions to the master's report, being of opinion, as the learned judge states, that they did not go to the justice or equity of the case. The second, third, fourth, and fifth assignments of error filed by the appellant (defendant below) relate to the action of the court upon these exceptions. In behalf of the appellee, counsel make the objection that these assignments are too vague and indefinite, that they do not comply with the rule of this court, and ought not to be considered; and we are of opinion that the objection is well taken. There were 26 in number of the exceptions to the master's report filed by defendant below. Rule 11 requires that the appellant, in assigning the errors of which he complains, "shall set out separately and particularly each error asserted and intended to be urged." This rule was prescribed as well for the benefit of the adverse party in preparing his case for hearing as for the convenience of the court in its examination of the record and disposition of the questions presented. None of these requirements are met by these assignments. Thus, the second assignment is that "the court erred in sustaining the master's report to any extent, and in not overruling it altogether." This depended on the question whether the exceptions to it were well taken or not, and would require the court to examine each and all of them to find which were material and so far vital that it should have influenced the decree and which should be held unimportant or frivolous, as some of them would seem to have been; and, to know what foundation they severally had, the court would be required to search the record to find the evidence or particular proceeding to which they related. Each of the exceptions was several and complete, and an assignment of errors based upon the overruling of them should have been aimed at such of them as the party intended to rely upon "separately and particularly," as the rule is.

The third assignment is that the court erred in decreeing the payment of any sum by defendant beyond nominal damages. This also presents no distinct and separate question, but is the result of the solution of many to which the court is remitted; more particularly to the master's report and the exceptions. Guided by this assignment, where shall we begin? It is manifest that we must read the whole record of the proceedings before the master and the court subsequent to the original decree to respond to the assignment and form our conclusion. It followed from our former decision that the complainant was entitled to nominal damages at least, and the whole of the subsequent inquiry was whether it was entitled to substantial damages. The exceptions being overruled, the normal consequence would be a decree based on the report.

The fourth assignment, that the court erred in overruling the exceptions filed by the defendant to the extent that it did, and in not wholly sustaining said exceptions, points to no particular error, but to a general conclusion, and is subject to the same criticism as have been made upon the second and third. The decisions upon this provi-

Digitized by Google

sion of rule 11 in the several Courts of Appeals are very numerous. Among them are Deering Harvester Co. v. Kelly, 103 Fed. 261, 43 C. C. A. 225; Rhode Island Locomotive Works v. Continental Trust Co., 108 Fed. 5, 9, 47 C. C. A. 147; Chandler v. Pomeroy, 96 Fed. 156, 37 C. C. A. 430; McFarlane v. Golling, 76 Fed. 23, 22 C. C. A. 23; Smith v. Hopkins, 120 Fed. 921, 57 C. C. A. 193; United States v. Lee Yen Tai, 113 Fed. 465, 51 C. C. A. 299.

The fifth assignment is that the court erred in holding said exceptions to be technical. This is founded upon an expression in the opinion of the judge, and not upon anything contained in the decree, and indeed would in any case not be a proper subject of an assignment of error.

Rule 11, above referred to, declares that "errors not assigned according to this rule will be disregarded"; but it is added that "the court at its option may notice a plain error not assigned." And counsel for the appellant (defendant below) asks us to exercise this option in its favor and take cognizance of some matters which he thinks are plain errors in the record before us, referring to several cases where we have exercised this privilege. In the circumstances, although we are loath, at this late day, to longer indulge the disregard of a wholesome rule, the court is inclined to inquire whether there is in the record any error so plain that the court ought to take notice of it. It is manifest, however, that the rule does not intend that we are to sift the record and deal with questions which are of small importance, but only to notice errors which are obvious upon inspection and of a controlling character. The underlying purpose of this reservation in the rule is to prevent the miscarriage of justice from oversight.

We observe that the master who conducted the reference was a man suggested by both parties, doubtless from his long experience and recognized ability; that, as before stated, the testimony on the reference was directed to both lines for recovery, namely, profits on the one and damages on the other; and that the master followed this scheme, not for the purpose of duplicating the damages (using this expression in its wider sense), but because, in the well-understood difficulties of making sufficient proof to satisfy the law under either head, the complainant might be able to succeed on one line, even if he should fail on the other. The master's report shows that, though he was impressed that the proof was sufficient to make out a case for damages, he thought it expedient to report his conclusions upon the proof offered in support of the claim for profits, to the end that the court should have the data for a decree upon the adoption of either basis as the court should deem proper. Counsel for appellant objects that it was improper and irregular for the master to report in this alternative way, and that he should have reported the one thing or the other as his definite conclusion; but we are unable to appreciate the force of the objection. On the contrary, we think the course pursued by the master was well advised, as conducive to a proper result.

The proof of damages submitted to the master consisted of licenses granted to a large proportion of the leading manufacturers and large dealers in grain drills, which in general included only the Packham patent, on which royalties substantially uniform were agreed to be

Digitized by Google

paid, and it was upon the basis of such royalties that the master reckoned the damages. The principal objection made by the defendant to this proof was that these licenses were made after this suit was begun and while it was pending. This was the fact; but some further facts should be noted in this connection. Contemporaneously with the running of these licenses and the pending of this suit, the defendant was continuing the infringement of the Packham patent. The licenses recited the pending of the litigation over that patent, and stipulated that, if it should be adjudged invalid, the royalties should cease or be remitted. The licensees were all substantial parties, and their responsibility is not questioned. Whether they had all paid the royalties does not appear. In some of the decisions upon this subject, language has been used of a character which, if construed without reference to the facts of the cases in which it was expressed, would be wide enough to support the objection above stated; but the reason which forms the ground on which evidence of royalties paid on licenses is received as a basis on which to estimate damages is that where they are fully stipulated for by a large number of well-informed business men, and are so far uniform as to establish a reasonably definite basis of value, it is as good a test of value of the use of the invention as can well be supplied, for it cannot be supposed that business men would generally pay more for a thing to use in their lines of business than it was reasonably worth. Of course, if the circumstances were such as to give fair room for the suspicion that the bargain was collusive, the evidence derived from such royalties should be regarded as unreliable. In the present case, so far as we can see, there is no room for suspecting collusion, and the nature of the contracts in the circumstances would seem to repel any doubt of their good faith. Nor can we perceive any reason why the evidence in such cases should be hedged about with suspicions and artificial limitations not felt or imposed in dealing with business transactions generally. But there are so many dicta which seem to recognize the doctrine for which counsel for the appellant contends that we think it best to surrender, for the present, our strong impression that there was sufficient evidence before the master to have justified him in his finding in regard to the damages which the complainant was entitled to recover. We are the more disposed to do this for the reason that we think that the alternative finding of the master rests on more secure grounds, and the difference in results is not very substantial. In proof of the profits realized by the defendant, evidence was taken to show the cost and selling prices respectively of drills containing the Packham patent. This was done in respect to the cost by evidence of the cost of the special parts of hoe drills peculiar to those drills and of the increased cost of the corresponding parts of drills containing the Packham invention, and evidence tending to show that hoe drills were the kind in most general use before the date of Packham's patent. The selling price was proved by evidence of the increased price at which the defendant sold the infringing drills containing the Packham invention, over the price at which the defendant and others sold the hoe drills of corresponding capacity; that is, having the like number of seeding tubes to which the special parts of all grain drills are

Digitized by Google

attached, and the other parts of hoe drills and disk drills being alike.

It is fairly inferable that the incidental expenses of manufacturing and selling the two kinds of machines would be substantially the same. If there was any difference, it would be in favor of the machine most easily sold and in greater numbers. In a case where the whole profits of the business are sought to be recovered, this item might be worthy of more consideration. From this evidence the master found that the defendant's profit on each drill containing the furrow opener of the Packham patent sold by it was $2.25, and the defendant admitted the sale of 10,236 of such drills. The master therefore reported the profits at $23,031, to which he added interest from the expiration of each year of the sales to September 1, 1905; the whole sum being $28,321.65. Our own impression from the evidence is that this was a very moderate sum, and that a larger sum would have been justified.

The witness by whom the comparative cost of the hoe drill attachments and the furrow opener attachments was proved produced a schedule showing a detailed statement of the items going into each. An objection was made to this testimony after it was given "in part as stating conclusions, while, as to the tables of cost of production given above, they object to them as a mere prearranged calculation incompetent for any purpose in this case." The witness was the president of the complainant, and the cost estimate was one made by him as the result of his experience in his own factory; and the principal objection now urged is that an estimate of what the cost would be at the complainant's factory is no criterion of the cost in defendant's factory. Perhaps it would not be the best criterion if the actual cost to defendant had been shown; but the defendant did not offer to prove that, although the proof was under its own control, nor did it offer any evidence to prove that the estimate given by the complainant's witness was incorrect, nor raise any such point at the taking of the testimony by a proper objection. Besides, these parties are both large concerns doing a similar business at the same place. Under such circumstances, we think the proof was admissible. At all events, it is not open to an objection not taken until after the testimony was given.

The only other objection that we shall notice is that the comparison of cost of production of the Packham furrow opener with that of the cost of the hoe drill was improper, "because," as counsel for the defendant says, "the law requires that the two things to be compared must be adequate to produce an equally beneficial result." This proposition seems to have been borrowed from cases where the circumstances were such as to make such a comparison possible. It has no application to a case such as this. There was no such other thing to compare the Packham furrow opener with. Other disk drills had been almost completely superseded by it, and the furrow opener, which was the beneficial feature of the patent, was altogether new. The comparison was in fact made with the nearest approach to the Packham invention in the market and in common use. It would fulfill the requirement of the counsel's proposition if we substitute "a similar result" for "an equally beneficial result," for the similar result would be in the fact that the two machines were each adapted to sowing and covering the

Digitized by Google

seed in drills, and the rule above stated, to be applicable to such a case as this, must be modified to suit the different circumstances.

In this instance the master followed such precedents as Suffolk Company v. Hayden, 3 Wall. (U. S.) 315, 18 L. Ed. 76, where the patent was for an improvement in cotton cleaners, which consisted in the prolongation of the trunk in the machine. Upon the accounting for the infringement, the court below permitted evidence as to the advantages of the improvement over the previous methods of cleaning cotton. This course was approved, and Mr. Justice Nelson said:

"There being no established patent or license fee in the case, in order to get at a fair measure of damages, or even an approximation to it, general evidence must necessarily be resorted to; and what evidence could be more appropriate and pertinent than that of the utility and advantage of the invention over the old modes or devices that had been used for working out similar results? With a knowledge of these benefits to the persons who have used the invention, and the extent of the use by the infringer, a jury will be in possession of material and controlling facts that may enable them, in the exercise of a sound judgment, to ascertain the damages, or, in other words, the loss to the patentee or owner by the piracy, instead of the purchase of the use of the invention."

In the case of the Cawood Patent, 94 U. S. 695, 24 L. Ed. 238, the patent was for an improvement of the anvil or swedge-block for mending railroad rails. The former method had been by mending them on an anvil. The Supreme Court held that the profits which should be recovered for the infringement were the difference between the cost of mending by the old method and the cost of mending by the patented device.

In Sessions v. Romadka, 145 U. S. 29, 12 Sup. Ct. 799, 36 L. Ed. 609, a very instructive case, the improvement was for a trunk fastening consisting of a fixed tang and a spring-pressed catch. The former fastening consisted of straps and dowels. Upon the accounting, the master reported the profits upon the basis of a comparison of the cost of making and applying the strap and dowels and the cost of making and applying the fastenings of the infringed patent. An exception to this method of estimating the profits was sustained by the lower court, and a decree for nominal damages was entered. This decree was reversed by the Supreme Court, and the report of the master approved. In the opinion of the court by Mr. Justice Brown there is an extended discussion of the subject, in which the authorities are collected. It is too long to be canvassed in detail here.

The manager of the defendant company in his testimony before the master said that:

"No profit, or separate profit, gain, or advantage has been made or derived from the Packham features of said grain drill furrow opener by said P. P. Mast & Co."

The disingenuousness of this statement is demonstrated by the master in his report when he says:

"Yet the testimony shows that defendant began its infringement in 1898, at which time the trade in the Packham patent was well established; that President Mast, of defendant company, having purchased one of complainant's drills carrying the Packham single-disk furrow opener, the same was deliberately copied and put upon the market by defendant; that defendant was sued for infringement of said patent, June 16, 1898; that in October, 1901,

Digitized by Google

it gave a supersedeas bond and continued that infringement up to and during 1902; that its president, P. P. Mast, conceded that the Packham single-disk furrow opener sold the drills and made it necessary for his company to make a similar drill.

"There is abundant uncontradicted testimony both on the statement of dealers and in the experience of manufacurers that the trade went largely to the Packham single-disk drill furrow opener on its introduction, and that the sale of the machines theretofore in use fell off in like proportion; that farmers owning and using good hoe and shoe drills cast them aside, 'or sold them for most anything they could get,' and bought the Packham single-disk drill; that canvassing agents in many sections could not sell the hoe and shoe drill after the introduction of the Packham single-disk drill, though the former were exactly similar in all respects to the latter, save in the single feature of the Packham single-disk furrow opener; and that during the infringing period defendant made and shipped to the trade 104,557 single-disk furrow openers, of which 96,951 were actually sold and not returned."

The complainant called as a witness the manager of the jobbing and sales department of the defendant, and endeavored to get some evidence to show the prices at which the defendant had sold grain drills, among others the drills containing the Packham invention; but the effort was fruitless, and no fact of any importance could be elicited. The testimony of these two witnesses shows how hopeless the prospect of proving the facts would have been, if the complainant had been obliged to depend on the evidence to be obtained from the defendant's officers in regard to the profits which it was entitled to recover.

It is contended for the appellant that the master should have made some apportionment in his estimate of profits to other features of merit in the drills sold by the defendant. No doubt, if the defendant could have satisfied the master that there were some other special features not common to grain drills, which contributed to the profits, it would have been his duty to make an apportionment, and award to the Packham patent only such part of the profits as the proof would justify; but there was no factor brought forward which was entitled to share in the profits the master was inquiring about. As we held in a recent decision in the case of Canda v. Michigan Malleable Iron Co., 152 Fed. 178, following Elizabeth v. Pavement Co., 97 U. S. 126, 24 L. Ed. 1000, the burden was on the defendant to prove that there existed such a factor; and see, to the same effect, Sayre v. Scott, 55 Fed. 971, 3 U. S. App. 643, 5 C. C. A. 366; Tuttle v. Claflin, 76 Fed. 227, 45 U. S. App. 105, 22 C. C. A. 138. When some other invention is employed and contributes to the profits, the infringer is liable to that party also, and he is entitled to be guarded against being compelled to pay two different parties for the same thing; but that difficulty does not arise when only things open to public use are used in the patented combination. The master was not proceeding upon the basis of ascertaining the profits which the defendant made in its business of selling drills containing the Packham invention, but only the profits gained from the use of that invention in the making and selling the drills. He overruled the contention of the complainant that it should recover the profits of the defendant's business in making and selling the drills. This was the question which was presented in Garretson v. Clark, 111 U. S. 120, 4 Sup. Ct. 291, 28 L. Ed. 371, where the court denied the right to recover the profits on sales of the articles,

Digitized by Google

but recognized the right to recover to the extent that the invention enhanced the profits of the sales.

If, as the master found, the infringement was "deliberate, wanton, and continuous," and the profits which the defendant made in using the complainant's patent were so confused in the profits in making and selling the machines that the former could not be ascertained, it may well be doubted whether the complainant was not entitled to recover the whole profits. There is much apparent discord in the decisions upon the question of the proper method of determining the profits and damages which may be recovered on account of the infringement of a patent. Probably it would be possible to reconcile the most of them by carefully attending to the different facts upon which the decisions were rendered. In recent times the case most frequently referred to is Garretson v. Clark. In that case the patent was for an improvement in the construction of a mop head, and the question came up on the accounting for profits made by the infringer. The facts are more fully stated in Garretson v. Clark, 15 Blatchf. (U. S.) 70, Fed. Cas. No. 5,248, where Mr. Justice Blatchford laid down the rules approved by the Supreme Court on the appeal, and so often quoted in subsequent cases. The only proof which had been laid before the master was of the profit made by the defendant in selling mop handles which contained the improvement of the handle. The master in his report said:

"There has been no evidence before me that would warrant a finding that the whole success of the mops in question, either of the defendants' or of the complainant's manufacture, was due to the peculiar construction described in the claims of the patents above referred to. Nor could I find, from the evidence, that that peculiar construction constituted the sole feature that made the mops a success in the market. Such finding would be required to sustain the complainant's theory of damages."

And, again:

"The complainant's invention has peculiar and distinctive features in the form of construction and operation referred to, but these features alone do not constitute a mop, and there were many valuable mops in the market before these features were at all introduced. The evidence shows many such mops as made in the past, and even as made in the present, for the defendants appear to be now selling with success a mop not claimed to infringe the complainant's invention."

No one could doubt that the master was perfectly right. In confirming the report, the learned judge laid down certain broad and general propositions, as follows:

"The patentee must in every case give evidence tending to separate or apportion the defendant's profits and the patentee's damages between the patented feature and the unpatented features, and such evidence must be reliable and tangible, and not conjectural or speculative; or he must show, by equally reliable and satisfactory evidence, that the profits and damages are to be calculated on the whole machine, for the reason that the entire value of the whole machine, as a marketable article, is properly and legally attributable to the patented feature."

These propositions were inspired by the facts of that case, and are undoubtedly to be applied to every case when the facts fit the measure of either of the bases on which the law was then laid down, for their approval by the Supreme Court makes them of paramount authority;

Digitized by Google

but it has frequently happened that the facts of cases, which might in a general way seem to invite the application of those rules, yet present other grounds which would prevent their application without doing great injustice, and it would seem that other conditions exist if the infringer's conduct has been of the character which the master's report attributes to it, and would furnish ground for the application of the rule laid down by Chancellor Kent in Hart v. Ten Eyck, 2 Johns. Ch. (N. Y.) 62, 108, where an account was being taken. "If," said he, "a party having charge of the property of others so confounds it with his own that the line of distinction cannot be traced, all the inconvenience of the confusion is thrown upon the party who produces it, and it is for him to distinguish his own property, or lose it." Obviously, the rule would not be less applicable if the party acquired the possession by a wrongful dispossession of the owner. In the cases of Smith v. Township of Au Gres, 150 Fed. 257,[1] and Smith v. Mottley, 150 Fed. 266,[2] we accepted and applied this rule in fixing the liability for the wrongful confusion by one of the property of another with his own. But we infer from the record that the complainant acquiesced in the ruling of the master in this regard, and we do not pursue the matter further. We have referred to it as one of the reasons which satisfy us that the defendant would suffer no injustice from a decree for a smaller sum than the amount with which it might properly have been charged.

We have said all that is necessary in regard to the complainant's exceptions in discussing the principal points of the controversy. In our former opinion we expressed our conviction that the invention of Packham was a meritorious one; and the record now before us confirms us in the belief that it contributed to the organization of drills of this class the element which made them highly successful. It was natural that it should supersede the old structures of its class and render them practically unsalable. It seems, also, from what now appears, that in a large part of the country it superseded to a great extent all other classes of drills, during the period of the defendant's infringement. The defendant's conduct in seizing and stubbornly hanging onto the subject of the patent and the large number of sales it made is persuasive evidence of its merit.

The foregoing are the large questions in the case, and we perceive no such substantial error in the master's proceedings as to require, for the sake of doing justice, the rejection of his report. And upon the whole we are satisfied that the defendant, at least, has no just ground for complaint, if a decree be entered for the sum indicated by the master as representing the profits made by the defendant, which is the sum of $23,031 with interest on that sum from the filing of the master's report on October 18, 1905, to the date of the entry of the decree, with costs. The fourth assignment of error on the cross-appeal of the appellee is sustained, and the finding of the master therein mentioned is approved to the extent indicated in this assignment of error. The appellant, who was the defendant below, should be charged with the costs of this appeal.

The court below will enter a decree in accordance with the foregoing opinion.

[1] 80 C. C. A. 145. [2] 80 C. C. A. 154.

Digitized by Google

(154 Fed. 58.)

LEEDS & CATLIN CO. v. VICTOR TALKING MACH. CO. et al.

(Circuit Court of Appeals, Second Circuit. May 2, 1907.)

No. 282.

PATENTS—CONTRIBUTORY INFRINGEMENT—TALKING MACHINES.

A manufacturer of sound records only adapted to be practically used within the United States in a patented talking machine made and sold by another, in which the record disk, while not itself patented, is an essential element of the patented combination, who sells the same to owners of such machines for use therein is a contributory infringer of the patent.

[Ed. Note.—For cases in point, see Cent. Dig. vol. 38, Patent, § 401.

Contributory infringement of patents, see note to Edison Electric L. Co. v. Peninsular Light, P. & H. Co., 43 C. C. A. 485.]

Wallace, Circuit Judge, dissenting.

In Error to the Circuit Court of the United States for the Southern District of New York.

See 148 Fed. 1022, 79 C. C. A. 536.

Louis Hicks, for plaintiff in error.

Horace Pettitt, for defendants in error.

Before WALLACE and COXE, Circuit Judges, and HOUGH, District Judge.

HOUGH, District Judge. Defendants in error, having brought suit against the plaintiff in error alleging infringement of the Berliner Gramaphone patent (No. 534,543), procured an injunction restraining the manufacture, use, or sale of sound reproducing apparatus or devices embodying the subject-matter specified in claims 5 and 35 of said patent, and also the use or employment in any way of the method set forth in claim 5 thereof (reported [C. C.] 146 Fed. 534, affirmed by this court 148 Fed. 1022).[1] The claims protected by such adjudications are "a sound reproducing apparatus consisting of (1) a traveling tablet having a sound record formed thereon and (2) a reproducing stylus shaped for engagement with said record and free to be vibrated and propelled by the same, substantially as described" (No. 35), and the "method of reproducing sounds from a record of the same," consisting in "(1) vibrating a stylus, and (2) propelling the same along the record by and in accordance with the said record substantially as described" (No. 5); the "record" being identical with the "traveling tablet" above mentioned. In other words, the invention under consideration is the Victor Talking Machine, and the feature thereof here important is that its reproduction of sound depends upon the record groove cut in the traveling tablet (or disk record) compelling the movement of the stylus across the face of the record by the horizontal revolution of the record itself. The reproducer of which the stylus is an integral part is covered by claims of the Berliner patent, not now in question; but of the combination protected by claims 5 and 35 thereof the stylus alone (or rather the machine of which it forms a part) is itself patented, while the traveling tablet, sound record or disk record, is an unpatented article.

[1] 79 C. C. A. 536.

Digitized by Google

The Leeds & Catlin Company is a manufacturer of disk records, and, since the decision of this court above referred to, asserts that it has become a dealer in another talking machine known as the "feed-device machine," which for the purposes of this cause may be regarded as not infringing any of the rights of the Victor Company under the Berliner patent. The Leeds & Catlin disk records are equally suitable for the feed-device machine, and for that of the defendant in error.

Plaintiff in error was found to have sold disk records forming an essential part of the sound reproducing apparatus and devices covered by the above-mentioned claims of the Berliner patent, and was fined for such violation of injunction. This writ of error is to review the order imposing said fine.

On ample evidence, the court below found that most of the sales of Leeds & Catlin records were knowingly made by the plaintiff in error to enable the owners of Victor Talking Machines to reproduce such musical pieces as they wished by the combination of the Leeds & Catlin record with said machines; that the Leeds & Catlin Company made no effort to restrict the use to which their records might be put until after motion to punish for contempt had been made; that the only effort at such restriction ever made was to insert upon the face of the records a notice to the effect that such record was intended and sold for use with the "feed-device machine"; that the records sold by plaintiff in error were far more frequently bought to increase the repertoire of the purchaser's Victor machine than to replace worn-out or broken records. In our opinion it is also established by the evidence that the "feed-device machine," above referred to, was not at or before the time of beginning this proceeding a practically or commercially known reproducer of musical or spoken sound, whereas the Victor machine, embodying the claims of the Berliner patent here under consideration, was at such times widely known and generally used, and that the plaintiff in error knew, and sold its records with the knowledge, that if its output was to be used at all by the public it would be used with the Victor machine, and in the combination protected by the claims of the Berliner patent above referred to. Upon these facts it is clear that the Leeds & Catlin Company have made and sold a single element of the claims of the Berliner patent, with the intent that it should be united to the other element and complete the combination; and this is infringement (Heaton Peninsular, etc., Co. v. Eureka Specialty Co., 77 Fed. 297, 25 C. C. A. 267, 35 L. R. A. 728) adopted by this Court (Cortelyou v. Lowe, 111 Fed. 1005, 49 C. C. A. 671).

The facts above recited are scarcely controverted, nor is it denied that the above inference should ordinarily be drawn; but plaintiff in error seeks to avoid that result by asserting that the records under consideration are but temporary, perishable, and unpatented parts of the patented combination; and therefore under Morgan Envelope Co. v. Albany Paper Co., 152 U. S. 425, 14 Sup. Ct. 627, 38 L. Ed. 500, free to be manufactured and sold by any one. This contention is not supported by the evidence. Disk records are fragile (i. e., brittle and easily broken), but they are not perishable (i. e., subject to decay by their inherent qualities, or consumed by few uses or a single one). Neither are they temporary, i. e. not intended to endure; on the con-

Digitized by Google

trary, we find them capable of remaining useful for an indefinite period, and believe that they usually last as long as does the vogue of the sounds they record. A rifle bullet, lost by a single discharge, is a perishable and temporary part of the combination of rifle and ammunition, and probably a cartridge shell, though capable of reloading and use several time, may also be so regarded; but the missile of a toy gun, picked up and used again and again in its original form, is in no proper sense of the words either "perishable" or "temporary," though it may by repeated use wear out sooner than does the gun with which it is repeatedly combined.

Again it is urged inasmuch as disk records are unpatented articles of commerce, which may be used upon the feed-device machine or lawfully exported to foreign countries, that no infringement can be alleged against the maker and seller thereof, because his product may be or is in fact used by purchasers as one element of a patented combination. This argument disregards the facts established herein. It is true that the doctrine of contributory infringement has never been applied to a case where the thing contributed is one of general use, or suitable to a variety of other uses, especially where there is no definite purpose that the thing sold shall be employed with others to infringe a patent right. Rumford Chemical Works v. Hygienic Chemical Co. (C. C.) 148 Fed. 866, and cases cited. But this plaintiff in error is shown to have manufactured and sold records for the express purpose of supplying the users of Victor machines; nor are such records staple articles of commerce (Cortelyou v. Johnson, 145 Fed. 935, 76 C. C. A. 455); on the contrary, they cannot be practically used within the United States except with the Victor reproducer; for we regard the feed-device machine either as a curiosity or a pretense, while the foreign trade of plaintiff in error is not interfered with by the injunction, nor affected by the order under review.

It is further contended that those who purchase the patented combination in question without restriction have lawful right to provide themselves with unpatented records made by any person whatever, by way of replacement and repair. We perceive no substantial difference in the meaning of these words. To return to use something injured or lost, or to substitute for something defaced or destroyed another thing substantially identical, is to repair. The right of general repairing has not been questioned; but what plaintiff in error has done is not to mend or better broken or other records, nor even to furnish new records identical with those originally offered by the Victor Company, but to place upon new disks such other sound records as are thought to command a market, and to induce users of the patented machine not to replace, but to increase their stock of recorded words and music. The right of repair is measured by the right of the owner of the patented article, and such owner, when doing what is above outlined, is no more repairing his machine than is one repairing a stereopticon, by changing the pictures therein to suit the whim of the person gazing through it.

The final contention against the order below admits that the record actuating the stylus is a vital part of the combination claims of the patent in question; but declares that any purchaser of the patented article

Digitized by Google

may immediately substitute for even an essential element therein any other element which he conceives better suited to his purpose, and, of course, if this be true, such preferred elements may be freely manufactured and sold. We think this contention disposed of by Thomson-Houston, etc., Co. v. Kelsey, etc., Co., 75 Fed. 1005, 22 C. C. A. 1; for the right of substitution there recognized was specifically restricted so as to refuse "authority to reconstruct or rebuild a combination which has been sold by the complainant," and, whenever a Leeds & Catlin record is placed in a Victor machine, the patented combination is instantly reconstructed. The right of substitution rests upon the right to improve, pointed out by Clifford, J., in Chaffee v. Belting Co., 22 How. 223, 16 L. Ed. 240, and is different from the right to repair. But there is here no true substitution, and improvement is scarcely pretended. From a legal standpoint the disks of both parties are identical, because the grooving capable of actuating the reproducer is the same. What is substituted is but music or words, and what is improved, either price or novelty, is sound. These are but accidents, and no more important than the color of the disk. The true inquiry is whether the owner of a patented combination, the elements of which are durable, unbroken, and in good repair, may buy from the patentee one specimen of a single element, from an outsider an indefinite number of identical specimens of the same element, and keep and use them all, under cover of the word "substitution"; it further appearing that the element so procured and used is useful and commercially known only in respect of the said combination.

We think this cannot lawfully be done, and affirm the order below.

WALLACE, Circuit Judge (dissenting). In considering the question of infringement, claim 5 may be laid out of view, as it covers merely the function of the machine or combination of claim 35. It is more than doubtful whether the claim is not void upon its face, but assuming it to be valid, as must be done for present purposes, it is not infringed except by using the combination or machine of claim 35. A sound record is one of the parts enumerated in claim 35. It is, however, only a subsidiary part of the machine. Its relation to the machine proper is analogous to that of the sheet of paper in a typewriting machine or the stalks of corn in a corn cutter. It is the thing which is to be operated on by the machine proper. The invention of the claim consisted in substituting a universal joint, or swinging arm, in lieu of a feed screw device, and thereby producing a new form of reproducing stylus for engaging with the record and everything else in the machine was old. This clearly appears by the opinion in the suit in which the validity of the patent was established. Victor Talking Machine Co. v. American Graphophone Co. (C. C.) 140 Fed. 860.

It is not questioned, and cannot be, that the plaintiffs in error were at complete liberty to make and sell such sound records as they did, provided they did not sell them to purchasers who had no right to use them in combination with the other devices enumerated in claim 35. They have been adjudged guilty of contempt because they have sold them, or threatened to sell them, to users of the so-called "Victor" machine which embodies the combination, and who purchased their

Digitized by Google

machines from the Victor Talking Machine Company, the owner of the patent. If these purchasers were at liberty to remove a sound record which originally accompanied the machine, and substitute for it a sound record sold by the plaintiffs in error, they were not infringers; and plainly the plaintiffs in error could not be infringers by assisting the purchasers to do that which they had a right to do. The real question in the case, therefore, is whether the purchasers of the Victor machines infringe the patent by using in their machines the sound records manufactured by the plaintiffs in error.

The purchaser of a patented machine from the owner of the patent acquires the right to do what he may choose with the particular machine, or any of its parts, as freely as he could if it, or none of its parts, had ever been patented. Undoubtedly he cannot, after his machine has practically ceased to exist for any useful purpose, reconstruct it by reparation, nor can he then reconstruct it by disorganizing it and substituting as new parts the dominating and vital features of the patented invention. But no question of this kind is involved in the present controversy. The only question is whether he can discard a part he does not care to use, and substitute another. When such a part is not the fundamental invention in the patented machine, I cannot doubt he is at liberty to do so. This was so decided by this court in the "trolley stand" case (Thomson-Houston Co. v. Kelsey Co., 75 Fed. 1005, 22 C. C. A. 1), and is not an open question in this court, unless it is proposed to reconsider and overrule that decision. He is not under any implied promise to maintain the machine as an entity, and may do whatever he chooses with any of its parts, as fully as if there had not been a patent.

Let us consider from a practical standpoint what any other rule would lead to in a case like the present. The purchaser here has bought with his machine a sound record, or half a dozen sound records, each having the necessary grooves cut in it to enable him to reproduce for his own pleasure a particular piece of music. The record is a fragile thing which is to be inserted into the machine by the user, and must be adjusted accurately to the vibrating parts, and is to be removed when he wants to reproduce a different piece of music. Any slip of the hand will destroy it. Not only is this so, but its sound producing qualities are lost by the contact of the needle which is vibrated in its grooves long before the machine proper is worn out, and generally early in its normal life. Whenever either of these things happens, a machine, which costs at least $17, is disabled unless a record like one which has been sold with it at the price of 35 cents, and which anybody and everybody has a right to make, may be replaced in the machine in lieu of the useless one. If the owner of the patent stops manufacturing records, or no longer has in the market a record grooved like the one which has been destroyed, what is the purchaser to do if he has not the right to replace a record without the permission of the patent owner? The purchasers of the Victor machine cannot require the Victor Talking Machine Company to supply them with records, and can only procure them from it on such terms as it pleases to exact. If they are not at liberty to procure them elsewhere, the

Digitized by Google

company can dictate how long they are to enjoy the use of their machines.

Such a rule of infringement as is adopted by the majority opinion, not only extends the monopoly of the patent owner to an unprecedented extent, but is subversive of the right of a purchaser of the patented thing to realize its fair measure of usefulness by making necessary reparations or changes by way of improvement.

(154 Fed. 63.)

McCUNE v. BALTIMORE & O. R. CO.

(Circuit Court of Appeals, Third Circuit. May 6, 1907.)

No. 21.

PATENTS—ACTION AT LAW FOR INFRINGEMENT—PROOF OF DAMAGES.

In an action at law to recover damages for the infringement of a patent, where there is no established market value or license fee, general evidence is admissible to show the extent of the plaintiff's damages from the infringement, and he is entitled to show the utility and advantages of the invention over old devices, as a basis from which the jury may estimate the extent of his loss.

[Ed. Note.—For cases in point, see Cent. Dig. vol. 38, Patents, §§ 420, 421.]

In Error to Circuit Court of the United States for the Western District of Pennsylvania.

J. M. Martin, for plaintiff in error.

Robert J. Fisher, for defendant in error.

Before DALLAS, GRAY, and BUFFINGTON, Circuit Judges.

BUFFINGTON, Circuit Judge. In the court below James B. McCune, the plaintiff in error, brought an action at law against the Baltimore & Ohio Railroad Company to recover damages for infringement of a patent granted to him May 18, 1886, for a locomotive ashpan. The patent had expired before suit brought. McCune had never granted a license, established a royalty, or manufactured and sold the patented device. There was testimony tending to prove the defendant infringed the patent. Thereupon the plaintiff offered to prove the utility and advantages of his patented device, that it had been appropriated and used by a number of other railroads, and that this use, being without his consent, prevented the establishment of a market value therefor. This offer the court rejected, and directed a verdict for the plaintiff for nominal damages. Whereupon the plaintiff sued out this writ and assigned for error the rejection of this testimony.

It is clear to us the rejected testimony was in substance the same as that admitted in Suffolk Co. v. Hayden, 70 U. S. 318, 18 L. Ed. 76. There "no sales had been made of the patent right by the plaintiff or of licenses for the use of it, so as to establish a patent or license fee as a criterion by which to ascertain the measure of damages." The court below admitted evidence as to the uses and advantages of this improvement over previous methods of cleaning cotton. In affirming this action Justice Nelson said:

Digitized by Google

"There being no established patent or license fee in the case, in order to get at a fair measure of damages, or even an approximation to it, general evidence must necessarily be resorted to. And what evidence could be more appropriate and pertinent than that of the utility and advantage of the invention over the old modes or devices that have been used for working out similar results? With a knowledge of these benefits to the persons who have used the invention, and the extent of the use by the infringer, a jury will be in possession of material and controlling facts that may enable them, in the exercise of a sound judgment, to ascertain the damages, or, in other words, the loss to the patentee or owner by the piracy, instead of the purchase, of the use of the invention."

The statute of July 8, 1870 (Rev. St. § 4919 [U. S. Comp. St. 1901, p. 3394]), made no change in the rule of damages in actions at law thus established. In Birdsall v. Coolidge, 93 U. S. 69, 23 L. Ed. 802, where Suffolk Co. v. Hayden, supra, was cited with approval, Justice Clifford, referring to the act of 1870 says:

"Where the suit is at law, the measure of damages remains unchanged to the present time; the rule still being that the verdict of the jury must be for the actual damages sustained by the plaintiff."

In Root v. Railway Co., 105 U. S. 198, 26 L. Ed. 975, Justice Matthews made an exhaustive review of the patent statutes and decisions and cited Suffolk Co. v. Hayden as deciding that "in case where there is no established patent or license fee in the case, or even an approximation to it, general evidence must necessarily be resorted to"; and in Tilghman v. Proctor, 125 U. S. 143, 8 Sup. Ct. 894, 31 L. Ed. 664, it was again cited, in a full review of the patent cases bearing on damages, for the proposition that license fees and royalties are generally, "though not always, taken as the measure of damages."

It will thus be seen that Suffolk Co. v. Hayden has been approvingly cited and considered as authority for the principle, therein enunciated, that, in the absence of license fee or royalty, other proof can in an action at law be resorted to, to show the damage done to the owner of the patent. The law thus announced is conclusive of the case before us, unless Suffolk Co. v. Hayden was overruled by the Supreme Court in Coupe v. Royer, 155 U. S. 567, 15 Sup. Ct. 199, 39 L. Ed. 263. Assuredly the case is not overruled by name, and the question there involved and decided does not require a reversal by implication. In that case, which was an action at law, the court below had held "that whatever value has been received by the defendants through the use of this invention, so much has been taken from the plaintiffs, and they are entitled to have it restored to them." The Supreme Court, however, after stating the rule in equity was that the gains and profits of the infringer could be recovered, says:

"At law the plaintiff is entitled to recover, as damages, compensation for the pecuniary loss he has suffered from infringement, without regard to the question whether the defendant has gained or lost by his unlawful acts; the measure of recovery in such cases being, not what the defendant has gained, but what plaintiff has lost."

It was accordingly said:

"It is evident, therefore, that the learned judge applied the wrong standard in instructing the jury that they should find what the defendants might be shown to have gained from the use of the patented invention."

Digitized by Google

It will thus be seen the court below had followed in an action at law the rule of damages applicable only in a case in equity. The Supreme Court reversed on that question. It made no change in the established rule in equity cases for it expressly approved Tilghman v. Proctor. It announced no purpose to change or modify the rule in law cases, and therefore in them Suffolk Co. v. Hayden stands as the settled rule of damages.

Stress is laid, however, upon the extract from the opinion that:

"The evidence disclosing the existence of no license fee, no impairment of the plaintiff's market, in short, no damages of any kind, we think the court should have instructed the jury, if they found for the plaintiffs at all, to find nominal damages only."

We cannot regard this language as at variance with the rule, laid down in the Suffolk Case, that, in the absence of license and royalty fees, other evidence may be received. Indeed, it seems to us it is a recognition of the doctrine of that case, that other evidence may be resorted to in the absence of established royalty and license fees. And that this is the case is shown by the syllabus, which summarizes the decision in the language:

"In an action at law, * * * when the evidence discloses the existence of no license fee, no impairment of the plaintiff's market, no damages of any kind, the jury should be instructed, if they find for the plaintiff, to find nominal damages only."

Holding, then, as we do, that Suffolk Co. v. Hayden is unreversed and unqualified by Coupe v. Royer, it follows the court below erred, its judgment must be reversed, and the case remanded, with directions to grant a new trial.

(154 Fed. 65.)

RUMFORD CHEMICAL WORKS v. HYGIENIC CHEMICAL CO.

(Circuit Court of Appeals, Third Circuit. April 26, 1907.)

No. 18.

PATENTS—SUIT FOR INFRINGEMENT—EVIDENCE.

Evidence in a suit for infringement of a patent *held* insufficient to show that the defendant was privy to a prior suit brought by complainant against others so as to render a deposition taken therein admissible against defendant.

Appeal from the Circuit Court of the United States for the District of New Jersey.

For opinion below, see 148 Fed. 862.

Philip Mauro and C. A. L. Massie, for appellant.

Whitridge, Butler & Rice (Willard Parker Butler and Edwin T. Rice, of counsel), for appellee.

Before DALLAS, GRAY, and BUFFINGTON, Circuit Judges.

BUFFINGTON, Circuit Judge. This is an appeal from a decree entered by the Circuit Court for the District of New Jersey dismissing, for noninfringement, a bill in equity filed by the Rumford Chemical

Digitized by Google

Works which charged the Hygienic Chemical Company of New Jersey with infringement of a patent. The court below held there was no proof of infringement, and there is no error in its so holding, if the testimony of one Clotworthy was rightfully excluded. This excluded deposition of Clotworthy, now deceased, was taken in a suit in the Circuit Court for the Southern District of New York (125 Fed. 231 and 134 Fed. 385, 67 C. C. A. 367), wherein the Rumford Chemical Works, the present appellant, was complainant, and the New York Baking Powder Company et al., respondents. It is alleged the respondent in the present case aided in, and contributed to, the defense of that case. On that point, however, the proofs fail. There is no proof that the present respondent, the Hygienic Chemical Company of New Jersey contributed to the expense of the New York suit or bore the relation of privy or party to that litigation. While the Hygienic Chemical Company of New York did contribute to the defense, and one Heller, who was President of both companies, was a witness in that case, there is no sufficient proof to connect the present respondent with the defense of that case. We are therefore of opinion the court below rightly excluded Clotworthy's testimony.

The decree of the court is affirmed.

(154 Fed. 66.)

HOGAN v. WESTMORELAND SPECIALTY CO. et al.

(Circuit Court of Appeals, Third Circuit. April 26, 1907.)

No. 12.

1. PATENTS—INVENTION—ADJUDICATION OF INVALIDITY ON DEMURRER.
   A patent should be adjudged void on demurrer for lack of patentable invention apparent on its face only in exceptional cases, where the question is free from doubt.

2. SAME—DREDGE FOR SALT OR PEPPER.
   The Hogan patent, No. 752,903, for a dredge for salt or pepper, is not so manifestly devoid of invention on its face as to warrant its being declared void on demurrer to a bill for its infringement.

Appeal from the Circuit Court of the United States for the Eastern District of Pennsylvania.

For opinion below, see 145 Fed. 199.

E. M. Marble, for appellant.

Howard P. Denison and William A. Jones, for appellees.

Before GRAY and BUFFINGTON, Circuit Judges, and LANNING, District Judge.

BUFFINGTON, Circuit Judge. The court below sustained a demurrer to the bill on the ground the patent was on its face void for lack of patentable novelty. While such decree may be entered where a case is clear from doubt, we are of opinion the present was not one of that character. It resembles the cases of Caldwell v. Powell, 73 Fed. 488, 19 C. C. A. 592, and Chinnock v. Paterson, 112 Fed. 531, 50 C. C. A. 384. Following our decisions in those cases, we here

Digitized by Google

hold the demurrer should be overruled, and the questions involved decided on final hearing.

The decree of the lower court is therefore reversed, and the case remanded to the Circuit Court, with instruction to allow the appellees time within which to answer.

(154 Fed. 196.)

UNITED STATES v. HERRMANN. SAME v. SAKS & CO. SAME v. LEON RHEIMS CO.

(Circuit Court of Appeals, Second Circuit. January 17, 1907.)

Nos. 133–135 (3,752, 3,970, 3,753).

CUSTOMS DUTIES—PRODUCTION OF SAMPLES—EVIDENCE.

In proving the character of imported merchandise, it is not essential that actual samples of the importations should be produced. Such proof may be supplied by witnesses familiar with the goods, testifying from their recollection as to the invoice descriptions.

Appeals from the Circuit Court of the United States for the Southern District of New York.

For decision below, see 145 Fed. 843, reversing decisions of the Board of United States General Appraisers, which had affirmed the assessment of duty by the collector of customs at the port of New York.

The merchandise in controversy was found by the court below to be similar to that passed upon previously by the same court in Herrmann v. U. S. (C. C.) 141 Fed. 486, consisting of so-called beaver strips or bands, which were there held dutiable as manufactures of fur, under Tariff Act July 24, 1897, c. 11, § 1, Schedule N, par. 450, 30 Stat. 193 [U. S. Comp. St. 1901, p. 1678]. In these appeals the government has not questioned the correctness of that classification, but contends that the evidence on which the court below based its conclusion of similarity of the merchandise to that in the former Herrmann Case, supra, and the assignments of error, are limited to this point.

The evidence the sufficiency of which is at issue consisted of testimony of the importers or their employés, who were familar both with the importations in controversy and with their invoice descriptions, and who on examination of the exhibits in said Herrmann Case stated that the goods were similar to such exhibits. Actual samples were not produced, and this evidence was based on the recollection of the witnesses as to the character of the goods represented by the invoice description of the various items, which had been imported two years or more previously. The government urged that, in view of the failure of the importers to produce samples of the goods, and the fact that the testimony of the importers was based on an inspection of the invoices, there was no competent evidence to sustain the conclusion of the Circuit Court.

J. Osgood Nichols, Asst. U. S. Atty.

Comstock & Washburn (Albert H. Washburn, of counsel), for importers.

Before WALLACE, LACOMBE, and COXE, Circuit Judges.

PER CURIAM. Decrees affirmed in open court.

Digitized by Google

(154 Fed. 197.)

BROOKFIELD et al. v. ELMER GLASS WORKS.

(Circuit Court of Appeals, Third Circuit. May 24, 1907.)

No. 4.

PATENTS—INFRINGEMENT—PRESS FOR MAKING SCREW INSULATORS.

The Kribs patent, No. 542,565, for a press for making screw insulators, *held* not infringed.

Appeal from the Circuit Court of the United States for the District of New Jersey.

For opinion below, see 144 Fed. 418.

Robert N. Kenyon and Wm. H. Kenyon, for appellants.

Joseph C. Fraley, for appellee.

Before DALLAS, GRAY, and BUFFINGTON, Circuit Judges.

DALLAS, Circuit Judge. This is an appeal from a decree in a patent suit (144 Fed. 418), in which the appellants were the complainants, and the appellee was the defendant. The defendant was charged with infringement of patent No. 542,565, dated July 9, 1895, issued to Seraphin Kribs, assignor to William Brookfield, for a "press for making screw insulators." The claims involved are as follows:

"2. An actuating rod provided with a detachable screw plunger, combined with a rotary spindle adapted to engage the screw plunger, a mold, and a movable support for the mold substantially as described.

"3. An actuating rod provided with a detachable screw plunger, combined with a rotary spindle adapted to engage the screw plunger, a mold, a movable support for the mold, and a lock for holding the support with the mold in operative position relatively to the actuating rod and spindle substantially as described."

The single question raised by the assignment of errors is whether the press known in the case as "the first form of defendant's press" conflicts with these claims. They need not be considered separately, or at length. The added "lock" of the third claim is its only distinctive feature. Apart from this, they are for the same combination of devices, all of which were old; and the defendant's press as a whole essentially differs from the organized machine of the patent. It has screw plungers, it is true, but it has none which is, or need be, "detachable"; whereas, the plunger of the patented combination is both specified and required to be so. This variance is obviously substantial, and the very able argument of the appellants' counsel has failed to convince us that it should be disregarded. The meaning of the word "detachable" is not doubtful, and the record discloses nothing which, in our opinion, would warrant its effacement from these claims.

The decree of the Circuit Court is affirmed.

Digitized by Google

(154 Fed. 177.)

THE CUZCO.

(Circuit Court of Appeals, Second Circuit. April 30, 1907.)

(No. 217.)

1. SEAMEN—INJURY IN SERVICE—DUTY OF VESSEL IN RESPECT TO MEDICAL ATTENTION.

When the deviation of a vessel from her course in order to procure medical attention for an injured member of the crew would add substantially to the risks of the voyage, there must be some substantial exigency to justify it; at least reasonable ground to believe that consequences more serious than the mere pain and suffering which ordinarily attend the smaller catastrophes of a sailor's life are to be expected.[1]

2. SAME—LIABILITY OF VESSEL.

Libelant, cook on a steamship, was injured while the vessel was lying in Fortescue Bay, Straits of Magellan, by falling through a hatchway; his shoulder being dislocated and his head injured, the latter injury not being serious. The injuries were examined and treated by the master and steward, who decided that there was no dislocation of the shoulder, but merely a sprain, and the vessel proceeded on her course to the westward until she reached Coronel, 1,100 miles distant, when surgical treatment was obtained. The time ordinarily required to reach such port was 5 days, but owing to bad weather it took 7 or 8 days. By returning upon her course 70 miles in the Straits to Punta Arenas, medical aid could have been obtained. *Held* that, in view of the belief of the master, after examination, that the injury was not serious, and of the dangers of navigation of the Straits in the winter season, the decision of the master to continue the voyage, rather than expose the vessel and cargo to the risks of a return, was not unreasonable, and did not subject the vessel to liability.

[Ed. Note.—For cases in point, see Cent. Dig. vol. 43, Seamen, § 43.]

Appeal from the District Court of the United States for the Eastern District of New York.

This cause comes here upon appeal from a decree of the District Court, Eastern District of New York, in favor of libelant. The suit was brought by the cook of the steamship Cuzco to recover damages for injuries sustained by a fall through a coal bunker hatch while the vessel was in the Straits of Magellan on August 24, 1903. The district judge found the vessel free from fault, so far as the accident itself was concerned, but held that it was the duty of the master to have retraced his course 70 miles to Punta Arenas, so as to secure medical advice and assistance; that his failure to do so "probably aided the resulting abnormal condition of the libelant's arm, and added to his pain and discomfort"; and he held the steamer liable in the sum of $1,500 as a proper compensation therefor. The opinion below will be found in 148 Fed. 914.

J. Parker Kirlin and Charles R. Hickox, for appellant.
B. B. Coyne and Abbott & Coyne, for appellee.

Before WALLACE, LACOMBE, and TOWNSEND, Circuit Judges.

LACOMBE, Circuit Judge. We recently had occasion to consider the subject of a shipmaster's duty when a member of his crew is injured while the vessel is at sea or remote from medical aid. Greco v. The Sarnia, 147 Fed. 106, 77 C. C. A. 332. That case, however,

[1] See note at end of case.

Digitized by Google

differs from the one at bar because medical advice was procurable as quickly by going forward as by deviating.

The situation of the vessel at the time libelant sustained his injury was as follows: She was bound from New York to Valparaiso, Callas, and other west coast South American ports, through the Straits of Magellan. Her first stop was Punta Arenas, located in the Straits 130 miles from the eastern entrance. Her next stop was to be at Coronel, on the west coast to the north of the Straits. At the time the accident happened, the Cuzco lay at anchor at Fortescue Bay, 70 miles beyond Punta Arenas, and 120 miles from the western entrance; Coronel being distant about five days sailing. Two days sailing apparently would carry her out of the Straits. A note on the chart says:

"In proceeding into the Pacific, ships should not attempt to clear the Strait in one day from Port Gallant [the head of Fortescue Bay], but endeavor to get into Playa Parda or Port Tamar before dark. * * * As the W. and S. W. gales come on very suddenly and without warning, it is impossible to run back and find an anchorage during a dark night."

The master had anchored owing to bad weather—a snowstorm the previous day and during that night. The passage through the Straits is manifestly more perilous for a steamer than navigation in the open ocean, and was a risk undoubtedly considered when the voyage was provided for. A significant "caution" is printed on the chart:

"As there has been no complete survey of Magellan Strait, the navigator is cautioned that although this chart may be considered a sufficient guide by daylight, he must not too implicitly trust in it during thick weather, as in some few instances the bearings from headland to headland are not strictly accurate."

It should be borne in mind that when the master was called upon to decide whether he should go on or turn back with the libelant, and thus add 140 more miles of dangerous navigation to the risks of the adventure, he had to take into consideration all the various interests which were committed to his charge. He was called upon to exercise sound judgment, not indeed on a question of pure seamanship, but on a question which involved maritime knowledge. A deviation for the purpose of succoring the distressed has been held not to release underwriters of ship or cargo who have insured for a specified voyage, but "to make such excuse valid and effectual it must without doubt be shown that there was a real necessity for the departure of the vessel from her proper course. The exigency which demands relief must be equal in importance to the intervention which is required in its behalf." Perkins v. Augusta Ins. & B. Co., 76 Mass. 312, 71 Am. Dec. 654. Arnould expresses the rule thus:

"The state of circumstances must be such as to leave the master no alternative, as a reasonable and prudent man, exercising a sound judgment, and acting for the best interests of all concerned, but to depart from or delay the usual course of the voyage." Marine Insurance (6th Ed.) vol. 1, p. 501.

This is, perhaps, rather strongly expressed, but there can be no doubt that, when the deviation adds substantially to the risks of the voyage, there must be some substantial exigency to justify it; there must be reasonable ground to believe that consequences more serious

Digitized by Google

than the mere pain and suffering which ordinarily attend the smaller catastrophes of a seaman's life are to be expected. When sitting in review, therefore, of the conclusion of the master reached on the morning of the accident, we should not lose sight of the fact that he had charge of a valuable ship and cargo, presumably insured under policies of the terms of which he was ignorant. Moreover, it is the decision made on that particular morning which is under review. By the next day the Cuzco would be so near the western outlet of the Straits that no one would contend that she should turn back for Punta Arenas through that imperfectly charted waterway, where snow or thick weather for two days (it was the winter season) might so delay her that she might reach that port no sooner than she might reach Coronel if she kept on.

Before discussing the facts, it may be convenient to review the authorities, so as to see what circumstances have been held sufficient to call for a deviation by the master in order to succor or relieve a member of the crew. While the Iroquois was rounding Cape Horn, libelant accidentally fell from the main yard to the deck, fracturing two ribs and his right leg in two places. The master with the aid of the carpenter set the leg in splints, kept the libelant in his berth, and after five weeks removed the splints, and found the leg apparently in good condition. Before arriving at San Francisco he was able to leave his berth, go on deck, and walk about with the aid of a crutch. But after arrival there it was found that, while his ribs had healed perfectly, the bones of his leg had not united, and amputation became necessary. It was held that the master should have put into Valparaiso, which would have caused five or six days' detention. In the course of the opinion it is suggested that each case depends so largely upon its own particular facts that the rule laid down in one may afford little or no aid in determining another. The court is bound, as far as possible, to put itself in the master's place, and inquire whether, in view of all the circumstances, he was bound to put into an intermediate port. "A seafaring life," says the court, "is a dangerous one; accidents of this kind are peculiarly likely to occur, and the general principle of law that a person entering a dangerous employment is regarded as assuming the ordinary risks of such employment is peculiarly applicable to the case of seamen." The Iroquois, 194 U. S. 240, 24 Sup. Ct. 640, 48 L. Ed. 955. In Brown v. Overton, 1 Spr. 462, Fed. Cas. No. 2,024, a seaman fell from aloft and broke both legs. The vessel was bound from Calcutta to Boston. Twenty-five days later she made St. Helena, distant above 40 miles, and it was held that she should have landed him there. In Peterson v. The Chandos (D. C.) 4 Fed. 645, libelant fell from aloft and broke his thigh bone; he also broke his collar bone and received a severe cut in the head. The master did not discover that the thigh bone was broken until some weeks after the accident. It was held that, if the ship could have made a port in five or six days, the master should have done so. In Olsen v. The Scotland (D. C.) 42 Fed. 925, there was no question of deviation. Libelant fell from the ladder when coming aboard at Antwerp, where he shipped. He notified the captain a few hours later, and the ship was held because when the vessel reached Flush-

Digitized by Google

ing, where she lay two days, no medical advice was obtained. In Whitney v. Olsen, 108 Fed. 292, 47 C. C. A. 331, the mate of a fishing schooner was struck by the main boom, and his leg broken in two places. There was no one on board competent to treat such an injury. "There was no cargo on board, no danger of loss or damage on that account, the wind was fair and favorable, no peril to the ship," and it was held he should have gone to Port Townsend, 500 miles distant. In The Troop (D. C.) 118 Fed. 769, on appeal 128 Fed. 856, 63 C. C. A. 584, a seaman fell from the yard arm to the deck, fracturing his left arm and right thigh. The vessel was departing from the port of Fusan bound for Puget Sound, and had made only six miles from her anchorage in the inner harbor. The weather was calm. The captain, instead of sending him to the hospital at Fusan, undertook to treat the case himself, and shamefully neglected it. The ship was held liable. In The Eva B. Hall (D. C.) 114 Fed. 755, a seaman had his left forearm broken by a blow from a capstan bar while on a voyage from Fernandina to New York. There was no claim that the vessel should have put in anywhere. The court remarked that the master could not be expected to know positively that the arm was broken, but that the libelant told him it was broken and it was swollen and inflamed. The ship was held liable because, under these circumstances, the master threatened to put the wounded man in irons, and forced him, without necessity, to perform duties which would naturally result in an aggravation of the injuries. In Danvir v. Morse, 139 Mass. 323, 1 N. E. 123, the libelant broke his leg soon after 1 a. m., when the vessel was not far from the entrance to Chesapeake Bay. Three hours later she passed within six miles of Fortress Monroe, with a fair wind for that place or Norfolk, but the captain refused to land him at either place, but carried him on 170 miles further to Washington. The ship was held liable. In Campbell v. The Frank Gilmore (D. C.) 43 Fed. 318, where the vessel was not held liable, the court says:

> "The steward of the boat looked after the libelant, and I think it is satisfactorily shown that he gave him reasonable attention. The steward examined the injured leg, and his judgment was that the injury was not at all serious, and simple remedies were applied with beneficial results. All the officers believed that the hurt was but a simple sprain. True, when the marine surgeon at Pittsburgh came to examine the libelant's leg he found that he had sustained a partial lateral dislocation of the knee joint, but this was not apparent to unprofessional persons, and the officers of the boat had no reason to suspect that the accident was so serious. The libelant's own conduct at the time indicated that he did not regard the injury as a serious affair."

In The Kenilworth (D. C.) 137 Fed. 1003, affirmed by the Court of Appeals in the Third Circuit (144 Fed. 376, 75 C. C. A. 314, 4 L. R. A. [N. S.] 49), the libelant had been thrown by a heavy sea against the steam winch, and had broken his thigh bone. The accident happened to the northward and eastward of Cape Horn, and the vessel continued on her course to Philadelphia without touching at any of the South American ports. She came nearest to the land off Pernambuco, Brazil. The master examined the seaman, and came to the conclusion that the latter's leg was not broken, because there was no apparent movement of the parts of the bone, nor did he hear any grating noise or crepitus, and because the injured man was able to

Digitized by Google

move his toes and foot. He supposed such movement was impossible with a broken leg, in which supposition he was entirely mistaken. The Court of Appeals says:

"* * * The fact that the master did not perceive that Krelly's leg was broken is of primary and controlling importance. * * * That he was mistaken as to the true nature of the injury is now perfectly plain, but we concur in the finding of the court below that the opinion upon which he acted was honestly entertained by him. * * * In considering whether he was or was not duly careful, we are bound, so far as possible, to put ourselves in his place. He was not required to have the skill or discernment of a surgeon, and the opinion which he formed, if viewed in no clearer light than was afforded by such limited knowledge as may be justly attributed to him, does not appear to be an unreasonable one, and the treatment which he adopted, when considered in connection and conformity with that opinion, was neither negligent nor improper."

The accident in the case at bar happened a little after 4 a. m. Michael was found by the second cook lying unconscious where he had fallen, and was picked up and put in a berth. The steward was notified about 4:30 a. m. He hurriedly dressed himself, and went to investigate. He found Michael stunned, got him up and spoke to him, and washed his head out, whereupon he came to, and told how the accident had happened. The master was busy in the early morning getting the ship under way, and visited libelant about 7 a. m. He and the steward got him out of the berth, put him on a box, took off his shirt and examined him. There was a cut on his forehead, which was not bleeding at the time. The steward had already washed it out thoroughly with water containing a few drops of carbolic acid, and had cleaned it, picking out what coal and dirt he could find, and putting a plaster across it. There was a similar cut and bruise on the back of the head, which was similarly cared for. He was perfectly conscious, told the captain about the accident, and said he felt no particular pain except in his shoulder. The captain reached the conclusion that the injuries to the head were merely superficial scalp wounds —a correct diagnosis, for, except for pain in the process of dressing and healing, they gave him no further trouble. He complained of great pain in his shoulder, which was much swollen, especially when he moved it, and the captain made an examination, to discover if there were a dislocation, intending if there were one to reduce it himself. He had set broken bones before, but never reduced a dislocation. He expected to find a lump under Michael's arm if his shoulder had been out of place, but there was no lump there. The doctor explained to him at Coronel that it was on account of the shoulder being upwards instead of downwards; that if it had been downwards there would be a lump shown under the arm, but being upwards it was not. Having reached the conclusion that the libelant was suffering only from a severe sprain, the captain continued on his voyage for Coronel. The steward bathed his shoulder, put a roll under the arm, and bandaged it; he put opadildock on and turpentine liniment, and gave him turpentine liniment to put on the shoulder. The steward says he applied the liniment two or three times a day, and that at first Michael said he felt better, but later said he was sure his shoulder was out. Libelant said the steward visited him only twice before reaching

Digitized by Google

Coronel, and that he stayed in his berth four days. Whichever is correct, he certainly was put to no work until he saw the doctor at Coronel, who put him under chloroform, and reduced the dislocation. Libelant is now suffering from "ankylosis in the shoulder due to a dislocation sometime previous." Whether delay in reducing such dislocation, as the district judge found, "probably aided the resulting abnormal conditon of the libelant's arm" is not altogether clear upon the proofs. But whether it did or not, we are not satisfied that conditions were such on the morning of the accident that the master should be held in fault because he did not turn back to Punta Arenas, exposing ship and cargo to 140 additional miles of navigation through Magellan Strait in midwinter.

The decree of the district court is reversed, and cause remanded, with instructions to dismiss the libel.

NOTE.

Rights and Liabilities of Seamen as to Medical Treatment.

I. In General.

[a] A seaman receiving an injury in the performance of his duty must be cured at the expense of the ship.

—(U. S. 1901) Whitney v. Olsen, 108 Fed. 292, 47 C. C. A. 331; (1880) Longstreet v. The R. R. Springer (D. C.) 4 Fed. 671; (1833) Holmes v. Hutchinson, Fed. Cas. No. 6,639 [Gilp. 447]; (1859) Brown v. Overton, Fed. Cas. No. 2,024 [1 Spr. 462]; (1871) Callon v. Williams, Fed. Cas. No. 2,324 [2 Low. 1]; (1873) Brown v. The Bradish Johnson, Fed. Cas. No. 1,992 [1 Woods, 301]; (1876) Jackson v. The Fleta, Fed. Cas. No. 7,135;

(Wash. 1903) Sanders v. Stimson Mill Co., 32 Wash. 627, 73 Pac. 688, judgment reversed on rehearing (1904) 34 Wash. 357, 75 Pac. 974.

[b] By maritime law, a seaman falling sick during the voyage is to be cured at the expense of the vessel.

—(U. S. 1799) Swift v. The Happy Return, Fed. Cas. No. 13,697 [1 Pet. Adm. 253]; (1822) The Nimrod, Fed. Cas. No. 10,267 [1 Ware, 9]; (1837) The Forest, Fed. Cas. No. 4,936 [1 Ware, 420]; (1854) Brunent v. Taber, Fed. Cas. No. 2,054 [1 Spr. 243];

(Ohio, 1879) Moseley v. Scott (Super. Ct. Cin.) 3 Ohio Dec. 449, 5 Am. Law Reg. (N. S.) 599.

[c] (U. S. 1904) Under the general maritime law, as recognized and administered by the admiralty courts of the United States, a seaman may maintain a suit in rem to recover damages caused by the failure of a master to furnish him with proper care, treatment, and supplies after his accidental injury in the service of the ship—the duty being one which rests upon the ship, in respect to which the master represents the owners; and neither the British admiralty decisions, nor the English merchants' shipping act, deny such right, although in matters relating to the navigation of the ship the English decisions treat the master and crew as fellow servants. Decree (D. C. 1902) 118 Fed. 769, affirmed.—The Troop, 128 Fed. 856, 63 C. C. A. 584; Kenney v. Louie, Id.

[d] (U. S. 1904) Under the maritime law of the United States a suit may be maintained by a seaman against the ship to recover damages for the neglect of the master to furnish him proper care and medical attendance after he was injured by being assaulted by the master.—The Matterhorn, 128 Fed. 863, 63 C. C. A. 331.

[e] (U. S. 1906) It is the duty of the shipowners to provide proper medical treatment and attendance for seamen suffering injury in the service of the ship, and of the master, where a serious accident occurs, to exercise a reasonable judgment as to putting into the nearest available port, but whether or not

Digitized by Google

these duties have in any instance been adequately discharged is to be determined with reference to the peculiar facts of the particular case.—The Kenilworth, 144 Fed. 376, 75 C. C. A. 314, 4 L. R. A. (N. S.) 49.

[f] (U. S. 1907) Where a fireman on a tug was injured in the course of his employment, the fact that the tug was engaged in comparatively short coastwise trips did not relieve her from the usual obligation of a vessel to her crew to furnish care and maintenance to effect a cure. Decrees (D. C. 1905) 138 Fed. 941, and (D. C. 1906) 145 Fed. 446, affirmed.—The Mars, 149 Fed. 729, 79 C. C. A. 435.

[g] (U. S.) When a seaman, while in the discharge of his duty, is injured by reason of the neglect or carelessness of an officer of the boat, the boat is liable for his subsistence and medical attendance until restored.—(1881) The Centennial (C. C.) 10 Fed. 397, 4 Woods, 50; (1871) Myers v. The Lizzie Hopkins, Fed. Cas. No. 9,993 [1 Woods, 170].

[h] (U. S. 1895) The master of a vessel derives all his authority from his appointment by the owners, and they are responsible for his failure to give a seaman proper care while sick.—Gabrielson v. Waydell (C. C.) 67 Fed. 342.

[i] (U. S. 1880) The hospital service of the United States is not intended to supersede the marine law, which imposes an obligation on a vessel to take care of a seaman falling sick or becoming injured in its services, but only auxiliary thereto.—Peterson v. The Chandos (D. C.) 4 Fed. 645, 6 Sawy. 544.

[j] (U. S. 1883) If after a seaman is wounded the officers of the vessel neglect to furnish proper treatment, the vessel may be held for consequential injuries.—The City of Alexandria (D. C.) 17 Fed. 390.

[k] (U. S. 1885) Libelant, a seaman on the schooner W., was hurt in the service of the vessel at Havana. He was then discharged on the application of the master by the consul, who collected for him one month's extra wages. This together with his arrears of wages, amounting together to $41.73, was afterwards applied by the consul to the expenses of his cure and return. On suit brought against the vessel to recover his wages to the end of the voyage, *held*, that the vessel was liable for the expense of his cure; that libelant, having paid it out of his wages, should be considered as having advanced it to the ship, and was entitled to recover it in this action: that the form of the libel should be deemed amended to correspond with the proof, and decree given for $41.73.—The W. L. White (D. C.) 25 Fed. 503.

[l] (U. S. 1887) It is the duty of a master to procure any medical attendance that may be available, at ports where the vessel touches, for the benefit of seamen injured, where there is reasonable evidence of a necessity for it. —The Vigilant (D. C.) 30 Fed. 288.

[m] (U. S. 1888) Libelant was injured on a voyage from New York to Spain. He testified that, on arrival in a port of Spain, he insisted on hospital treatment there, which the master refused. The master testified that libelant had preferred to return with the vessel to New York. His injury was a peculiar one. The result of skillful treatment rendered it doubtful whether it would be better for him to have been left in a Spanish hospital. *Held*, that he could not recover.—The Harry Buschman (D. C.) 33 Fed. 558.

[n] (U. S. 1890) The failure of a freighting vessel to provide a physician or nurse for a sick sailor during a voyage is no neglect of the duty owed to the seaman by the shipowner.—The Wensleydale (D. C.) 41 Fed. 602.

[nn] (U. S. 1890) A sailor, in boarding his ship at Antwerp, fell and dislocated his shoulder. Although he soon afterwards informed the master of the accident, he received no attention at the time, and was not put ashore at Flushing, or at the Downs, as he requested, at both of which places the vessel stopped, but was taken on the voyage to New York, where, on going to the hospital, resection was found necessary in order to reduce the dislocation, to his permanent injury. *Held*, that the master had failed in the ordinary maritime obligation to provide for the seaman's hurts while in the service of the ship, and that the vessel was liable for the damages, which were fixed at $1,250.—The Scotland (D. C.) 42 Fed. 925.

[o] (U. S. 1832) A seaman, whose feet are frozen while in the ship's boat, in the service of the ship, before he is discharged from the ship on the return voyage, at the home port, is entitled to be cured at the ship's expense;

Digitized by Google

and it is a charge on the ship.—Reed v. Canfield, Fed. Cas. No. 11,641 [1 Sumn. 195], affirming Canfield v. Reed (1832) Fed. Cas. No. 2,381.

[oo] (U. S. 1832) Where a seaman's feet were frozen while in the ship's boat in the service of the ship, before he was discharged from the ship on the return voyage at the home port, the omission of such seaman to make any claim for more than a year for the expenses of his cure does not affect his right to reimbursement.—Reed v. Canfield, Fed. Cas. No. 11,641 [1 Sumn. 195], affirming Canfield v. Reed (1832) Fed. Cas. No. 2,381.

[p] (U. S. 1848) Under the rule that a seaman is entitled to be cured, at the expense of the ship, of sickness, hurts, wounds, etc., incurred in the service of the ship, the phrase "service of the ship" is not confined in meaning to acts done for the benefit of the ship, or in the actual performance of the seaman's duty. A sailor must, in judgment of law, be deemed in the service of the ship while under the power and authority of its officers; and he is entitled to be cured at the expense of the ship of any injury received by him in executing an improper order, or inflicted upon him directly by the wrongful violence of an officer of the ship in the exercise of his authority as officer to punish him.—Ringgold v. Crocker, Fed. Cas. No. 11,843 [Abb. Adm. 344].

[q] (U. S. 1867) A seaman who has received an injury or contracted a disease while in the service of the ship is entitled to be cured or cared for at the expense of the ship. This right is an ingredient in the compensation to be paid to the seaman under the contract of shipment, and is enforced by an award of additional wages.—The Ben Flint, Fed. Cas. No. 1,299 [1 Abb. (U. S.) 126, 1 Biss. 562].

[r] (U. S. 1872) The cost of the recovery of a mariner injured while in the service of the ship is a charge against the ship, and may be recovered in a proceeding in rem, and, if he is injured through the neglect or misconduct of the owners or officers of the vessel, he will be allowed damages in the nature of additional wages, to be recovered in the same manner.—Brown v. The D. S. Cage, Fed. Cas. No. 2,002 [1 Woods, 401].

[s] (U. S. 1872) The rule that a seaman injured while in the service of a ship is entitled to medical treatment at the expense of the ship, and without deduction therefor from his wages, extends to a fireman employed on board a steamer.—The North America, Fed. Cas. No. 10,314 [5 Ben. 486].

[t] (U. S. 1877) By an abandonment of the ship's service without necessity, a sick seaman relinquishes his right to be cured at the ship's expense.—The Cambridge, Fed. Cas. No. 2,335 [4 Sawy. 252].

[u] (Mass. 1885) Although a seaman may not recover for an injury received in the course of his regular service, yet recovery may be had by him against his employer for an aggravation of the injury by neglect to give him proper medical attendance, and to perform other acts necessary for his welfare.—Danvir v. Morse, 139 Mass. 323, 1 N. E. 123.

[v] (N. Y.) The fact that the captain sailed a ship on shares is not a defense to an action by a seaman against a part owner for the captain's failure to afford him proper surgical treatment.—(1884) Petersen v. Swan, 50 N. Y. Super. Ct. (18 Jones & S.) 46; (1886) Id., 53 N. Y. Super. Ct. (21 Jones & S.) 151.

[w] (N. Y. 1885) The owners of a vessel are liable to a seaman for neglect of the master to furnish suitable surgical attendance.—Scarff v. Metcalf, 36 Hun, 202.

[x] (Ohio, 1865) A seaman engaged on a steamboat on the Western rivers is entitled to the same privileges as merchant seamen on foreign voyages, and hence, where a seaman becoming suddenly ill while on board such a steamboat is not given such medical aid and attendance as are suitable to the treatment of his disease, whereby he is physically incapacitated for work and labor in the future, he may recover damages for the injuries sustained.—Moseley v. Scott, 3 Ohio Dec. 449.

[y] (Pa. 1883) The right of a seaman to receive medical attendance and medicines at the cost of the vessel when sick or injured, during the term of his service, under the maritime law, is not taken away or limited by Rev. St. §§ 4885, 4803, providing for the collection from vessels of 40 cents per month for each seaman as a fund for the relief of sick or disabled seamen,

Digitized by Google

and appropriated for the expense of the marine hospital service.—Holt v. Cummings, 102 Pa. 212, 48 Am. Rep. 199.

II. EFFECT OF EMPLOYMENT ON SHARE IN EARNINGS OF VESSEL.

[a] (U. S. 1849) A mariner receiving injury in the performance of his duty is entitled to be treated and cured at the expense of the ship, and this is equally true whether his compensation is by specific money wages, or by a share in the earnings of the vessel.—The Atlantic, Fed. Cas. No. 620 [Abb. Adm. 451].

[b] (U. S. 1855) Fishermen on mackerel voyages, in licensed and enrolled vessels, are entitled to be cured at the vessel's expense, though they are paid in proportion to their individual catches. Strong evidence of a custom to the contrary is insufficient to take away the right.—Knight v. Parsons, Fed. Cas. No. 7,886 [1 Spr. 279].

III. PROPRIETY AND SUFFICIENCY OF TREATMENT.

[a] (U. S. 1890) The libelant, a deck hand, while at work on a steamboat, accidentally fell and injured his leg. The steward examined the limb, and thought the hurt was not serious, and applied simple remedies. All the officers of the boat supposed it was a sprain. Two days afterwards the boat reached Cincinnati. The libelant did not ask to be sent to the marine hospital there, nor for a surgeon. On the uptrip, by orders, he did some light work, but without compulsion. Eleven days after the accident he entered the marine hospital at Pittsburg, and it turned out that he had sustained a partial lateral dislocation of the knee joint, and he was likely to be permanently disabled. There was evidence that he did not receive proper attention at the hospital. *Held*, that he had no cause of action against the owners of the boat.—Campbell v. The Frank Gilmore (D. C.) 43 Fed. 318.

[b] (U. S. 1902) Where a British ship was leaving a port where there was a hospital, having made but six miles from her anchorage, libelant, who was a seaman, fell to the deck, and was severely injured; fracturing the bones of his thigh and arm. Instead of sending libelant to the hospital, the captain undertook to reduce the fractures, and then sent libelant to his bunk in the forecastle, and continued the voyage, giving him no further attention until reaching another port, 36 days later. The bunk in which libelant was placed was unsuitable for one in his condition, and he was given very little attention, and neither proper care nor nursing, in consequence of which he suffered intensely. As a result of the captain's malpractice, he was compelled to undergo severe surgical treatment after reaching a hospital, and was permanently disabled. *Held*, that the captain was guilty of gross inhumanity, and violation of the duty imposed on him by libelant's contract for service, which rendered the ship liable in damages for libelant's suffering and permanent injury, assessed by the court at $4,000.—The Troop (D. C.) 118 Fed. 769.

[c] (Mass. 1899) Plaintiff, a seaman, froze his hand while obeying the orders of the master of the ship. The steward put plaintiff's hand in cold water, and scraped a potato, which was put on his hand; but there was nothing to show whether the latter act was beneficial. Plaintiff was warned not to go near the fire. Nothing more was done until the end of the voyage, five days later, when two of plaintiff's fingers had to be amputated. The usual plan of treatment for a frozen hand is to bathe it in ice-cold water, give an internal stimulant, and in a few hours increase the temperature, gradually bringing the frozen part into contact with ordinary temperature. The physician who afterwards treated the hand testified that he used oil on it to soothe the pain, and that it was proper treatment in case of frostbites; but it was not shown that the application of oil would have had any effect in curing the frostbite, or in preventing the injury which resulted; nor was it shown that the application of oil was known to the master, or was so commonly used for such purpose that he should have known of it. *Held*, that the master did not fail to provide proper treatment, so as to be liable in damages.—Johnson v. Holmes, 173 Mass. 514, 53 N. E. 1000.

[d] (N. Y. 1886) A captain does not fail in his duty to give proper surgical treatment to a sailor by erring in judgment—by permitting splints, for in-

Digitized by Google

stance, to remain longer than they should, although the effect of the error is injurious to the sailor.—Petersen v. Swan, 53 N. Y. Super. Ct. (21 Jones & S.) 151.

IV. SUPPLYING VESSEL WITH MEDICINE CHEST.

[a] (U. S. 1822) Act July 20, 1790 (1 Stat. 134), exempts the vessel and owners from the charges for medical advice and attendance, provided there is a medicine chest on board with suitable medicines and directions for using them. But before the owner can claim the exemption, he must prove that such a medicine chest was provided.—The Nimrod, Fed. Cas. No. 10,267 [1 Ware, 1].

[b] (U. S. 1823) A stipulation that the seamen shall pay for medical advice and medicines, without any condition that there shall be a suitable medicine chest, etc., is void, as contrary to the policy of the act of Congress requiring ships to carry such a medicine chest. No stipulation contrary to the maritime law, to the injury of seamen, will be allowed to stand, unless an adequate additional compensation be given to them.—Harden v. Gordon, Fed. Cas. No. 6,047 [2 Mason, 541].

[c] (U. S. 1833) An answer, averring, in general terms, that a vessel was supplied with a medicine chest according to law, is not, of itself, sufficient evidence to discharge a master from his liability for a physician's bill for attendance on a sick seaman, and an express promise by the seaman to the master to pay the bill for such attendance is without consideration.—Freeman v. Baker, Fed. Cas. No. 5,084 [Blatchf. & H. 372].

[d] (U. S. 1833) Where a seaman, in a foreign port, contracts an ordinary disease, without any fault of his own, and remains on board a vessel which is properly provided with a chest of medicines, the expenses for the advice and attendance of a physician, if evidently necessary for the safety of his life, are to be deducted from his wages.—Holmes v. Hutchinson, Fed. Cas. No. 6,639 [Gilp. 447].

[e] (Me. 1842) By the acts of Congress, if a vessel be furnished with a chest of medicines, accompanied with proper professional directions for administering them, in accordance with the provisions of these acts, the bill of the physician for attendance upon a seaman sick on board, at a port, is to be paid by such seaman.—Pray v. Stinson, 21 Me. (8 Shep.) 402.

[f] (Me. 1842) Under Act Cong. 1790, c. 29, § 8, requiring that certain vessels shall be provided with a chest of medicines, accompanied by proper professional directions for administering them, and in default thereof that the master shall pay for all advice or attendance of physicians, if the vessel be furnished with a chest of medicines, accompanied with proper professional directions for administering them, the bill of the physicians for attendance on a seaman sick on board at a port is to be paid by such seaman, and his request to be removed on shore could not change the rights of the parties; neither is the rule changed whatever may be the nature of the disease, though it be of a violent and dangerous kind.—Pray v. Stinson, 21 Me. (8 Shep.) 402.

V. TIME OF TREATMENT.

[a] (U. S. 1904) A seaman is not entitled to recover from the owner of the vessel the expenses incident to his sickness, occurring after his rightful discharge in a foreign port, although he may, under his contract, be entitled to wages until his arrival at the port of his employment.—Lombard S. S. Co. v. Anderson, 134 Fed. 568, 67 C. C. A. 432.

[b] (U. S. 1907) The obligation of a vessel to furnish medical attendance, etc., to a seaman injured in her service does not end with the termination of the voyage, where there was not sufficient time or facilities for the vessel to have then performed its duty. Decrees (D. C. 1905) 138 Fed. 941, and (D. C. 1906) 145 Fed. 446, affirmed.—The Mars, 149 Fed. 729, 79 C. C. A. 435.

[c] (U. S. 1880) A seaman injured in the service of a vessel, without his fault, is entitled to be taken care of at the expense of the vessel until the end of the voyage, and longer, if necessary to effect a cure, so far as the same can be done by the use of the ordinary medical means; and the fault which will exempt a vessel from such liability is not mere ordinary negligence consistent with good faith, but some positively vicious conduct, such as gross

Digitized by Google

negligence, or willful disobedience of orders.—Peterson v. The Chandos (D. C.) 4 Fed. 645, 6 Sawy. 544.

[d] (U. S. 1887) Although a seaman who is injured in the service of the ship, without the fault either of himself or the ship, can recover no compensation by way of damages from the ship, he is entitled to be healed at the expense of the ship, even after the voyage has terminated, and the seaman is discharged.—The Lizzie Frank (D. C.) 31 Fed. 477.

[e] (U. S. 1889) A seaman, injured in the service of a vessel through the concurrent fault of the vessel and his own, is entitled, where his own negligence has not been gross, to be cared for, at least to the end of the voyage.—The City of Carlisle (D. C.) 39 Fed. 807, 5 L. R. A. 52.

[f,g] (U. S. 1890) The obligation of a vessel navigating the lakes to support and cure seamen taken sick or receiving injuries in the service of the ship does not extend beyond the termination of the seaman's contract, and his return to his home or to a marine hospital.—The J. F. Card (D. C.) 43 Fed. 92.

[h] (U. S. 1891) A seaman, who was injured by his own negligence, having been well cared for and treated during the voyage, could not recover medical expenses incurred in consequence of such injuries after its termination and his return to the port of discharge.—Lambos v. The Tammerlane (D. C.) 47 Fed. 822.

[i] (U. S. 1905) The liability of a ship for the maintenance and cure of a seaman injured in its service does not terminate with the voyage, but continues until the cure is completed, so far as expenses necessarily incurred for the cure are concerned.—McCarron v. Dominion Atlantic Ry. Co. (D. C.) 134 Fed. 762.

[j] (U. S. 1905) A seaman was injured without his fault while in the service of a vessel, and was taken to a hospital after the completion of the voyage, at the charge of the vessel, from which he was subsequently discharged as cured. It appeared, however, that he had received other injuries than those treated, which prevented him from working, and made it necessary for him to obtain board, medical attendance, and nursing for a considerable time after his discharge. *Held*, that he was entitled to recover from the vessel the expense so incurred.—The Henry B. Fiske (D. C.) 141 Fed. 188.

[k] (U. S. 1846) The privilege of seamen to be maintained by the ship, and cured at her expense of a disease or disability incurred in the service of the ship, continues no longer than their right to wages under their contract in the particular case.—Nevitt v. Clarke, Fed. Cas. No. 10,138 [Olcott, 316].

[l] (U. S. 1849) As a general rule, where a seaman's sickness or disability continues after the voyage is fully completed, he has no claim upon the ship or owner for the cure of his sickness or disabilities after his contract has terminated, and he is returned to his port of shipment or discharge, or has been furnished with means to return.—The Atlantic, Fed. Cas. No. 620 [Abb. Adm. 451].

[m] (U. S. 1867) In the absence of misconduct or neglect on the part of some officer, the obligation of the vessel to provide for a disabled or sick seaman is only coextensive with the obligation of the seaman to the vessel. It terminates, in ordinary cases, when the shipping contract is dissolved.—The Ben Flint, Fed. Cas. No. 1,299 [1 Abb. (U. S.) 126, 1 Biss. 562].

VI. On Shore.

[a] (U. S. 1800) By act of Congress, the ship is bound to furnish medicines or pay the physician's bill; but the sailor, when the ship is properly furnished, must pay for surgical or medical advice and assistance. If left or put on shore, his reasonable board wages must be paid by the ship.—Walton v. The Neptune, Fed. Cas. No. 17,135 [1 Pet. Adm. 142].

[b] (U. S. 1823) The expenses of curing a sick seaman in the course of the voyage is a charge on the ship by the maritime law; and in this charge are included not only medicines and medical advice, but nursing, diet, and lodging, if the seaman be carried ashore.—Harden v. Gordon, Fed. Cas. No. 6,047 [2 Mason, 541].

[c] (U. S. 1823) Act Cong. July 20, 1790, c. 29, § 8, and Act Cong. March 2, 1805, c. 88, requiring a medicine chest and medicines to be carried by all

Digitized by Google

vessels, do not affect the vessel's liability for charges of nursing and lodging a seaman, if he has to be taken ashore.—Harden v. Gordon, Fed. Cas. No. 6,047 [2 Mason, 541].

[d] (U. S. 1832) A mate succeeding to the command of a vessel on the death of the master is entitled to be cured at the expense of the ship, in the same manner as a seaman; and if he is put on shore on account of sickness, for the convenience of the ship, his expenses for medicines, etc., are to be borne by the shipowner.—The George, Fed. Cas. No. 5,329 [1 Sumn. 151], affirming (1834) Fed. Cas. No. 8,035 [1 Sumn. 591].

[e] (U. S. 1833) Where a seaman is taken on shore, in a foreign port, at his own solicitation, from a vessel properly provided with a chest of medicines, and there receives medical attendance and advice, the expenses thereof are to be deducted from his wages.—Pierce v. Patton, Fed. Cas. No. 11,145 [Gilp. 435].

[f] (U. S. 1834) Expenses incurred for board, physician's attendance, and medicine for a sick seaman, who voluntarily goes ashore to be treated for yellow fever, cannot be deducted from that seaman's wages. The maritime law makes these chargeable to the ship, and this is not changed by statute.—Lamson v. Westcott, Fed. Cas. No. 8,035 [1 Sumn. 591], affirmed The George (1832) Fed. Cas. No. 5,329 [1 Sumn. 151].

[g] (U. S. 1837) Where the seaman is removed ashore, or where there is no person on board the vessel who can safely administer medicine, the vessel is liable for medical advice and attendance, though she carries a medicine chest, as provided by Act July 20, 1790, c. 56, § 8 (1 Stat. 134).—The Forest, Fed. Cas. No. 4,936 [1 Ware, 429].

[h] (U. S. 1840) A seaman cannot recover against a vessel for gratuitous hospital treatment for an injury received on board. The right to recover is limited to actual charges and disbursements.—Davis v. The Erie, Fed. Cas. No. 3,632a.

[i] (U. S. 1857) A seaman injured during a voyage, and left sick in a foreign port, is entitled to wages during such sickness, and up to his arrival home, together with medical expenses, deducting wages actually earned on the return voyage.—Harris v. Capen, Fed. Cas. No. 6,118.

[j] (U. S. 1866) When the ship has not the means to cure a seaman who is taken ill on a whaling voyage, and he is cared for on shore, the reasonable expenses of his care and cure are chargeable to the ship.—Babcock v. Terry, Fed. Cas. No. 702 [1 Low. 66].

[k] (U. S. 1872) Under the British law, where an injured seaman is left behind in a foreign port, his wages stop, but the ship is liable for his cure and care.—The Magna Charta, Fed. Cas. No. 8,953 [2 Low. 136].

[l] (U. S. 1872) A sick seaman is entitled to be cared for and cured at the expense of the ship, and the fact that his disease is malignant and infectious will afford no justification or excuse to the master for setting him ashore, without any provision for his care, his subsistence, or his proper medication.—Tomlinson v. Hewett, Fed. Cas. No. 14,087 [2 Sawy. 278].

[m] (U. S. 1887) A seaman, having been admitted to a United States marine hospital, and obtained a discharge therefrom at his own request, the vessel is not liable for expenses thereafter incurred by him at a private hospital.—Raymond v. The Ella S. Thayer (D. C.) 40 Fed. 902, 12 Sawy. 409.

[n] (U. S. 1890) A seaman, ill with fever, was sent to a hospital, and remained there 134 days. It appeared that, so far as the fever was concerned, he might have left the hospital at the end of two months, but that, owing to having had some of his toes amputated, he was unable at that time to stand on his feet or take care of himself. *Held*, that the ship was liable to the New York quarantine commissioners for the seaman's expenses during the entire period of his stay at the hospital.—The Wensleydale (D. C.) 41 Fed. 829.

[o] (Me. 1842) Where, by the laws of a port, the physician's bills for attendance on seamen must be paid by the vessel before she can leave, payment in such case by the vessel is to be considered as payment pro tanto of the seamen's wages.—Pray v. Stinson, 21 Me. (8 Shep.) 402.

[p] (Pa. 1831) A seaman shipped on board a vessel, on a voyage from Philadelphia to Port au Prince, and, while at the latter place, he fell sick of yellow fever, and was asked by the captain if he would rather remain on board,

Digitized by Google

or go ashore to the "Maison de Santé." He chose the latter, and was removed to the hospital. *Held*, that the hospital bill was properly chargeable to the vessel and owner, and that the seaman was entitled to receive his whole wages without deduction.—Johnson v. Doubty, 1 Ashm. 165.

[q] (Pa. 1883) Where the engineer of a tug boat was injured by an explosion on the boat, while in the home port, and the officer in charge of the vessel summoned a physician, who treated the engineer first on board the tug and afterwards at his home, whither he was removed at his request, the vessel owner is liable to the physician for such services and for medicines supplied. —Holt v. Cummings, 102 Pa. 212, 48 Am. Rep. 199.

[r] (S. C. 1819) The defendant, by his clerk, requested the admission of a foreign seaman into the Charleston Marine Hospital (for which a charge of 75 cents a day is authorized by congress), and, in default of the foreign captain, he was *held* liable for the amount due.—City Council of Charleston v. Boyd, 1 Mill, Const. 353.

VII. Deviation from Course.

[a] (U. S. 1904) The master of a sailing vessel bound for San Francisco is not chargeable with fault in failing to put back 480 miles from the place of accident to Port Stanley, in the East Falkland Islands, to secure surgical attendance for a seaman who was disabled by the accident while the vessel was rounding Cape Horn, although, with the winds then prevailing, it would have been possible to reach that port in three or four days, where the return from the port to the place of the accident, in view of the head winds, might have taken as many weeks. Decree (1902) 118 Fed. 1003, 55 C. C. A. 497, affirmed.—The Iroquois, 194 U. S. 240, 24 Sup. Ct. 640, 48 L. Ed. 955.

[b] (U. S. 1904) The failure of the master of a sailing vessel bound for San Francisco to put into San Carlos or Ancud to secure surgical attendance for a seaman who was disabled in an accident while the vessel was rounding Cape Horn is not negligence, since these are not harbors at which vessels from the Atlantic and Pacific ports are in the habit of stopping, and while the master was apprised by his charts of their existence, it might well be that he was ignorant of their population and surgical facilities. Decree (1902) 118 Fed. 1003, 55 C. C. A. 497, affirmed.—The Iroquois, 194 U. S. 240, 24 Sup. Ct. 640, 48 L. Ed. 955.

[c] (U. S. 1901) Libelant was mate on a schooner which left San Francisco on a cod-fishing cruise in Alaskan waters, all the crew being on a lay. When 500 miles from Port Townsend libelant was struck by the main boom, without fault on the part of any one, and his leg was broken in two places. There was no surgeon on board, nor any one competent to treat the injury. Libelant asked to be taken back to shore, and the wind was favorable, but the master proceeded to Unalaska, 1,750 miles from the place of injury, which he reached in 16 days, and from that port libelant was sent back to San Francisco. By reason of the delay and the motion of the ship, libelant suffered much additional pain, and his injury was rendered permanent. *Held*, that it was the duty of the master, under the facts shown, to at once proceed to Port Townsend, which was the nearest available port where libelant could have received proper care and treatment, and that his failure to do so rendered the owners liable in damages.—Whitney v. Olsen, 108 Fed. 292, 47 C. C. A. 331.

[d] (U. S. 1904) The master of a sailing ship on a voyage to Honolulu was not chargeable with a neglect of duty which renders the ship liable in damages because he did not return from the vicinity of Cape Horn to Port Stanley, Falkland Islands, which was the nearest port, and 540 miles distant, with a seaman who received an injury in which both bones of his leg below the knee were broken, where the mate, who had some surgical skill and experience, took charge of the injured man, and set the bones, which united firmly, but, by reason of the fracture being oblique, overlapped, producing a shortening of the leg, and where, while the ship could probably have made the islands in two or three days, the season was midwinter, when the days were short and cold and storms prevailed, and it was further shown without contradiction that the entrance of the harbor at Port Stanley by a ship of her size was very dangerous, and likely to take several days at that season, and that

Digitized by Google

vessels went there only as a last resort, and in cases of dire necessity.—The Erskine M. Phelps, 131 Fed. 1, 65 C. C. A. 239.

[e] (U. S. 1905) Libelant, a seaman on a barkentine bound, with cargo, from a Chilian port to Savannah, Ga., when off the west coast of South America near Cape Horn, fell into the sea and his leg was bitten off by a shark. He was rescued and given such treatment and care on board as was possible, and the vessel proceeded on her voyage, reaching Savannah in a little less than three months, where libelant was sent to a hospital. It was found that the leg had healed; but an amputation was necessary on account of the condition of the bones, and it was successfully performed. The nearest known port to the place of the accident at which surgical treatment could have been obtained was Port Stanley, Falkland Islands, to reach which would have required at least 23 days, because of the distance, the season, which was winter, and the prevailing winds. Libelant's wound was kept dressed; the vessel having a medicine chest. Hemorrhage and fever subsided in about four days, and he continued thereafter to improve. *Held*, that under the circumstances the master was not chargeable with negligence which would render the vessel liable in not sailing for Port Stanley or putting into an intermediate port.—The Margharita, 140 Fed. 820, 72 C. C. A. 232; Boero v. Martinez, Id.

[f] (U. S. 1880) A departure from the due course of a voyage to save property merely is a deviation, and will forfeit the insurance; but a departure to save life is not. But although the law will, as between the insurer and insured, excuse a departure from motives of humanity, a master is not correspondingly bound to make such departure even to save the life of one of the crew; but the time and risk likely to be consumed and incurred in such departure, as compared with that incident to the direct voyage, are to be considered, and have a controlling influence in the matter.—Peterson v. The Chandos (D. C.) 4 Fed. 645, 6 Sawy. 544.

[g,h] (U. S. 1887) The libelant's leg having been broken 12 days before arrival at St. Helena, the master did not call in medical aid, because he did not believe the seaman's leg was broken, and thought him shamming, notwithstanding the seaman's persistence that his leg was broken, and various circumstances indicating serious difficulty. The leg might there have been properly set. Upon arrival at New York, it was found grown together in so bad a position as permanently to disable his limb for seaman's duties. *Held*, that libelant could recover damages.—The Vigilant (D. C.) 30 Fed. 288.

[i] (U. S. 1902) Libelant, who was a seaman 20 years old, fell to the deck during a gale without negligence on his part, and sustained a simple fracture of the bones of one leg below the knee. There was no surgeon on board, but the master, with the assistance of others, undertook to set the bones, bound the leg in splints, and proceeded on his voyage to San Francisco, where the ship arrived in about 10 weeks, and where libelant was paid off, and went to a hospital. The bones had failed to unite, owing to improper and unskillful treatment, and, because of the lapse of so long a time, could not be made to do so, and it became necessary to amputate the leg. At the time of the injury the ship was southwest of Cape Horn, and 450 miles from a port in the Falkland Islands, where surgical aid could have been obtained, and which the ship could have reached in two or three days, although it would have required four or five weeks, owing to head winds, to put back to such port, and again recover the distance lost. *Held*, that the injury was such that the master must be presumed to have known that the services of a competent surgeon were required to make a recovery reasonably certain, and his duty required him to make an attempt to procure them by putting into port, regardless of the loss of time and expense incident to such deviation.—The Iroquois (D. C.) 113 Fed. 964.

[j] (U. S. 1902) Loss of time and risk to cargo are matters which cannot properly be permitted to outweigh the duty of a vessel to procure surgical aid for a seaman injured in the service of the vessel without his fault or negligence, when such assistance is reasonably necessary, and cannot be otherwise obtained than by putting into port. The obligation of the ship is discharged only when the master has used reasonable care to provide for the comfort and care of the seaman. Whether he is required to deviate from his course to touch at some port will depend upon the circumstances of the particular

Digitized by Google

case, such as the nature of the injury, the means for treating it on board, and the probability of being able to reach a port in time for his relief. If a person of ordinary judgment would know that the injury was such as to seriously endanger the seaman's life or limb, and that he should have medical or surgical aid at the earliest possible moment, it is the imperative duty of the master to take the necessary steps to procure such aid, if within his power.—The Iroquois (D. C.) 113 Fed. 964.

[k] (U. S. 1902) The fact that libelant made no objection to the action taken by the master, and did not request to be taken to the nearest port, where he was not consulted, did not prejudice his rights, nor relieve the ship from liability for the failure to perform the duty which his condition demanded.—The Iroquois (D. C.) 113 Fed. 964.

[l] (U. S. 1904) Libelant, a seaman on a steamer on a return voyage from a Mexican port to New York, fell and broke his ankle when off Cape Hatteras. The vessel proceeded to New York, which was the end of the voyage, and was reached 48 hours after the injury. A doctor was called, who considered it a sprain, and libelant was not sent to a hospital, although he requested to be, but was kept in his bunk in the forecastle, and the vessel started on another voyage. After reaching Norfolk, at his insistence other physicians were called, and 10 days after the injury he was taken to the hospital. It was then found that the bones had improperly united, and they were broken again and reset. Libelant suffered severe pain, was permanently crippled, and remained in the hospital for six months. *Held*, that the vessel was not at fault for not deviating from its course to take libelant to Norfolk after the injury, but was liable for the failure to procure prompt and efficient treatment and care at the end of the voyage, and libelant was awarded $500 damages in addition to the expense of his cure.—The Svaeland (D. C.) 132 Fed. 932.

[m] (U. S. 1859) A seaman, on a voyage from Calcutta to Boston, 25 days before passing in sight of St. Helena, fell from aloft and broke both legs. *Held*, that it was the duty of the master to have put into St. Helena for his relief.—Brown v. Overton, Fed. Cas. No. 2,024 [1 Spr. 462].

VIII. Contributory Fault of Seaman.

[a] (U. S. 1907) A seaman injured in the course of his employment by his own negligence does not thereby forfeit his right to cure and maintenance at the expense of the vessel, where the injury was not caused by his gross negligence or willful neglect of orders, etc. Decrees (D. C. 1905) 138 Fed. 941, and (D. C. 1906) 145 Fed. 446, affirmed.—The Mars, 49 Fed. 729, 79 C. C. A. 435.

[b] (U. S. 1884) Where the libelant, a seaman, was injured severely through the negligence of the ship, his own negligence contributing thereto, so much so that without his contributory negligence he would not have been injured at all, *held* that, while equity will not justify his being rewarded for his negligence at the expense of the ship, equity and good conscience will permit that the ship shall be held responsible for its negligence resulting in injury, to the extent of paying for the direct care, attention, medical services, and expenses required for the injured party, not as compensation for the injury, but as required by decency and humanity from a party without whose fault there would have been no injury.—The Wanderer (C. C.) 20 Fed. 140.

[c] (U. S. 1880) A seaman injured in the service of a vessel, without his fault, is entitled to be taken care of at the expense of the vessel until the end of the voyage, and longer, if necessary to effect a cure, so far as the same can be done by the use of the ordinary medical means; and the fault which will exempt a vessel from such liability is not mere ordinary negligence, consistent with good faith, but some positively vicious conduct, such as gross negligence or willful disobedience of orders.—Peterson v. The Chandos (D. C.) 4 Fed. 645, 6 Sawy. 544.

[d] (U. S.) Where a seaman is permanently disabled through the negligence of the ship's officers, he is entitled, irrespective of any negligence on his own part or on the part of fellow seamen, to be cured at the ship's expense, so far as cure is possible.—(1883) The City of Alexandria (D. C.) 17 Fed. 390; (1891) Paulson v. The Governor Ames (D. C.) 55 Fed. 327.

[e] (U. S. 1889) A seaman injured in the service of a vessel through the concurrent fault of the vessel and his own is entitled, where his own negli-

Digitized by Google

gence has not been gross, to be cared for, at least to the end of the voyage, and he may recover damages for the gross neglect and maltreatment of the officers of the vessel after such injury.—The City of Carlisle (D. C.) 39 Fed. 807, 5 L. R. A. 52.

[f] (U. S. 1893) A deck hand on a steamer, on the day after his employment as such began, was ordered to paint the smokestack, and, misunderstanding the directions given him, he placed a ladder weighing about 80 pounds against the smokestack. When he ascended it, the stack fell, and he received serious injuries. *Held*, that his fault was not of such a character as to debar him from recovering his expenses while he was disabled, and a sum equal to his wages for a like period will be allowed.—Davidson v. The City of St. Louis (D. C.) 56 Fed. 720.

[g] (U. S. 1899) Libelant, while cook on a schooner, during an altercation was assaulted by the captain, and, on freeing himself, seized an ax, with which he inflicted a wound on the captain's hand. He was seized and placed in irons by the captain's order, and thrown down a hatch, where he was chained and kept a prisoner for about 10 days, and then released and discharged. He was handled with unnecessary roughness, by which one of his ribs was broken, and he received other injuries, none of which were given any attention or care during his imprisonment, and from which he was disabled and suffered for some time thereafter. *Held*, in a suit in rem to recover wages and damages, that while, under admiralty rule 16, he could not recover for the assault and battery, he was entitled to his wages, and damages for the failure to give him proper care after injury, but, in view of his being also in fault, such damages would be limited to $200.—The Fred E. Sander (D. C.) 95 Fed. 829.

[h] (U. S. 1833) Where a seaman contracts disease by his own vices or faults, and in defiance of the counsel and command of his superior officers, the vessel is not chargeable for the expense of his cure.—Pierce v. Patton, Fed. Cas. No. 11,145 [Gilp. 435].

[i] (U. S. 1842) A seaman who disregards the advice of his physician, and uses a wounded foot, cannot recover of the ship for its subsequent care and cure.—Richardson v. The Juillette, Fed. Cas. No. 11,784.

[j] (U. S. 1843) A seaman during illness occasioned by his own fault is liable for the expenses of his subsistence.—Johnson v. Huckins, Fed. Cas. No. 7,390 [1 Spr. 67].

[k] (U. S. 1853) A sailor is not entitled to be treated at the expense of the ship, nor to wages, while disabled by disease brought on by his own vices, nor when, being in a diseased state, unknown to the master and owners, he ships as an able man.—Chandler v. The Annie Buckman, Fed. Cas. No. 2,591a.

[l] (U. S. 1867) The claim of a seaman to be cured at the expense of the ship is not forfeited because the hurt or sickness may have been incurred through his negligence, unless something more is shown than mere ordinary carelessness, consistent with good faith in the prompt discharge of duty in obedience to orders. To forfeit the claim, the disability or sickness of the seaman must be owing to vicious or unjustifiable conduct; such as gross negligence operating in the nature of a fraud upon the owners—willful disobedience to orders—persistent neglect of duty.—The Ben Flint, Fed. Cas. No. 1,299 [1 Abb. (U. S.) 126, 1 Biss. 562].

IX. Actions to Recover Expenses.

[a] (U. S. 1904) The concurring decisions of the two lower courts, that the master of a sailing vessel bound for San Francisco was bound to put into an intermediate port for surgical attendance for a seaman who, while in the discharge of his duties, had fractured two ribs and his right leg in a fall from the main yard to the deck while the vessel was rounding Cape Horn, will not be disturbed by the Federal Supreme Court, where the ship was about 1,500 miles from Valparaiso when the accident happened, and, with favorable winds, could have reached that port in 14 days, without causing a delay to the voyage of more than 5 or 6 days. Judgment (1902) 118 Fed. 1003, 55 C. C. A. 497, affirmed.—The Iroquois, 194 U. S. 240, 24 Sup. Ct. 640, 48 L. Ed. 955.

[b] (U. S. 1904) A decree affirmed which awarded a seaman $4,000 damages

Digitized by Google

against a ship on the ground of the gross negligence of the master in failing to furnish libelant proper care and medical attendance after his accidental injury in the service of the ship, by reason of which he suffered greatly and was permanently crippled. Decree (D. C. 1902) 118 Fed. 769, affirmed.—The Troop, 128 Fed. 856, 63 C. C. A. 584; Kenney v. Louie, Id.

[c] (U. S. 1887) Where a libel is filed by a seaman for damages for personal injuries, and also praying other relief, the admiralty is competent to administer a suitable remedy; and, although the court finds no damages due, it may make a decree for such expenses in healing the libelant as have been already incurred. But it cannot decree for prospective expenses.—The Lizzie Frank (D. C.) 31 Fed. 477.

[d] (U. S. 1902) A seaman who is injured while in the service of the ship without fault on his part is entitled to be cured, so far as that is possible, at the expense of the ship; and in a suit by him in a court of admiralty to recover damages for the injury, in which it is determined that the ship is not liable, it is competent for the court, under a prayer for general relief, to award him compensation for the failure of the ship to furnish him proper support, medical attendance, nursing, and care while his wounds were healing, and for the additional suffering he endured for lack of such attendance and care. —The Troy (D. C.) 121 Fed. 901.

[e] (U. S. 1823) In a suit by a seaman to recover for expenses occasioned by sickness in a foreign port, the onus probandi in respect to the sufficiency of the medicine chest lies on the owner.—Harden v. Gordon, Fed. Cas. No. 6,047 [2 Mason, 541].

[f] (U. S. 1823) Admiralty has jurisdiction to enforce the payment of expenses for curing a sick seaman in the course of a voyage.—Harden v. Gordon, Fed. Cas. No. 6,047 [2 Mason, 541].

(154 Fed. 1003.)

FAWCETT v. UNITED STATES.

(Circuit Court of Appeals, Second Circuit. February 25, 1907.)

No. 142 (3,979).

1. CUSTOMS DUTIES—CLASSIFICATION—COMBED SILK.

Combed silk that has fallen from or been caught in the machines in which it was undergoing further operations is dutiable under the provision in paragraph 384, Tariff Act July 24, 1897, c. 11, § 1, Schedule L, 30 Stat. 185 [U. S. Comp. St. 1901, p. 1668], for silk not further manufactured than combed, and is not subject to the provision for silk waste in paragraph 661, § 2, Free List, 30 Stat. 201 [U. S. Comp. St. 1901, p. 1688].

2. SAME—SILK WASTE—SILK COCOONS.

Paragraph 661, Tariff Act July 24, 1897, c. 11, § 2, Free List, 30 Stat. 201 [U. S. Comp. St. 1901, p. 1688], enumerating "silk cocoons and silk waste," includes those articles only when not manufactured at all.

Appeal from the Circuit Court of the United States for the Southern District of New York.

The Circuit Court affirmed the decision of the Board of United States General Appraisers which affirmed the assessment of duty by the collector of customs at the port of New York on merchandise imported by Hughes Fawcett. From the decision of the Circuit Court the present appeal is taken.

The opinion filed below, and here reprinted from 146 Fed. 83, was in full as follows:

Digitized by Google

WHEELER, District Judge. This merchandise is combed silk that had fallen from, or been caught in, the machines, through which it was undergoing further operations with other silk of the same quality, which kept on toward further completion. The silk schedule of the act of 1897 lays on "384. Silk partially manufactured from cocoons or from waste silk and not further advanced, or manufactured than carded or combed silk, forty cents per pound." Act July 24, 1897, c. 11, § 1, Schedule L, 30 Stat. 185 [U. S. Comp. St. 1901, p. 1668]. This material was none the less combed silk because it got out of place or dirty in the further process, so as not to be further advanced than combed silk. It was situated in the process like the steel-rail crop ends in Robertson v. Perkins, 129 U. S. 233, 9 Sup. Ct. 279, 32 L. Ed. 686, which were held to be none the less steel because they were an overplus in the manufacture of steel rails. "Silk cocoons and silk waste" are free by paragraph 661, § 2, Free List, 30 Stat. 201 [U. S. Comp. St. 1901, p. 1688], but that is when they are not manufactured at all; when they are, they come under paragraph 384.

Decision affirmed.

Curie, Smith & Maxwell (W. Wickham Smith, of counsel), for importer.

D. Frank Lloyd, Asst. U. S. Atty.

Before WALLACE, LACOMBE, and TOWNSEND, Circuit Judges.

PER CURIAM. Decision of Circuit Court affirmed on decision of Judge Wheeler.

(154 Fed. 326.)

HAMMERSCHLAG MFG. CO. v. STRUTHERS-WELLS CO.

(Circuit Court of Appeals, Third Circuit. April 26, 1907.)

No. 7.

1. SALES—BREACH OF WARRANTY—INSTRUCTIONS—STATEMENT OF ISSUES.

The charge of a trial court in an action to recover the purchase price of an engine considered, and *held* to have fully and fairly submitted to the jury the issues raised with respect to the compliance of the engine with the warranty made in the contract of sale.

2. EVIDENCE—RELEVANCY TO ISSUES—COLLATERAL FACTS.

In an action to recover the purchase price of an engine built and installed by plaintiff in defendant's factory, in which the defense was the failure of the engine to comply with the warranty, evidence of the alleged unsatisfactory work of other engines built by plaintiff for other parties was properly excluded, where it was not shown that they were the same as the engine in suit, or that they were intended for like use or sold under a like warranty.

In Error to the Circuit Court of the United States for the District of New Jersey.

John Griffin and S. F. Kneeland, for plaintiff in error.

Herbert A. Heyn and Geo. B. Covington, for defendant in error.

Digitized by Google

Before GRAY and BUFFINGTON, Circuit Judges, and HOLLAND, District Judge.

BUFFINGTON, Circuit Judge. In the court below the Struthers-Wells Company, here called the plaintiff, brought suit against the Hammerschlag Manufacturing Company, the defendant, to recover $30,000, the purchase price for a gas engine furnished upon a written contract. The engine was built by plaintiff and erected in defendant's factory. The latter refused to accept or pay for the same, alleging it did not comply with the contract. After a trial lasting some three weeks, there was a verdict for plaintiff for the full amount claimed.

The record brought to this court is a voluminous one, and there are 131 assignments of error. On critical examination, the controversy properly narrowed itself, and at the argument 78 of the assignments were abandoned. The remaining 53 resolve themselves into three contentions: First, the sufficiency of the court's charge as to the guarantied fuel economies of the engine; secondly, its rejection of testimony as to the Easton engines; thirdly, plaintiff's failure to furnish the regulator specified in the contract. We deem it proper to say in regard to this wholesale assignment of errors and the abandonment of the bulk of them at argument that the wiser course is to confine the assignments to such matters as on argument counsel will be justified in pressing.

Without referring to other guaranties, the one material to the first question is given below in an extract from the charge. This guaranty, it will be observed, called for the development of the horse power under certain fuel economies. The complaint of defendant is that by the charge of the court and its omission to answer certain of its points the jury were allowed to determine the case on the capacity of the engine to develop the guarantied horse power, without reference to the requirement that it should be under certain fuel economies. If this was the case, error was committed. We have carefully and in detail examined every assignment of error and the testimony bearing thereon, and are satisfied no error was committed by the court during this protracted trial. In the character of the proofs given and in the rulings of the court, all the provisions of this guaranty were constantly before the court and jury, as essential requirements on the part of the plaintiff. As the defendant prevented making subsequent tests, the testimony as to the fulfillment of the guaranty was confined to the test of May 12, 1903. In his testimony Prof. Lucke, who conducted this test for plaintiff, admitted plaintiff was bound to comply with the fuel economies of the guaranty. His evidence was that at the test he stated to Mr. Richmond, who was overseeing it for defendant (the fuel economy requirement):

"I outlined the test as I understood the requirements the contract called for. Question. What did you say about it? Answer. I said: 'As I interpret this contract guaranty, this engine is to be operated for a period of three hours, during which time we are to determine how much coal is used to produce 800 indicated horse power. This involves the measurement of the speed, the taking of indicator cards, of the mean effective pressure. It involves also the measurement of the coal and gas producers.'"

Digitized by Google

On the trial proof was made of the amount of fuel used at the test. Indeed, it is apparent from an examination of all the testimony that the various elements of this guaranty, including that of fuel economies, were constantly called to the jury's attention. Now the judge at the outset of the charge called attention to this guaranty in ipsissimis verbis. He said:

"We find, then, that on May 5, 1903, a contract in writing was made between the plaintiff and the defendant. What are the provisions of that contract that you ought to keep in mind as you take up the facts to consider them? It will not be necessary to read the whole contract to you, but, in order that your memories may be refreshed as to the material contents of this contract, I will read to you the portions that I think you ought to give special attention to, though I by no means mean that you should not consider the whole contract, examining it for yourselves, and giving attention to the whole of it. What I will call your attention to are these provisions."

He then read pertinent parts and said:

"Then, still further along in the contract, follows what is denominated the 'guaranty.' It is not necessary to read the whole of it, but I will read this part: 'We guaranty this engine to be capable of developing 800 indicated horse power for a period of three consecutive hours, at a specified rate of speed' (which you will remember is one hundred and eighty revolutions per minute), 'operating on producer gas of good quality, manufactured by the Taylor Gas Producer, and containing not less than 125 B. T. U. per cubic feet. The quantity of such gas consumed not to exceed eighty cubic feet per indicated horse power developed per hour, or not to exceed the amount produced by the Taylor Gas Producer from one pound of best quality No. 1 buckwheat anthracite coal; the engine in each case operating under full load.'"

It will thus be seen the attention of the jury was thus pointedly directed to this guaranty. The court then called special attention, under the inquiry, "What has the defendant set up that you must consider?" to the questions which, under the statutory defenses of New Jersey, the jury was to consider, and sent out the pleas with them, which, inter alia, averred that:

"The engine was incapable of developing 800 indicated horse power for a period of three consecutive hours, at the specified rate of speed, operating on producer gas of good quality, manufactured by the Taylor Gas Producer, and containing not less than 125 B. T. U. (British Thermal Units) per cubic foot, and the quantity of such gas consumed exceeded 80 cu. ft. per indicated horse-power developed per hour, and exceeded the amount produced by the Taylor Gas Producer from one pound of best quality No. 1 buckwheat anthracite coal; the engine in each case operating under full load."

The jury's special attention was called to these pleaded defenses, and the court said:

"By the removal of the engine from the cars, and the erection of the same on defendant's foundation, the defendant did not waive the right to reject the engine, if it should appear at any time thereafter that the engine was incapable of fulfilling the terms of the guaranty concerning which a defense has been raised in the pleadings."

It further said:

"The next point is as to the question whether or not the engine was capable of developing an indicated horse power of 800. In a general way it is true that the plaintiff must prove his case, and that is true here. The defense has by its pleas raised the questions as to which a contest is made. As to these points the burden of proof is first on the plaintiff. The plaintiff must satisfy

Digitized by Google

you by a preponderance of evidence that it has complied with its contract in respect to the points raised by the defense. That is the rule of law."

Further on, referring to the test, the court, in calling attention to different features, said: "What about the gas producers?" And "in the making of any test the plaintiff was entitled to a fair opportunity to demonstrate the capability and economy of the engine," and the jury were expressly told that:

"If this engine was not capable of developing eight hundred indicated horse power, and did not comply with the other provisions of the contract concerning which a contest is made here, then, of course, you must find against the plaintiff."

And in answer to a request by a juror for the contract, the court instructed them they should take it and the pleadings also. In view of the proof being addressed, inter alia, to the item of fuel economies, the stress that was laid on every provision of this guaranty, the reading of it to the jury, and calling attention to the pleas as specifying the questions they were to determine, there is no doubt the jury understood the guaranty meant what it said, and that the plaintiff was bound to comply with the guarantied fuel economies. Indeed, it is quite clear that, from the course this very protracted case took, the words of this guaranty, including horse power and economy tests, were by constant repetition from day to day so impressed on the minds of counsel and the jury when the trial judge charged that it had merely to allude to the 800 horse-power test to bring before the minds of both jury and counsel each and every term of the guaranty, which by that time all of them would almost know by heart. In a long trial, such as this, a judge may in charging overlook some details, but the omission of counsel to call attention to it is suggestive that he did not regard such omission as material, or as tending to withdraw any issue from the jury. It is, however, insisted that in the defendant's first three points the court's attention was called to the fuel requirements, and its omission to answer them was error. We cannot so regard the court's action. In the first place, the points were not specifically addressed to the fuel economies, but to the guaranty as a whole. They wholly ignored the important feature whether the defendant had prevented a fair test on May 12th, and whether the plaintiff was not entitled to another trial. A categorical answer to them as stated would have misled the jury, because it would have ignored defendant's conduct with reference to the test. There would, therefore, have been no error had the court refused them. But the exact language of them all had already been used by the court in its general charge, as we have quoted above, and the jury instructed that the burden of proof to show compliance was on the plaintiff. But the jury's attention was also called, as was proper, to the modifying fact of the defendant preventing a fair test, if it did so. That the defendant regarded the court as having treated the subject-matter of the points in the general charge is shown by the exception taken at the time, not to a refusal or even an omission to answer, but "to the charge of the court modifying the defendant's request to charge found in the first, second, and third requests to charge."

Digitized by Google

After careful consideration, we are of opinion there was no act of omission or commission by the court in reference to the guarantied fuel economies which warrants reversal of the judgment.

As to the second contention, we think the court rightly rejected the testimony of the alleged unsatisfactory work, after the contract in suit was made, of two engines at Easton. These engines were built by plaintiff for a street car system. There was no proof that they were the same as the one in suit, that they were intended for like use, or that they were operated under the conditions of this guaranty. To admit such testimony would be to try issues not involved in this case, and would have tended to mislead the jury from those issues.

It is contended, as to the third point, the plaintiff did not furnish the regulator specified in the contract, but there was evidence to show that another, and alleged better, make was furnished after consultation with defendant. There was proof to show the substitution was made with its consent.

Without entering into a discussion in detail of the very numerous assignments, we may here say they have each received careful individual examination, and we find nothing to warrant our disturbing this verdict.

The judgment is therefore affirmed.

(154 Fed. 330.)

PECK v. TRIBUNE CO.

(Circuit Court of Appeals, Seventh Circuit. April 16, 1907.)

No. 1,331.

1. LIBEL—ACTIONABLE PUBLICATION—ADVERTISEMENT CONTAINING PORTRAIT.
   The publication by a newspaper of an advertisement containing a portrait of a woman, together with a statement calculated to convey the impression that she is a nurse, and had personally used, and as a nurse had recommended the use of, a certain brand of whisky as a tonic, does not constitute a libel per se, and, in the absence of allegation of special damages, will not support an action.
   [Ed. Note.—For cases in point, see Cent. Dig. vol. 32, Libel and Slander, § 213.]

2. APPEAL AND ERROR—GROUNDS FOR REVERSAL—FAILURE TO AWARD NOMINAL DAMAGES.
   Where there was no request in the trial court for the allowance of nominal damages by a plaintiff and no assignment of error because of the failure to do so, the judgment will not be reversed because of such failure.
   [Ed. Note.—For cases in point, see Cent. Dig. vol. 3, Appeal and Error, § 2468.]

In Error to the Circuit Court of the United States for the Eastern Division of the Northern District of Illinois.

The case in the court below was an action at law by plaintiff in error, a citizen of Iowa, against defendant in error, a corporation organized under the laws of Illinois, to recover damages for the printing in its newspaper by defendant in error of the following advertisement:

Digitized by Google

Nurse and Patients Praise Duffy's

Mrs. A. Schuman, One of Chicago's Most Capable and Experienced Nurses, Pays an Eloquent Tribute to the Great Invigorating, Life-Giving and Curative Properties of DUFFY'S PURE MALT WHISKEY.

"For that weak, run-down and gone feeling, it is the best tonic and stimulant in the world."

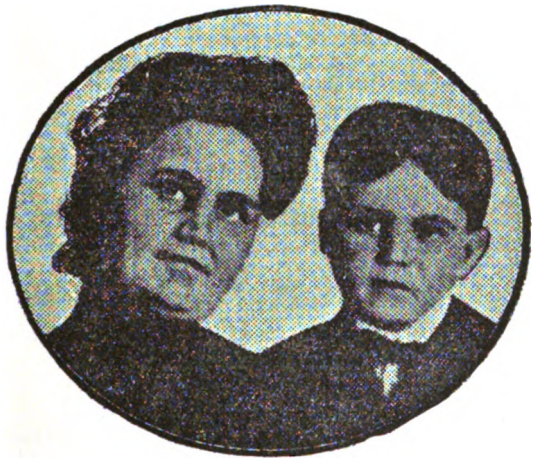

MRS. A. SCHUMAN.

"After years of constant use of your Pure Malt Whiskey both by myself and as given to patients in my capacity as nurse, I have no hesitation in recommending it as the very best tonic and stimulant for all weak and run down conditions. At least twenty-five families use it in my own neighborhood, and when I go out nursing patients ask me what to take for that 'gone feeling,' and once that Duffy's is within their reach it is used always."—Mrs. A. Schuman, 1576 Mozart St., Chicago, Ill.

Duffy's Pure Malt Whiskey

For more than fifty years Duffy's Pure Malt Whiskey has been prescribed by doctors and used in over two thousand leading hospitals as the purest and most powerful tonic-stimulant, invigorator and health-builder known to the medical science. It is endorsed by the clergy and professional nurses and recommended by all schools of medicine as a positive cure for pneumonia, consumption, grip, dyspepsia, indigestion, nervous prostration, all diseases of the throat and lungs, and every form of stomach trouble; malaria, chills, fever, and all run-down, weakened, diseased conditions of the body, brain, mind and muscle. It is a heart tonic, blood purifier and promoter of health and long life; makes the old hearty and young, and keeps the young vigorous and strong. Duffy's Pure Malt Whiskey contains no fusel oil, and is the only whiskey recognized by the government as medicine.

There is but one Duffy's Pure Malt Whiskey. Insist on having the genuine and refuse cheap substitutes and imitations offered by unscrupulous dealers, which are placed on the market for profit only and which are positively harmful to both body and brain. Look for the trade-mark, the "Old Chemist," on the label, and be sure the seal on the bottle is unbroken. Sold in sealed bottles only; never in bulk.

All reliable druggists and grocers, or direct, $1.00 a bottle. Advice and medical booklet free. Duffy's Malt Whiskey Co., Rochester, N. Y.

Digitized by Google

The averment of the declaration is, that the picture on the face of such advertisement, instead of being that of Mrs. A. Schuman, as stated, was and is, the picture of plaintiff in error, published without her knowledge or consent.

The first two counts of the declaration proceed as for libel, the plaintiff in error denying as stated in the publication respecting Mrs. Schuman, that she was a nurse, and denying as stated in the publication respecting Mrs. Schuman that she had ever used or recommended Duffy's Pure Malt Whiskey. And in these counts the further averment appears:

Plaintiff further states that the allegation in said publication that she does use and has used and does recommend and has recommended the use of said whiskey is false, malicious, scandalous and defamatory: That she is and always has been a non-user and abstainer from whiskey and all spirituous liquors: That the allegation in said publication so charging the plaintiff with the use of whiskey and recommending its use to the public has been and is greatly humiliating to the plaintiff; and that said publication has brought the plaintiff and her family into contempt and ridicule before the world.

Also this averment, that the "effect and meaning of said publication are to charge the plaintiff with the use of whiskey and to publish the same to the world, and to allege and publish of and concerning the plaintiff that she has used Duffy's Malt Whiskey constantly for years and to proclaim to the world that she has been and is a nurse and has and does recommend the use of whiskey to the public."

The last count of the declaration proceeds as for invasion of plaintiff in error's right of privacy, averring that in the printing of this advertisement, the plaintiff in error has been greatly distressed and humiliated.

The general issue having been pleaded, trial was had, resulting in an instruction to the jury by the court, to find a verdict for the defendant—the evidence tending to show that the averments of the declaration, as already stated, were true, but that the defendant in error had no knowledge, at the time of its publication, that the portrait printed was the portrait of plaintiff in error, or was other than the portrait of Mrs. Schuman.

S. C. Irving, for plaintiff in error.

John Barton Payne, for defendant in error.

Before GROSSCUP, BAKER, and SEAMAN, Circuit Judges.

GROSSCUP, Circuit Judge, after stating the facts, delivered the opinion.

The plaintiff in error indisputably has suffered a wrong, the gist of which is that by the publication of her picture in connection with a patent medicine advertisement, people who recognize the portrait will be led to think that she has loaned her face, and perhaps her name, in a way that a self respecting person would not have consented to. Were the case under review an application for an injunction to restrain future publications, or were it an action at law against the parties consciously responsible for the make-up of the advertisement, a question wholly different from the one presented by this record would be involved.

The first question presented here is, whether the plaintiff in error made out a case of libel in her declaration and proof—the gravamen of the action, as set forth in the declaration, being, that whereas plaintiff in error was not a nurse, and did not either for herself, or as nurse, use Duffy's Malt Whiskey as a tonic, the advertisement was calculated to convey the impression that she was a nurse, and that both for herself, and as nurse, she had used Duffy's Malt Whiskey as a tonic. This being the whole of the libel charged, and there being no averment

Digitized by Google

of special damages, the question is: Is such a publication libelous per se? We think not. It is not, in our opinion, libelous, per se, to say of a person that she is a nurse, or that she has used as a tonic Duffy's Pure Malt Whiskey, or has recommended its use. Nor do we think that these things said of a person, independently of other averments or circumstances, make out a case to go to a jury for determination. Doubtless there are people, by whom the use of whiskey as a tonic is considered wrong; and there may be people among whom to be a nurse, is considered something less desirable than not to be a nurse. But the world has not yet arrived at a consensus of opinion on these matters, that to say these things of a person is, independently of all other considerations, to libel him.

This brings us to the other count—that the publication of the advertisement is an invasion of plaintiff in error's right of privacy. The difficulty with this count, and with the proof in support of it is that defendant in error stood in relation to the advertisement as printer and distributer only, acting without knowledge that the face printed and distributed was that of plaintiff in error, or was not that of the person whose face it purported to be; and as printer and distributer of matter offered as advertising matter, there cannot be indulged that presumption of malice that might possibly be indulged if the matter were printed as a part of the newspaper's collection of news. Now where there is no malice, and no technical trespass to realty or personalty, or other case involving the adjudication of title, or some other substantial right, which it was important to the plaintiff to establish, the maxim de minimis non curat lex is in some states applied, and recovery for nominal damages not allowed.

But we need not put an affirmance of the judgment below upon this ground. There was no request made in the court below for the allowance of nominal damages. There is no assignment of error that nominal damages were not allowed; so that there may be applied, we think, the doctrine prevailing in Indiana, New York, and other states (no Illinois case, or cases from the United States Supreme Court having been brought to our attention) that a judgment under such circumstances will not be reversed for failure alone to give nominal damages. Rhine, Adm'r, v. Morris, 96 Ind. 81; Platter v. The City of Seymour, 86 Ind. 323; Funk v. The Evening Post Publishing Co., 76 Hun (N. Y.) 497, 27 N. Y. Supp. 1089.

The judgment of the Circuit Court is affirmed.

(154 Fed. 333.)

THE FRI.

(Circuit Court of Appeals, Second Circuit. April 30, 1907.)

No. 1,991.

1. SHIPPING—CONTRACT OF AFFREIGHTMENT—BILL OF LADING GIVEN TO CHARTERER.

When the charterer of a vessel is the shipper of the cargo, a bill of lading given by the master operates merely as a receipt for the goods and a document of title, and never, as between the shipowner and charterer, affects the terms of the charter party.

Digitized by Google

2. CONTRACTS—LEGALITY — PUBLIC POLICY — ENFORCEMENT OF FOREIGN CONTRACT—PROVISION EXEMPTING CHARTERER FROM LIABILITY FOR NEGLIGENCE.

A provision in a contract of affreightment exempting a carrier by sea from liability for loss or damage to cargo "occasioned by negligence, default or error of judgment of the pilot, master or mariners," may be enforced in a court of the United States where the contract was made in a country by whose laws such stipulation was legal and no part of it was to be performed in the United States, and where it related to the transportation of property on a foreign vessel on a voyage which did not include a port of the United States.

[Ed. Note.—For cases in point, see Cent. Dig. vol. 11, Contracts, § 498.]

3. SHIPPING—CHARTER PARTY—CHARTER OF AFFREIGHTMENT—LEGALITY OF PROVISIONS—PUBLIC POLICY.

When a charter party gives to the charterer the full capacity of the ship, the owner is not a common carrier, but a bailee to transport as a private carrier for hire, and a condition in such a contract, to which the Harter act (Act Feb. 13, 1893, c. 105, 27 Stat. 445 [U. S. Comp. St. 1901, p. 2946]) has no application, exempting the shipowner from liability on account of the carelessness of its employés, is not contrary to public policy.

Appeal from the District Court of the United States for the Eastern District of New York.

For opinion below, see 140 Fed. 123.

F. B. Brown and Butler, Notman & Mynderse, for appellants.

A. C. Weil and R. Weil, for appellees.

Before WALLACE, LACOMBE, and TOWNSEND, Circuit Judges.

WALLACE, Circuit Judge. The libel in this action was filed to recover the value of 706 head of cattle and 309 calves, belonging to the libelants, and shipped by them on the steamship Fri in September, 1902, at the port of Carthagena, United States of Colombia, for transportation to Cienfuegos, Cuba. The vessel sailed for Cienfuegos on September 24th, and two days later, shortly after midnight, stranded on the Bajo Nuevo reef, and in consequence the cattle had to be thrown overboard and were lost.

The stranding was caused by a fault of navigation on the part of the master of the steamship in failing, when he laid the vessel's course late in the afternoon of September 25th for passing to the eastward of the reef, to make due allowance for the strong set of the ocean current to the westward. He was an experienced navigator, but he had never navigated a vessel in that part of the Caribbean Sea, and relied concerning the force and direction of the prevailing currents upon the information he had sought from other navigators, and upon the instructions given in the charts and official publications with which he had been provided. But he permitted his judgment to be unduly influenced in departing from these instructions by his deductions based upon his own observations throughout the preceding day.

The controlling question presented by this appeal is whether under the contract of affreightment the vessel was relieved of liability to the libelants for a loss arising from this fault of navigation. The case involves to some extent a consideration of the law of the United States of Colombia, the country in which the contract was made.

Digitized by Google

The material provisions of the statutes of Colombia are those which provide that in the absence of a charter party the terms and conditions of a contract of affreightment are those stated in the bill of lading, and require the charter party to be in writing, or established by documentary or written evidence where the freight exceeds 200 pesos ($2), and those which permit parties to renounce any rights which relate only to the private interest of the renouncer. The testimony of the experts, lawyers of Colombia, justifies the conclusion that the unwritten law of the country permits and gives effect to stipulations in contracts of affreightment whereby the vessel and her owners are exempted from responsibility on account of errors or carelessness of employés in navigating the vessel.

The cattle were shipped pursuant to a charter party agreed to between the libelants and the owners of the steamship, in form such as had been executed between the parties on former occasions when the libelants had chartered steamers for cattle shipments of the vessel owners. It happened, however, that at the time of this agreement none of the blank charter parties were accessible, and the parties agreed that the blank forms such as had been customarily used between them should constitute the contract except as to the terms of freight. This agreement is satisfactorily established by documentary evidence. The shipper's agents by letter inquired whether the shippers accepted the clauses of the customary charter party, and to this letter the libelants replied in effect that their only objection was that they had not promised to pay freight for as many cattle as the Fri should carry, but only for as many cattle as they were able to load. Subsequently the master of the Fri delivered a bill of lading to the libelants, which was accepted by them, reciting $4,250 as the gross freight, a sum equivalent to the full capacity of the vessel. The libel alleges this sum as the agreed freight.

The blank form of charter party which had customarily been signed by the parties provided that the vessel should have the fittings and means of ventilation to comfortably and properly carry the cattle, and that the charterers should load the full capacity of the vessel, and contained a stipulation exempting the vessel and her owners from liability for errors of navigation "occasioned by negligence, default or error of judgment of the pilot, master or mariner." The bill of lading which was delivered to the libelants provided, among other things, that the shipment should be "subject to all the terms and provisions of, and all the exemptions from, liability contained in the act of Congress of the United States approved on the 13th day of February, 1893, c. 105, 27 Stat. 445 [U. S. Comp. St. 1901, p. 2946], meaning the act known as the "Harter Act."

The ground upon which the court below condemned the vessel was that the disaster was caused by the negligence of the master, that the stipulation in the charter party was qualified by the provision in the bill of lading in reference to the Harter act, and that it had not been so satisfactorily proved by the owners of the vessel that they had used due diligence in the selection of the master as to enable them to obtain the benefits of the Harter act. In his opinion the District Judge said, speaking of the master:

Digitized by Google

"The variety of his long experience at sea indicates sufficient skill to conduct the steamer during a four days' voyage without collision with the reef. He was careless in gathering facts, or in failing to use facts that were plainly laid before him in a printed book. Capacity to perform a duty includes not only technical skill, but also disposition to use the same."

It appeared by the proofs, and was undisputed, that the master for over 15 years had navigated ocean vessels as master in many seas. Before he was appointed to the command of the Fri by her owners he had been in command of another steamship of theirs for over a year, and he had made several voyages in command of the Fri before the voyage upon which the disaster took place. They had had an ample opportunity to estimate his capacity. It would seem to be holding them to an extreme and impracticable rule of diligence to require them to give better proof of his general competency than was actually shown. The testimony in respect to his navigation upon the voyage in question, to which it is not necessary to advert, was sufficient to show his competency generally; and it does show that the disaster happened not through his incompetency or inefficiency, but by putting his own judgment, based upon his general experience and what he thought he had ascertained respecting the force and direction of the currents during the previous two days, against the instructions of the books and charts with which he had been provided. Passing, however, the question whether the evidence was not sufficient to prove that the owner of the vessel had exercised due diligence to select a competent master, and therefore sufficient to exempt the vessel in view of the provisions of the Harter act, it remains to be considered whether the court below was correct in deciding that the stipulation in the bill of lading so far qualified the stipulation in the charter party as practically to displace it.

The bill of lading was a printed form adapted for use when the owners of the Fri chartered any of the vessels of their line for voyages to ports of the United States, and, if the present charter had been for a voyage to one of these ports, the stipulation would in some respects have afforded them a larger protection than they would have obtained under the charter party. It is quite inadmissible to consider it as enlarging a liability which it was designed to restrict. This is so, irrespective of the particular circumstances. As between the original parties to it a bill of lading never affects the terms of the charter party, although it may be resorted to to resolve doubts, if any there are, in particulars as to which the charter party is ambiguous. "The usual practice is for the master, or agent of the shipowner, to give bills of lading for the cargo, although it may be shipped under a charter party. When the charterer himself ships the goods these bills of lading operate as receipts for them, and also as documents of title which he can negotiate, and thereby constructively transfer possession of the goods. But they do not, as between the shipowner and the charterer, operate as new contracts, or as modifying the contract in the charter party. Where the bill of lading has been transferred for value to third persons who are strangers to the charter party, its terms become very important. It then constitutes an undertaking on the part of the shipowner with the holders, which is independent of the charter

Digitized by Google

party, except so far as that is expressly incorporated in it." Carver, Carriage by Sea, 151, 152. It constitutes the contract between the parties where there is no charter party, but where there is a charter party it never supersedes any unequivocal provisions therein. This has long been settled by the adjudications. The rule is that where there is a charter party the bill of lading operates as the receipt for the goods, and as a document of title passing the property of the goods, but not as varying the contract between the charterer and the shipowner. Wagstaf v. Anderson, 5 C. P. Div. 171, 177; Rodocanachi Sons & Co. v. Milburn Bros., 6 Asp. 100, 103; Sewell v. Burdick, 10 App. Cas. 74, 105; The Chadwick (D. C.) 29 Fed. 521.

Finding, as we must, that the contract of affreightment between the parties contained an explicit condition exempting the vessel from liability for a loss arising under the circumstances disclosed by the evidence, and that the scope of this condition was not in the slightest degree narrowed by the stipulation in the bill of lading, and finding also, as we must, that by the law of the country where the contract was made such a condition is effectual to restrict the liability of the carrier, it only remains to consider whether the contract will be upheld by the courts of the United States.

By the decisions of the federal courts such stipulations in a contract made in this country, or made abroad and to be performed here, when the parties to them are a common carrier and a shipper of goods, are deemed contrary to public policy; and by the Harter act, when they are made by the owner of any vessel transporting merchandise or property "from or between ports of the United States and foreign ports," are declared to be unlawful. The rule is familiar that the law of a place where a contract is made governs its nature, obligation, and interpretation, unless it appears that the parties when entering into the contract intended to be bound by the law of some other state. It is also a familiar general rule that a contract valid in the state where it is made will be enforced upon principles of comity in the courts of a state by whose law it is invalid, and this even though the contract contravenes a statute of the state in which the suit is brought. This is illustrated by the cases in which such contracts have been enforced though violating the Sunday laws, or the usury laws, of the forum. Of course, this comity does not extend to contracts that are immoral, or repugnant to the fundamental law or the public policy of the state where they are sought to be enforced. Brown v. Am. Finance Co. (C. C.) 31 Fed. 516; Swann v. Swann (C. C.) 21 Fed. 299; Brown v. Browning, 15 R. I. 422, 7 Atl. 403, 2 Am. St. Rep. 908; Greenwood v. Curtis, 6 Mass. 358, 4 Am. Dec. 145; Akers v. Demond, 103 Mass. 318; Kennett v. Chambers, 14 How. 38, 14 L. Ed. 316; Oscanyan v. Winchester Arms Co., 103 U. S. 261, 277, 26 L. Ed. 539.

None of the adjudications in the federal courts decide that the stipulation is void as contrary to public policy, and that it will not be enforced for that reason, in cases where the contract of affreightment was made in a state by whose laws the stipulation is valid, when no part of it is to be performed in this country, and when, as in the case here, it does not relate to a contract or vessel within the terms of the Harter act. In Botany Worsted Mills v. Knott, 82 Fed. 471, 27 C.

Digitized by Google

C. A. 326, this court refused to enforce such a stipulation in a case where there was no evidence to indicate that the law of the place of the contract differed from the law of this country. In The Kensington, 94 Fed. 885, 36 C. C. A. 533, this court held that the contract could not be enforced "where both parties to the contract are citizens of the United States and the place of the completion of the contract is within this country." That case was affirmed by the Supreme Court in 183 U. S. 263, 22 Sup. Ct. 102, 46 L. Ed. 190. Liverpool & Great Western S. S. Co. v. Phenix Ins. Co., 129 U. S. 397, 9 Sup. Ct. 469, 32 L. Ed. 788, was a case where the contract of affreightment was made in an American port by an American shipper, with an English steamship company doing business there, for the shipment of goods there, and their carriage to and delivery in England, and the decision proceeded upon the ground that the contract was an American contract, and governed by American law so far as regarded the effect of the stipulation.

We are unable to appreciate how a contract made in a country where it is valid, no part of which is to be performed in this country, and relating to the transportation of property on a foreign vessel on a voyage which does not include an American port, can be one which particularly concerns the public policy of the United States. When the parties to such a contract choose to resort to the courts of this country to enforce it, there seems to be no sound reason, as there certainly is no direct authority, for deciding that the contract shall not be enforced in substance and effect as they agreed.

In this case, however, a common carrier was not a party to the contract. When a charter party gives to the charterer the full capacity of the ship, the owner is not a common carrier, but a bailee to transport as a private carrier for hire. Hutchinson, Carriers (2d Ed.) 73. See, also, Sumner v. Caswell (D. C.) 20 Fed. 249, and the authorities there referred to. It has not yet been decided by any court that a condition in such a contract, to which the Harter act has no application, relieving a shipowner from liability on account of the carelessness of its employés, is contrary to public policy.

The decisions which deny the validity of such stipulations proceed upon the ground that the carrier is exercising a public employment, and cannot by such stipulations relax his obligations to the public. Private carriers are not subject to the exceptional or extraordinary duties and liabilities of common carriers, and they may carry for whom they choose, and for such compensation and upon such conditions of liability as may be agreed upon. The contracting parties stand upon equal terms, and can make such a contract as they think reasonable. Angell, Law of Carriers, 59.

We conclude that the stipulation in the charter party was valid, and the defense founded upon it should have been sustained by the court below.

The decree is accordingly reversed, with costs, and with instructions to dismiss the libel.

Digitized by Google

(154 Fed. 273.)

LEWIS v. PECK et al.

(Circuit Court of Appeals, Seventh Circuit. April 17, 1907. Rehearing Denied May 17, 1907.)

No. 1,335.

INJUNCTION—VIOLATION—JURISDICTION TO GRANT INJUNCTION.

A decree of a federal court foreclosing mortgages on the property of corporation and directing a sale thereof, after determining the rights and priorities of the parties under mortgages given by successive owners, provided that the purchaser at the sale should hold the property free and discharged from the lien of all the mortgages and free from all claims of every kind or nature of any of the parties or those claiming under them; also, after reserving certain questions for future disposition, it provided that "jurisdiction of this cause is retained in this court for the purpose of determining all such reserved questions and of enforcing the conditions of this decree and of any further order made herein, and any party to this proceeding may apply to the court for further orders and directions at the foot of this decree." A sale was made, and certain dissatisfied bondholders under one of the mortgages, who were not parties to the suit, except by representation by the trustee in the mortgage, appeared individually and objected to its confirmation. Their objections were overruled and the sale confirmed by an order, which, inter alia, prohibited and enjoined all parties to the suit and all persons claiming through or under them, their attorneys, solicitors, etc., "from setting up any pretended or alleged title against the title of the purchasers." Such dissatisfied bondholders, having been denied an appeal on the ground that they were not parties, filed a bill in a state court against the purchasers and others, praying for a foreclosure of their mortgage, whereupon their solicitor was cited into the federal court on petition of the purchasers and adjudged in contempt for violation of its injunction in instituting such suit. *Held*, that the injunctional provision of the order of confirmation was not within the power reserved by the court by the decree to enforce its conditions, and, not being within any issue in the suit, was without jurisdiction and void as against the individual bondholders, or their counsel, who were not parties in any sense which would confer jurisdiction over their persons, to make such order binding upon them and to deprive them of their right to a hearing on their alleged individual rights in any court of competent jurisdiction; and that it afforded no basis for the proceedings in contempt.

[Ed. Note.—Liability of attorneys, see note to Anderson v. Comptois, 48 C. C. A. 7.]

Grosscup, Circuit Judge, dissenting.

In Error to the Circuit Court of the United States for the Southern District of Illinois.

This writ of error brings for review a judgment of the Circuit Court and sentence of imprisonment against the plaintiff in error, James Hamilton Lewis, upon finding of contempt of court, in the violation of an injunctional order of such court. The proceedings in which the injunctional order was issued were under the title of consolidated actions of Farmers' Loan & Trust Company, Trustee, and United Waterworks Company, Limited, v. New England Waterworks Company, Alton Waterworks Company et al.—one a bill for foreclosure of a mortgage and the other a creditors' bill—upon which decree had theretofore been entered, which is the same decree appealed from in New England Waterworks Co. v. Farmers' Loan & Trust Co., 136 Fed. 521, 69 C. C. A. 297, and affirmed by this court, and the general nature of the bills and decree are sufficiently described in the opinion there filed and reported.

Digitized by Google

Upon the coming in of the master's report of sale under that decree, objections to confirmation of the sale were interposed by one Allen A. Brown and other persons, as individual bondholders under a trust deed, made by the Boston Water & Light Company (a defendant in such decree) to the International Trust Company, trustee (also a defendant therein), setting up, among other grounds, that they were not made parties to such suits, had no notice thereof, and were "being deprived of their property without notice and without due process of law"; also that the purchase price was grossly inadequate. The plaintiff in error appeared for and represented these bondholders in opposing the confirmation. On May 5, 1905, the court entered an order or decree of confirmation of the sale, as reported, to Samuel L. Peck, G. R. Leighton, Charles G. Sanford, and Russell Frost, a committee representing bondholders, for the price named. The order recites, among other matters, that the purchaser moved to strike out the objections filed by Brown and others, and then orders "that the said objections and exceptions of the said Allen A. Brown and others be and the same are hereby overruled and held for naught," and that the sale is thereupon confirmed; and the following is the concluding provision:

"And it is further ordered, adjudged, and decreed that, upon the completion of the payment of the purchase price by the said purchasers, the delivery to them of the deed of the said master and the delivery of the property to them by the said receiver, that the title to the said property and assets as against each and every party to this action, and all persons claiming, or to claim, under them, or either of them, be vested absolutely in the said purchasers and their assigns, and all parties to this suit, and all persons claiming, or to claim, by, through, or under them, be, and they and their and each of their attorneys, solicitors, officers, and agents are, forever prohibited and enjoined from setting up any pretended or alleged title, as against the title of the said purchasers acquired by means of said master's deed in this decree mentioned, and which said pretended or alleged title may have arisen by, through, or under any of the said parties to the said cause, and from in any way interfering with or disturbing the said purchasers, or their assigns, in the full and free use and occupation and enjoyment of all the said property so acquired by said purchasers by means of said sale and said deed from the said master.

"It is further ordered, adjudged, and decreed that the said purchasers have leave at the foot of this decree to apply for further directions and for any amendment thereof until the last day of the next term of this court, and for that purpose this cause will, upon adjournment of the present term of this court, stand continued upon the docket of this court until the last day of the next term thereof."

The objecting bondholders then made application to Mr. Justice Day of the Supreme Court for allowance of an appeal to that court, but the appeal was disallowed with a letter addressed to the plaintiff in error, which is made a part of the record, stating in effect that the bondholders were not named as parties, so that they were not entitled to a review on appeal, remarking that "their rights, if invaded, must in my opinion be worked out in an original proceeding." Subsequently, Brown and other bondholders filed a bill in the circuit court of Madison county against the Boston Water & Light Company and other defendants, including the purchasers under the foreclosure decree above mentioned, for foreclosure of their alleged mortgage, and the plaintiff in error appeared therein as solicitor for the complainants. Thereupon the purchasers under the foreclosure decree petitioned for a rule to be entered by the Circuit Court of the United States, upon the plaintiff in error, to show cause why he should not be punished for contempt of court for filing such bill and issuing summons thereupon, in alleged violation of the injunction of that court. The petition was entertained by the court, under the title of the original consolidated suits, upon an order "that said causes be redocketed for the purposes of said petition," and that a citation issue thereupon.

The plaintiff in error submitted his sworn answer to such rule, disclaiming "any intention on his part to violate any lawful orders or decrees en-

Digitized by Google

tered by" the court, and stating that he represented Brown and other bondholders, as their duly authorized attorney; and having applied for an appeal to the Supreme Court, which was denied with an opinion by Mr. Justice Day which is annexed to the answer, he so proceeded in behalf of such bondholders, believing that they were neither parties to nor affected by the decree of this court and were entitled to so proceed. The court on April 16th entered the order appealed from, which reads (after the title) as follows:

"In the matter of the petition of Samuel Peck, G. Ralph Leighton, Charles G. Sanford, and Russell Frost for a rule against James Hamilton Lewis to show cause why he should not be punished for a contempt of court in violating the injunction contained in the decree made and entered in the above-entitled consolidated cause on the 5th day of May, A. D. 1905.

"The above-entitled matter coming on to be further heard and the court being now fully advised finds that the said James Hamilton Lewis did file in the circuit court of Madison county, Ill., a certain bill wherein Allen A. Brown, trustee, Robert B. Wason, Harriet N. Houghton, James Schouler, C. A. Damon, Joseph C. Foster, Chas. M. Page, George W. Fairbank, M. C. Grier, Sabra Hodgkins, Wm. B. Trask, and Mary A. Evans are complainants and Boston Water & Light Company, a corporation, International Trust Company, a corporation, Alton Waterworks Company, a corporation, George W. Sumner, and Chester B. Sumner, executors of the estate of Wm. H. Sumner, James Howe, Orin Warren, Alice G. Page, John Farquhar, administrator of estate of Benjamin F. Dudley, deceased, George F. Lovett, Vernon Prouty, Frank Dromgoole, the C. H. Venner Co., a corporation, Cidele Venner, Samuel Peck, G. Ralph Leighton, Charles G. Sanford, Russell Frost, and unknown parties claiming an interest in the property described in the said bill, are defendants, praying for the foreclosure of a certain mortgage executed October 1, 1897, by the Boston Water & Light Company, of the state of Maine to the International Trust Company of the state of Massachusetts, to secure the payment of 200 bonds bearing same date for $1,000 each. The court further finds that said action is in violation of the injunction order of the Circuit Court of the United States entered May 5, 1905. It is therefore ordered that said James Hamilton Lewis be and is hereby held to be in contempt of this court and is sentenced to be imprisoned in the Sangamon county, Ill., jail for 60 days or until further order of this court. In case the above-described cause now pending in the circuit court of Madison county, Ill., is dismissed within five days from this date, said sentence of imprisonment is to be suspended."

On April 17th, under compulsion of such order, the plaintiff in error dismissed the suit so commenced in Madison county circuit court, and advised the Circuit Court of the United States of such dismissal, pursuant to and under the compulsion of such order, to save himself from the imprisonment thus imposed.

For jurisdiction to enter the injunctional order contained in the order or decree of confirmation, paragraphs 22, 25, 26, and 27 of the original decree are relied upon. Paragraph 22 provides that the purchaser thereunder, after delivery of the premises and property, "shall hold possession and enjoy the same with all rights, privileges, immunities, and franchises pertaining thereto as fully as said Alton Waterworks Company, the New England Waterworks Company, and Boston Water & Light Company, or the receiver therein, now hold or enjoy the same, or held or enjoyed, or were entitled to hold or enjoy the same at any time heretofore, and shall hold the same free and discharged" from the lien or incumbrance of all the mortgage trust deeds in this decree mentioned, and free from all claim or claims of every kind and nature of all parties to this cause and those claiming under them.

The other paragraphs read as follows:

"(25) All questions not hereby disposed of, including the settlement of the accounts of the receiver and his discharge and the amounts to be allowed said receiver and his counsel, and the amounts to be allowed said trustee, complainants, and their solicitors, and the amount to be allowed the master, and the application of moneys in the hands of the receiver to bonds and coupons or upon allowances and costs, are hereby reserved for future adjudication,

Digitized by Google

and any party interested in such reserved questions may at any time, either before or after sale, apply to this court at the foot of this decree, for further relief in respect thereto.

"(26) Any party interested in the questions hereinbefore reserved concerning coupons and interest [referring to claims of C. H. Venner Company reserved in paragraph 16, not in question], may at any time apply to this court at the foot of this decree for further relief in respect thereto.

"(27) Jurisdiction of this cause is retained in this court for the purpose of determining all such reserved questions and of enforcing the conditions of this decree and of any further order made herein, and any party to this proceeding may apply to the court for further orders and directions at the foot of this decree."

Elijah N. Zoline, for plaintiff in error.

Levi Davis, for defendant in error.

Before GROSSCUP, BAKER, and SEAMAN, Circuit Judges.

SEAMAN, Circuit Judge, after stating the facts, delivered the opinion of the court.

The ultimate facts involved in this review are simple, however serious their import in the administration of equity powers and duties, and their effect in the commitment of the plaintiff in error for contempt. The propositions of law upon the general powers of the trial court to restrain the prosecution of cognate suits in other courts, and in reference to the rights and privileges of counsel in actions so brought—which are presented in one of the aspects of this adjudication and discussed in the arguments—are not free from difficulty under the authorities. It is not needful, however, to decide either of these important general questions, unless the validity of the commitment rests upon their solution.

The injunctional order of which violation is adjudged was not contained in the express terms of the foreclosure decree, which was entered in 1903 (and affirmed upon appeal to this court), but was made a part of the order or decree entered May 5, 1905, confirming the sale made April 18, 1905, as reported to the court under the decree of 1903. Primarily, therefore, jurisdiction must appear for making, in that proceeding and at that stage, an order which became operative as a personal injunction against the individual bondholders and their special counsel, applicable to the alleged violation by the plaintiff in error, to uphold the commitment. Neither the bondholders nor the plaintiff in error were named as parties to the decree or subsequent order, nor cited in or recognized as parties of record. True, the trustee named in the trust deed securing the bonds in controversy was a party; and the general rule under such instrument and relation is firmly established that the trustee represents the bondholders in such foreclosure proceedings involving interests under the trust deed, and that his presence is sufficient to bind the rights and interests of bondholders, who are thus constructively served and present. In the foreclosure proceedings thereupon it may well be assumed that the court possessed ample power to make all needful orders or provisions, interlocutory or final, not only to foreclose interests which are represented, but to protect the res and interests involved in the litigation for complete administration.

Digitized by Google

The plaintiff in error, as attorney for several holders of bonds secured by one of the trust deeds involved in and foreclosed under the above-mentioned final decree of the federal court, filed a bill in one of the state courts, on behalf of such bondholders, wherein an independent foreclosure was sought under the trust deed, in despite of the prior decree and sale, with the purchasers thereunder named as defendants among other parties. This suit was instituted in March, 1906, when the federal proceedings were closed, with all issues therein settled, sale confirmed, and the purchasers in possession. The question whether the action was well advised or seemly, in any view, is beside the inquiry of contempt in thus attempting another foreclosure, which rests alone on the validity and interpretation of the injunctional order entered in the federal court on May 5, 1905. When that order was made, the matters before the trial court, as disclosed by the record, were the report of the master upon the foreclosure sale made under the decree and of the proceeds arising therefrom, together with the objections filed to confirmation of such sale. The issues were: Shall the sale be confirmed, with direction to convey and deliver possession to the purchasers, and distribute the proceeds in conformity with the decree? Or shall the sale be set aside, and resale or other procedure ordered? Provisions for either course were plainly within the power of the court, and its conclusions and order in conformity with the first-mentioned course are not open to question here. The further order, however, which is challenged, is a provision, not only vesting title in the purchasers "as against each and every party" to the action and "all persons claiming, or to claim, under them," but that all parties and persons "claiming or to claim by, through, or under" either party, and their attorneys and agents, "are forever prohibited and enjoined from setting up any pretended, or alleged, title as against the title of the said purchasers," and "from in any way interfering with or disturbing the said purchasers, or their assigns, in the full and free use and occupation and enjoyment of all the said property so acquired." Passing the contentions on behalf of the plaintiff in error that these terms are not applicable to the individual bondholders, and are not violated by the orderly commencement of an independent suit by bondholders, not made parties, we assume the premise for testing the validity of the injunction, that its scope was sufficient to include such suit, as the commitment for contempt rests wholly upon that purpose and interpretation.

The final decree theretofore entered (1903) was complete and binding upon all parties for the intended foreclosure, and for definition of the title which would be conveyed to the purchaser of the res upon sale, together with provisions for and terms of conveyance and possession. Except for the last-mentioned purposes of sale and conveyance, and the questions and objects reserved in the concluding paragraphs (25, 26, 27), the controversy was closed, and no further relief was open in the suit. To carry forward these specific purposes and determine the reserved questions, orders and directions were authorized at the foot of the decree, but jurisdiction was not retained beyond those which were so specified, all executory in their nature.

The sole reliance for support of the injunctional order in the terms

Digitized by Google

of the decree is in the expression of paragraph 27, which includes "enforcing the conditions of this decree" as thus reserved. Various provisions of the decree are stated in the form of conditions, and plainly within this reservation. Thus foreclosure sale is conditioned upon the failure of the defendants to pay the sums adjudged due within the time specified; and, when sale occurs, it is made subject to conditions, both of performance by the purchaser and approval by the court, with provision for resale in the event of disapproval or nonperformance. The terms or recitals which define the interests and title passing to the purchaser upon sale are in no sense "conditions of the decree" which can be enforced by subsequent orders otherwise than by the conveyances and delivery of possession as directed. To that end, it cannot be doubted that needful orders were authorized, injunctional or otherwise, to preserve the integrity of the property and subject-matter in the hands of the court from interference or disturbance in any manner, to complete the performance of such conveyance and delivery. No remedy, however, not within the contemplation of the foreclosure decree was thus left open to be administered at its foot. The purchaser acquired under the sale and conveyance all the title and interests of parties which the decree was competent to confer. With no obstacle in the way of the conveyance and possession can the jurisdiction so retained extend to injunctional relief in favor of the purchasers (not parties in any sense until approved as purchasers), to reach these dissatisfied bondholders individually (not parties of record), to enjoin them from suing upon the bonds?

The right of the purchaser or his successor in interest to invoke the jurisdiction of the trial court, by supplemental bill in the action, against a disturber of title and possession so acquired, in derogation of the decree of foreclosure, is expressly upheld in Julian v. Central Trust Co., 193 U. S. 93, 109, 24 Sup. Ct. 399, 48 L. Ed. 629, so that the exercise of jurisdiction to prevent actual interference is unquestionable, when the parties are before the court under issues duly made. No authority is brought to our attention, which sanctions either (1) supplementary injunctional orders of the present nature, without personal service and issue raised upon the infringement; or (2) enjoining the mere commencement of suits in a state court, with no disturbance of possession, unless within the exception named in section 720, Rev. St. [U. S. Comp. St. 1901, p. 581]. And we are of opinion that the order in question, in so far, at least, as it was treated as operative against the filing of bills on behalf of individual bondholders, was not within the limited jurisdiction reserved in the trial court.

The doctrine is well established that the right of a court of equity to decide all questions arising in the case, when jurisdiction is once acquired, is subject to important limitations; that it extends only to controversies which arise and are submitted by proper proceedings between adverse parties. As stated in Windsor v. McVeigh, 93 U. S. 274, 282, 23 L. Ed. 914:

"All courts, even the highest, are more or less limited in their jurisdiction. * * * Though the court may possess jurisdiction of a cause, of the subject-matter, and of the parties, it is still limited in its modes of procedure, and in the extent and character of its judgments. It must act judicially in

Digitized by Google

all things, and cannot then transcend the power conferred by the law. * * * So a departure from established modes of procedure will often render the judgment void. * * * The decree of a court of equity upon oral allegations, without written pleadings, would be an idle act, of no force beyond that of an advisory proceeding of the chancellor. And the reason is that the courts are not authorized to exert their power in that way."

When a court transcends the limits of its authority in a given case, its orders are void, not merely erroneous. Id.

In the proceedings of May 5, 1905, the sole questions before the court, as before stated, were the action to be taken in reference to the sale as reported, and disposition of the proceeds. No individual holders of bonds were cited or called in to answer any application for the injunctional order; nor does it appear that application was made for it. It is true that certain of the bondholders objected to confirmation of the sale, and written specifications were filed on their behalf, by the plaintiff in error, as "appearing separately for bondholders to object to confirmation"; but upon the hearing it was ordered that "the said objections and exceptions" be and they were "overruled and held for naught." These objectors were there for no other purpose, and were out of the proceeding when their objections were overruled; and no conduct appears upon the part of either to authorize the exercise of jurisdiction in personam over the plaintiff in error or his clients to restrain them from setting up or suing upon their supposed independent claims, however groundless such claims may appear when brought to hearing.

The contention in support of the order and its application to the suit commenced by the plaintiff in error is twofold and substantially this: That the order was valid against the trustee, who represented the bonds in controversy, and was a party to the proceedings, and was thus authorized and made binding as a personal injunction against each of the bondholders so represented. We are not satisfied that the premise is sound of right to enjoin the trustee; but, however that may be, we are satisfied that the injunction was inoperative as against the proceeding in question on the part of the bondholders.

The property and subject-matter of the decree were neither molested, nor threatened with disturbance in the hands of the court or pending administration, so that no need appears for an injunction to preserve the status. If suit were commenced upon the bonds, either in that court or elsewhere, no deprivation of rights which were lawfully conferred by the prior decree of the federal court could have judicial sanction, as the application for and grant of a restraining order necessarily assumes to justify the restraint. The mere institution of suit in such case does not disturb the prior jurisdiction or adjudication in any degree. As said by Judge Grosscup, speaking for this court, in Copeland v. Bruning, 127 Fed. 550, 552, 63 C. C. A. 435, in reference to like contention that a suit in the state court "challenged the decree of the federal court":

"Let this be admitted, even then the injunction is not justified, for to the extent that the subject-matter of the suit in the state court was already settled by former adjudication, the defense should have been by plea in the court where the suit was brought, and not by injunction in another jurisdic-

Digitized by Google

tion. No possession of the res was involved, and no conflict of courts could have followed, that would have affected the decree in the United States court."

Again, in Royal Trust Co. v. Washburn, B. & I. R. R. Co., 139 Fed. 865, 867, 71 C. C. A. 579:

"The point at which interference with the possession of the federal court begins is not the invoking in the state court of its power in that respect, but the attempt to exercise such power, to the extent that the exercise of such power would interfere, actually and physically, with the possession of the property by the United States court."

In the case last cited an adjudication of the federal court committing attorneys for contempt of that court was reversed, although they had applied for and obtained an injunction in a state court against the execution by officers of the federal court of the final decree of such court, and had delivered the restraining order to the sheriff for enforcement. While commitment of the sheriff was upheld, for actual invasion and interference, the attorneys were held not guilty, as their procedure was not an invasion of the federal jurisdiction. Section 720, Rev. St. [U. S. Comp. St. 1901, p. 581], expressly prohibits an injunction "to stay proceedings in any court of a state," except as authorized in bankruptcy; and, while this provision is not applicable when the jurisdiction of the federal court is disturbed thereunder by actual invasions (Julian v. Central Trust Co., supra), it may rightly be applicable to deny injunctional relief against orderly proceedings in any court, even by parties, without such invasion (Guaranty Trust Co. v. North Chicago St. R. Co., 130 Fed. 801, 805, 65 C. C. A. 65). The court may exercise ancillary jurisdiction, as in the Julian Case, when properly invoked on behalf of the purchaser under the decree, to prevent invasion of rights which were adjudicated and vested in such purchaser; but we do not understand that sanction appears in any of the authorities, either for warranty of title or possession upon judicial sale, or for an injunctional order to prevent future litigation against the purchaser, beyond the saving effect of the decree. Under the doctrine of caveat emptor, which is strictly applicable to all judicial sales (The Monte Allegre, 9 Wheat. [U. S.] 616, 645, 6 L. Ed. 174; Rorer on Judicial Sales, §§ 174, 475, 476, 528), authority for such provision in the order may well be doubted, even as against the trustee.

Laying aside, however, the question whether such injunction can be granted as against parties who are personally served, the plaintiff in error and bondholders represented by him were not parties in any sense which would authorize jurisdiction over their persons to make such order binding upon them. Assuming that the foreclosure suit and decree bound the holders of all bonds, through the substituted service upon the trustee, it was thus effectual only as a proceeding in rem and to the extent of their interest in the res, and authorized no procedure or relief in personam against the individual bondholders, constructively bound by such decree. Pennoyer v. Neff, 95 U. S. 714, 727, 24 L. Ed. 565; 9 Notes U. S. Rep. 339. So, if the injunctional order were germane, authorized, and operative as

Digitized by Google

against the trustee, it was not operative against the individual bondholders, who were not served and not subject to jurisdiction in personam. Hawley v. Fairbanks, 108 U. S. 543, 551, 2 Sup. Ct. 846, 27 L. Ed. 820; Parsons v. Greenville, etc., R. Co. (per Mr. Chief Justice Waite), 1 Hughes, 279, Fed. Cas. No. 10,776; In re Reese (C. C.) 98 Fed. 984, 986; Fellows v. Fellows, 4 Johns. Ch. (N. Y.) 25. Whatever the interests or rights of the bondholders may be under the terms of the trust deed—whether within the general rule and thus fully represented and foreclosed by the presence of the trustee, or exceptional as they contend—they are bound by the decree only to the extent authorized by the trust deed in such representation. If they have claims of independent right, not so represented, as they contend, they are neither within the terms of the order, as claimants under the trustee, nor subject to the jurisdiction of the trial court for any form of injunction against their exercise of independent right to sue upon such claim.

While the trust deed was before the trial court, as part of the subject-matter in the foreclosure suit, and (presumptively) construed otherwise in entering the final decree, the bondholders were not personally served and their contention was not heard in such interpretation and entry. Whatever be their actual right, or the effect to be given that adjudication, they cannot be restrained in that proceeding—to say the least, without personal service upon them—through any injunction against the trustee, from the common right of suit upon their alleged independent claim, which arises under their grantor, not under the trustee. If res judicata, or otherwise without merit, such determination, in the first instance at least, is for the forum in which such suit is brought, and the court of prior jurisdiction of the subject-matter cannot, as we believe, enjoin such procedure in another court of coordinate jurisdiction, nor can it rightly be assumed by any court, in thus directing conveyance to a purchaser under its decree, that coordinate judicial tribunals would disregard such decree or fail to give it due effect when so involved in subsequent litigation.

We are of opinion, therefore, that the injunctional order in question was without force against the individual bondholders or their attorney, and that the plaintiff in error was not guilty of contempt in his proceedings in the state court.

GROSSCUP, Circuit Judge (dissenting). Though the facts are fully and accurately stated in the opinion of the court, I shall summarize such of them, in their logical order, as are necessary to bring out the view upon which this dissent is founded.

The original bill was not the ordinary and usual bill for foreclosure, nor was the decree the ordinary and usual decree foreclosing a mortgage. The bill brought to the attention of the court the fact that certain property claimed by the New England Water Company as its own, free from the Farmers Loan and Trust Company mortgage, and mortgaged by the New England Company as unencumbered property to the International Trust Company, was not in fact property free from the Farmers Loan and Trust Company mortgage, but was property subject to the Farmers Loan and Trust Company mortgage

Digitized by Google

as after acquired property; and had not in fact been mortgaged unencumbered to the International Trust Company, but was not subject to that mortgage in any respect; and upon issues made upon these contested questions (the New England Water Company and the International Trust Company being in court for themselves and those who claimed under them) the decree of foreclosure, as a basis on which to foreclose the Farmers Loan and Trust Company mortgage, judicially determined that the property in dispute was subject to the Farmers Loan and Trust Company mortgage, and that, at the sale decreed, the purchaser should take the same free and discharged from the lien or encumbrance of the alleged mortgage by the New England Company to the International Trust Company in the decree mentioned, and free from all claim or claims, of every kind and nature, of all parties to the cause, and those claiming under them; jurisdiction being retained for the purpose of "enforcing the conditions of this decree, and of any further order made herein."

Under the decree thus entered—a decree judicially determining the legal status of the property in dispute—all the property, including the property in dispute, was offered for sale, under a provision that a committee of bondholders represented by the Farmers Loan and Trust Company might bid; and, should they become the purchasers, might pay for the same, by turning in cash sufficient to discharge a previous mortgage in which they were not interested, and by paying in cash to the bondholders not represented by the committee, their proportion of the purchase price, together with costs of suit—the bonds of those represented by the committee to be turned in for the balance; under which provisions—all of them provisions in the decree—the committee made the highest and best bid for the property.

When this sale came to the court for confirmation, the appellant appeared and filed objections as counsel for bondholders claiming under the International Trust Company's mortgage (he had also been counsel throughout the preceding litigation) on various grounds, including one that the selling price was too small, but chiefly on the ground that the individual bondholders whom he now appeared for, not having been parties, in name at least, to the previous proceedings, were not bound by the decree, and still retained, notwithstanding the decree, a lien or claim upon the property in dispute.

The filing of these objections put the posture of affairs thus: The court had a bid, based upon a decree that the purchaser was to obtain the property in dispute free and clear from the claim of the International Trust Company, and those claiming under it (meaning of course these individual bondholders); a bid that required that large sums in cash should be paid to a previous mortgagee and to bondholders not represented. But the individual bondholders claiming under the International Trust Company were now in court insisting, that as against them, notwithstanding the clear terms of the decree, the purchaser should obtain no such free and unencumbered title. So the practical question before the court was: Are these individual bondholders foreclosed by that decree, as to this disputed property, or are they not; for if foreclosed, the court could give title free and clear of encumbrance according to the provisions of the decree; while

Digitized by Google

if not, the purchasers were not obtaining the title free and clear of encumbrance that they had a right, from the decree to expect. The question was a practical question and a pressing one—one on which the court ought to have power to take a practical and effective course.

Unquestionably, to my mind, the court in overruling these objections, determined—was bound to determine—that the individual bondholders were bound by the original decree, and that the purchaser would take the property free from their claims. There is no other reason or logic in the ruling. And unquestionably too, the injunctional order included in the decree of confirmation was intended by the court as a method of protecting the purchaser against the disregard, by the individual objecting bondholders and their counsel, of this ruling—a step taken by the court to secure to the purchaser the kind of title that the court in the original decree had offered to the purchaser. Now was the court without power to put that ruling into practical effect?

The opinion from which I dissent does not hold that the court had no power, in its original decree, to order the property sold, free and clear from the claim of the International Trust Company and those claiming under it; nor that the individual stockholders, whose counsel appellant was, are not parties claiming under the International Trust Company, and for that reason not bound by that portion of the decree. On the contrary it proceeds on the assumption that in the original decree the court had such power; and that these individual bondholders are thus bound.

Nor does the opinion from which I dissent hold, that supplemental to the foregoing power the court would not have had the power, in the original decree, to enter an injunctional order restraining the International Trust Company, and those claiming under them, and their attorneys, from setting up any pretended title against the title of the purchasers acquired under the court's deed. On the contrary, respecting that question, the opinion says:

> "The propositions of law upon the general powers of the trial court to restrain the prosecution of cognate suits in other courts, and in reference to the rights and privileges of counsel in actions so brought—which are presented in one of the aspects of this adjudication and discussed in the arguments—are not free from difficulty under the authorities. It is not needful, however, to decide either of these important general questions, unless the validity of the commitment rests upon their solution."

And further on the opinion proceeds:

> "In the foreclosure proceeding, therefore, it may well be assumed that the court possessed ample power to make all needful orders or provisions interlocutory or final, not only to foreclose interests which are represented, but to protect the res and interests involved in the litigation for complete administration."

The opinion from which I dissent does not show, specifically at least, that the injunctional order subsequently entered was not known to the individual bondholders or appellant, before the acts constituting the contempt were committed; though it does state that neither the bondholders nor the plaintiff in error were named as parties to the injunctional order, nor cited in, nor recognized as parties of record.

Digitized by Google

But this last statement ignores the fact fully stated elsewhere in the opinion that the injunctional order was entered as a part of the order overruling the objections filed by appellant in behalf of these individual bondholders, and presumptively, therefore, did not escape his notice.

The opinion from which I dissent, puts forth no pretension that if the injunctional order were within the power of the court to enter, appellant can defend against the contempt proceedings on the ground, either that the proposition of law on which it was founded was erroneous; or that the proceedings were defective or irregular; or that on review on appeal, or in error, the court for any reason other than that of want of power should have vacated the order. And I take it, it is too well settled for further discussion, that a party charged with contempt may not procure a review of the injunctional order entered on any ground other than want of power of the court to enter it—may not obtain a general review of an order by simply defying it.

Assuming, then, that the court, in its original decree of foreclosure, had power to enter the injunctional order (as assumed though not decided in the opinion from which I am dissenting; but decided I think in Julian v. Central Trust Company, 193 U. S. 93, 24 Sup. Ct. 399, 48 L. Ed. 629), the opinion proceeds to find that the court was without power to enter the order, in the subsequent confirmatory decree, for the following reasons as I understand them: (a) That such an order was not within the reservation contained in the original decree; (b) That such an order was not within the issues presented to the court on the confirmatory decree; and (c) That the individual bondholders, and the plaintiff in error, were not in court at the time the injunctional order was entered, upon any issue that could eventuate in such an injunction.

I take up these reasons in the order stated. First then as to the reservation in the original decree. The original decree reserves full power of "enforcing the conditions of this decree, and of any further order made herein." Why is not that broad enough to include the condition that the purchaser, at the foreclosure sale, should take title, free and clear of the claims of the International Trust Company and those claiming under them? Indeed, the proviso just named, was one of the main conditions of the decree. Upon it rested the practical question of what amount the property would sell for, or whether the property could be sold at all. To clear up that condition, the main litigation was fought out—there was no other substantial issue in the case; so that to say now that the court, in entering its original decree, did not intend to reserve power, to the extent if necessary of all the power it possessed, to enforce that condition of the decree, by any order that it might subsequently enter, is to say that the court kept its eyes and its decree open to the smaller contingencies that might transpire, but closed both its decree and its eyes to the single great contingency that might intervene to defeat the court's purpose, and the court's power to subsequently carry out that purpose.

Assuming then that the injunctional order was within the reservations contained in the original decree, is there anything in the proposition that it was not within the issues subsequently presented to the

Digitized by Google

court on the confirmatory decree, or that appellant was not in court on that order? The individual bondholders represented by appellant, and appellant himself, were, in fact, as we have seen, in court at the time the confirmatory decree, carrying along with it this injunction, was entered. The contention of the individual bondholders that they were not bound by the original decree was necessarily before the court, as already stated, when the confirmative decree was entered. The practical question raised by their objections was, whether these individual bondholders were so bound; and though the matters thus brought before the court by appellant on behalf of the individual bondholders did not, perhaps, take the ordinary and usual form of pleadings calculated to present issues, they did present substantial actual issues, upon the consideration of which the court must have predicated its judgment that the injunctional order should be entered. By what authority then, is the regularity of these proceedings now challenged? Appellant has not brought the injunctional order to this court on review or appeal, as he might have done; he has simply defied it. By what authority does he obtain a review as if, instead of defying, he had in the ordinary course of procedure appealed from it? True, as already stated, the record does not disclose a petition or other pleading formally asking them to show cause why the injunctional order should not be entered, and bringing them into court for that purpose; but being in court for any of the purposes of the case, I take it as fundamental that they were in court for all the purposes of the case; and that unless dismissed out of court, they are bound by every prohibition laid upon them, respecting the subject matter of the litigation that the court had power to lay upon them, unless, and until, it was set aside in the regular course of appeal. To hold otherwise would be to hold, as already stated, that one enjoined from doing a particular act—one not only notified of the injunction, but a party to the order in which the injunction is entered—can procure a review of the regularity of the proceedings in which it is entered by simply defying it.

The injunctional order entered is an unusual one. But the case in some respects is unusual. The practical consideration behind the court's determination of the status of the disputed property—whether it should be sold free and clear of the claim of the International Trust Company and those claiming under it, or not—was not merely that the parties might know what, in law, was the status of the disputed property. The practical consideration, behind that portion of the decree, was that the court might obtain the highest price that the property would command, by selling it, in fact, free and clear of such encumbrances. And to secure such a sale, to make good its assurance that the property would go to the purchaser free and clear of the claims adjudicated, the court had power, in my judgment, at any stage in its proceedings, by giving proper notice to the parties bound by the decree, to lay its mandate of prohibition against their doing anything that would defeat the decree. Indeed, to say now to the purchaser, that it was not a water plant, free and clear of all the claims litigated and determined that he was buying, but a water plant encumbered by a renewed lawsuit, that might be carried on in any of the courts of the country, seems to me to be flying in the face of the very con-

Digitized by Google

servative, but the very just and healthful, course taken in Julian v. Central Trust Company, supra.

The judgment of the Circuit Court is reversed, with direction to dismiss the petition and discharge the plaintiff in error.

(154 Fed. 304.)

ARKANSAS SOUTHEASTERN R. CO. v. UNION SAWMILL CO.

(Circuit Court of Appeals, Fifth Circuit. May 30, 1907.)

No. 1,625.

1. EQUITY—PARTIES—PERSONS WHOSE INTERESTS ARE DIRECTLY AFFECTED.

It is the aim of a court of equity to do complete justice by deciding upon and settling the rights of all persons directly interested in the subject of the suit, and to accomplish this end all persons materially interested in the subject ought generally to be parties to the suit.

[Ed. Note.—For cases in point, see Cent. Dig. vol. 19, Equity, §§ 246–250.]

2. SAME—INDISPENSABLE PARTIES.

A suit in equity against a corporation organized to build and operate a logging road for the sole purpose of carrying logs to the mill of a lumber company, and without which it could not operate its mill, to enjoin the construction of such road, the right to relief being based largely upon contracts between complainant and the lumber company and complainant and defendant, which were parts of the same transaction, is one in which the lumber company is directly and vitally interested and to which it is an indispensable party.

[Ed. Note.—For cases in point, see Cent. Dig. vol. 19, Equity, §§ 252–259.]

3. APPEAL—DISPOSITION OF CAUSE—APPEAL FROM INTERLOCUTORY ORDER.

Although an appeal is from an interlocutory order granting or continuing in force an injunction, if the appellate court is of opinion that relief cannot be granted and that on the final hearing the bill must be dismissed, it is its duty to save both parties the expense of further litigation by making a final disposition of the case.

[Ed. Note.—For cases in point, see Cent. Dig. vol. 3, Appeal and Error, § 3533.]

Appeal from the Circuit Court of the United States for the Western District of Louisiana.

This is a suit in equity brought by the Union Sawmill Company, an Arkansas corporation, against the Arkansas Southeastern Railroad Company, a Louisiana corporation. On the 16th of August, 1906, the Union Sawmill Company filed its petition in the Fourth judicial district court of the state of Louisiana against the Summit Lumber Company and the Arkansas Southeastern Railroad Company. The petition contained substantially the same averments and prayers contained in the bill in this case, which will be fully stated later. The only material difference in the suits is that in the state court the Summit Lumber Company is made a codefendant with the Arkansas Southeastern Railroad Company. The petition was presented to Hon. Robert B. Dawkins, judge of said state court, who granted the injunction prayed for. Later, on motion of the defendants in that suit, Judge Dawkins dissolved the injunction. The Union Sawmill Company, complainant in that suit, applied to Judge Dawkins for a suspensive appeal to the Supreme Court of Louisiana, which was refused. The Union Sawmill Company then made application to the Supreme Court of Louisiana for a mandamus to require Judge Dawkins to grant the

Digitized by Google

suspensive appeal. The application for mandamus was, on October 1, 1906, denied by Mr. Justice Monroe of the Louisiana Supreme Court, without the assignment of reasons. The Union Sawmill Company then applied to the Supreme Court for a rehearing. The application for a rehearing was denied, Mr. Justice Provosty delivering the opinion of the Louisiana Supreme Court. In re Union Sawmill Company, 117 La. 643, 42 South. 195. The case was dismissed from the Fourth judicial district court of Louisiana on December 3, 1906.

While the foregoing petition was pending in the state court, the Union Sawmill Company filed its bill in the United States Circuit Court for the Western District of Louisiana. In this suit the only defendant is the Arkansas Southeastern Railroad Company. The Summit Lumber Company, a corporation organized under the laws of Arkansas, is not made a party to this suit. It could not be made a party without defeating the jurisdiction of the Circuit Court, because it and the plaintiff corporation were both organized under the laws of the same state.

The following are the material averments of the bill:

"Your orator complains and says that it has its place of business in the county of Union and state of Arkansas, and that it owns and operates at the town of Huttig, in the said county, a large and valuable plant for the manufacture of lumber, and that it also owns valuable tracts of timber land in the county of Union, state of Arkansas, and also in the parish of Union, state of Louisiana, aggregating more than sixty thousand acres, of which it is the owner in fee simple, and that it is the owner of more than one hundred and eighty thousand acres, of which it is also in actual possession, but of which it owns only the timber rights, with limited time in which to cut and remove the same, and that the value of the said holdings in the parish of Union, in the state of Louisiana, alone aggregates more than nine hundred thousand dollars.

"And your orator further shows that the Arkansas Southeastern Railroad Company was organized on the face of its charter for the purpose of constructing a line of railroad from the village of Randolph, in the said parish of Union, in a southeasterly direction through the said parish, thence to the city of Monroe, in the parish of Ouachita, thence further to the Mississippi river; that the said Arkansas Southeastern Railroad Company has constructed, and is engaged in the construction of, a road along the line hereinbefore indicated, and across and beyond the west bank of the Little Loutre, in Union parish, Louisiana, but it avers that the said road, so far as constructed, is not permanent and substantial in its character, and was, and is being constructed, only for temporary use as a logging or turn road for the conveyance of timber to the mill of the said Summit Lumber Company, which is the northern terminus and point of origin of the said Arkansas Southeastern Railroad Company; that among and in addition to other large and valuable holdings of land in the parish of Union, in the state of Louisiana, your orator is and was, in March last, the owner and actual possessor, in good faith, of the following described real estate, to wit: [We omit description of land.]

"And that the said Arkansas Southeastern Railroad Company did, during the months of February and March, 1906, through its officers, agents, and employés, enter upon and commit repeated acts of trespass upon the same, by cutting and felling trees, constructing embankments for its logging road or railroad, and by running locomotive and cars over and across the said lands, all without any right or authority whatever from your orators, and in utter disregard of its repeated warnings and protests, and that the said defendant company, its agents, officers, and employés, continued to commit the aforesaid acts of trespass until restrained by an order of this honorable court rendered on or about March 15, 1906, at the instance of your orator, in the suit entitled, 'Union Saw Mill Company versus Arkansas Southeastern Railroad Company, Defendant, et al.'

"That the said defendant railroad company, through its agents, officers, and employés, did also, and about the same time, during the months of February and March, 1906, illegally and tortiously enter upon and take possession of a part of your orator's land in sections 27 and 34, township 23 north, range 1

Digitized by Google

west, in the said parish of Union, state of Louisiana, and would have so continued illegally and tortiously in its possession, and of other valuable holdings of your orator, but for the granting of the aforesaid restraining order of this honorable court on or about March 15, 1906; that at the time of the commission of the aforesaid illegal and tortious acts by the said Arkansas Southeastern Railroad Company on its property in Union parish, Louisiana, during the months of February and March last, the said defendant railroad company had instituted two actions in the Fourth district court for the parish of Union, state of Louisiana, for the purpose of expropriating portions of the aforesaid described land for a right of way, and that said actions were then, and on March 21, 1906, still pending and undecided, as well as the suit filed by your orator in this honorable court, and in which the restraining order hereinbefore referred to was granted, together with several suits instituted by your orator against the Summit Lumber Company and which were also pending in the Fourth district court.

"That it entered into a written contract, on or about March 21, 1906, with the Summit Lumber Company, whereby the differences involved in litigation and then pending in the county of Union, state of Arkansas, and in Union parish, Louisiana, and also in the federal court for the Western District of Louisiana, between the Summit Lumber Company and the Arkansas Southeastern Railroad Company and your orator, over conflicting rights and titles to lands and timber and rights of way, situated and located on said lands in said parish of Union and county of Union, should be settled and terminated by the dismissal of the suits then pending, and by the sale under full warranty of titles to your orator of all the lands and timber owned by the said Summit Lumber Company, its officers or stockholders—that is, of the merchantable pine timber ten inches in diameter and over at the stump, then owned or under contract by the said Summit Lumber Company, its officers or stockholders—and all rights of way, in the parish of Union in Louisiana, and the county of Union in Arkansas, the territory in Union parish, Louisiana, being described as follows: [Description omitted.]

"That your orator agreed and obligated itself to pay to the Summit Lumber Company the sum of three ($3) dollars per thousand feet, that is, for all merchantable pine timber ten inches and over in diameter at the stump, standing and growing on said lands according to the estimates (for which provision is made in said contract), and with the understanding that no timber contracted for, with the right to cut and remove, expiring in less than five years from the date of conveyance to your orator, excepting the timber on sixteen hundred and seventy-seven acres, known as the 'Andrews Tract,' in sections five, six, seven and eight, of township twenty-two, range one east, and section one township twenty-two, range one west and such other tracts of timber as the Summit Lumber Company shall or might have the time for cutting and removing prolonged to the period of time mentioned, and by or before June 30 1906, the time agreed on for conveying and settling under said contract, and at which price per thousand feet the said Summit Lumber Company obligated and bound itself to convey, sell, and deliver all of its lands and timber in the parish of Union, Louisiana, and the county of Union, Arkansas, excepting that within the aforesaid reserved territory, and as specified in contract, by full warranty deeds of June 30, 1906, and before which date your orator was to be furnished by the Summit Lumber Company with complete abstracts of title to all the lands and timber it proposed and agreed to convey under said contract, and the titles to which land and timber to be satisfactory to the attorney for your orator, otherwise the same should not be included in said conveyance.

"That, as a further inducement to your orator to make the aforesaid purchase of lands and timber at the price hereinbefore stipulated, it was agreed and stipulated that all the rights of way and privileges owned and enjoyed by the Summit Lumber Company and the Arkansas Southeastern Railroad Company on or over the lands whereon the timber is to be conveyed to your orator, and within the above-described territory, should also be conveyed to, and your orator fully subrogated to all the rights and privileges of the said lumber company and the said railroad company, and which said rail and

Digitized by Google

logging road, it was also further stipulated and agreed, should not be constructed nor extended further than the west bank of the Little Loutre, and should only remain for a sufficient length of time for the removal of the timber between said creeks, and, in any event, not longer than twelve months, when said logging railroad, tramroad, should be torn up and removed back to Big Loutre, and not to build or cause to be built another rail, logging, or tram road within said territory for the period of five years from the date of said contract, being March 21, 1906, and which agreement and obligation was fully and legally ratified and confirmed by the said Arkansas Southeastern Railroad Company.

"That it was also agreed and covenanted by and between the Summit Lumber Company and your orator that, as part payment of the purchase price for the lands and timber and rights of way to be conveyed to it by the former, and the Arkansas Southeastern Railroad Company, all of the merchantable pine timber measuring ten inches in diameter and above at the stump, standing and growing on the McCormick, Harrison, and Futch tracts, and within the territory reserved by the Summit Lumber Company, said timber amounting to more than one million and five hundred thousand (1,500,000) feet, and owned by your orator, should be conveyed to the said Summit Lumber Company at the price of three dollars ($3) per thousand feet, and the amount thereof credited against the final sum or amount to be paid under said contract by the Union Sawmill Company for the timber and rights of way aforesaid, and with the understanding that the said timber should be cut within six months from date of said contract, and which timber on said above-mentioned tracts has been hauled by the Arkansas Southeastern Railroad Company, and manufactured by the Summit Lumber Company under the contract, notwithstanding defendant's failure and refusal to perform the obligations it assumed and undertook thereunder.

"That upon the signing and execution of the aforesaid contract a copy thereof, together with a certified check drawn by your orator for the sum of fifty thousand ($50,000) dollars, was deposited with the Fourth National Bank of St. Louis, Missouri, to be held by the said bank, subject to the final completion and carrying out of the contract, when same should be paid to the Summit Lumber Company as part of the purchase price of the lands and timber and rights of way to be conveyed, as hereinabove set forth; and that your orator has in every particular fully performed its part of said contract so far as the same has been possible, and has made repeated demands upon the Summit Lumber Company and the Arkansas Southeastern Railroad Company to carry out and perform their obligations thereunder, but without avail; that said Summit Lumber Company caused abstracts to about one-half of the lands and timber situated in Union parish, and in the aforesaid territory, to be furnished to your orator and its attorney within the time provided, but for some unknown reason has failed and refused to furnish abstracts for the balance of said lands and timber covered by said contract, and that your orator is now having the titles to the remainder of the lands, timber, and rights of way belonging to the Summit Lumber Company and this defendant abstracted, and expects to have the same completed within the next thirty days, for the purpose of ascertaining the exact quantity thereof, in order that a legal tender of the balance of the purchase price, after crediting the price of the timber received by the Summit Lumber Company from your orator in part payment, may be made to the Summit Lumber Company in the manner prescribed by law, and a suit for the specific performance of said contract instituted against said defendant by your orator, and all of which it is impossible to do without first having said abstracts.

"That all of the timber embraced in said contract having been estimated in the manner therein provided, and the contract partially performed, your orator, acting and relying upon the good faith of the Arkansas Southeastern Railroad Company to carry out their contract, added another large sawmill to its manufacturing plant, at a cost largely exceeding one hundred thousand dollars, and which otherwise would not have been done, especially at this time, and, in addition, caused the dismissal of all suits pending by it against the Arkansas Southeastern Railroad Company and the Summit Lumber Company,

Digitized by Google

and now it is desirous of and entitled to a specific performance of the said contract by this defendant.

"That the said railroad company, through its officers, agents, and employés, has illegally and tortiously entered upon and taken possession of a part of the rights of way on the east side of the Little Loutre in Union parish, Louisiana, and which your orator, under said contract, is the equitable owner and possessor, and that it has constructed thereon a railroad, logging or tram road, a distance of about one-fourth of a mile, and that unless restrained that said company will continue the construction of the said railroad, logging or tram road, and will run locomotives and cars over the same for the purpose of transporting timber to the Summit Lumber Company, and over and through valuable property and timber lands owned and possessed by your orator. [Here we omit allegations as to the value of the property involved in the suit, which is shown to greatly exceed $2,000.]

"That said defendant is not entitled to exercise under the laws of the state of Louisiana the right of eminent domain, because not designed as a public carrier, and that your orator's property, over which said railroad, logging or tram road has been permitted to be constructed, in consequence of the contract entered into by this defendant with your orator, could not have been taken, and the said railroad, logging or tram road would not have been permitted to be constructed thereon, but for the entering into of the aforesaid contract, and the obligation expressed and undertaken by this defendant 'to tear up and remove, or cause to be torn up and removed, all its railroad lying and situate between the west side of the Little Loutre to the east side of the Big Loutre creek, in the parish of Union, Louisiana, within the period of twelve months from March 21, 1906 (being the date of the contract between Summit Lumber Company and your orator), or as much earlier as the Summit Lumber Company can cut and this defendant convey all the timber the former company owns within the last mentioned and described territory,' and that this defendant 'would not, nor any one by its procurement, either directly or indirectly, build any railroad or tramroad into the territory above mentioned and described,' and in which territory your orator purchased the pine timber and the rights of way enjoyed and belonging to the Summit Lumber Company and to the Arkansas Southeastern Railroad Company, within a period of five years from the 21st day of March, 1906.

"Wherefore, the premises considered, your orator prays that a writ of injunction may issue to the Arkansas Southeastern Railroad Company, its officers, agents, and employés, perpetually enjoining it and them from entering upon and committing further acts of trespass, such as cutting and felling of trees, constructing embankments for railroads, logging roads, or tramroads, running locomotives or cars, or from in any manner going beyond, with either its railroad, logging or tram road, the west bank of the Little Loutre creek, in Union parish, Louisiana, or from going upon any of the lands of your orator east of the Little Loutre and outside of or beyond the territory specially reserved by the defendant company in the contract hereinabove referred to and made a part thereof, and from in any manner disturbing your orator's possession and enjoyment of the rights of way east of the Little Loutre, outside of or beyond the aforesaid described and specially reserved territory to the defendant company; and that, if it should be held by this honorable court that the defendant company has unlawfully and tortiously entered upon and taken possession of any part of your orator's property as set forth in this bill, and particularly beyond the west bank of the Little Loutre creek, in Union parish, Louisiana, that said defendant company be ordered to vacate the same, and to remove any construction or obstructions illegally placed thereon; that a writ of subpœna may issue to the said Arkansas Southeastern Railroad Company requiring it to answer, not under oath, this bill of complaint and the various matters therein set forth, and that, forasmuch as the matter is urgent and does not admit of a notice of a motion for a preliminary injunction, a temporary restraining order may issue, enjoining the said defendant company, its officers, agents, and employés, from further trespassing upon your orator's property, or from constructing any embankment, railroads, or logging roads or tramroads, or from running its locomotives or cars beyond the west bank of the

Digitized by Google

Little Loutre creek, as specifically set forth herein, until the final hearing of this cause, or until such time as to your honors may seem meet.

"Your orator prays for such other and further orders and general relief as may seem proper in the premises."

It will be observed that the bill contains no reference to the suit in the state court. In the state court, Judge Dawkins dissolved the injunction on August 20, 1906, which he had theretofore granted. On September 8, 1906, 19 days after the state judge had dissolved the injunction in the state court case, the bill in this case was presented to one of the judges in the court below, who granted a temporary restraining order and set the application for injunction for hearing on the first Monday in October, 1906. The case came on to be further heard on November 3, 1906, on the application for injunction, and it was ordered by one of the judges of the Circuit Court that the injunction theretofore awarded "be continued until the hearing of this cause." The defendant, the Arkansas Southeastern Railroad Company, appealed from this interlocutory order. Act June 6, 1900, c. 803, 31 Stat. 660 [U. S. Comp. St. 1901, p. 551]. It is assigned, with many specifications of error, that the court below erred in continuing the injunction and in not dissolving it and dismissing the bill.

Two of the assignments of error are as follows:

(1) "It is manifest, from an inspection of defendant's plea and the exhibits thereto attached and made a part thereof, the authenticity and correctness of which are in nowise challenged, that the complainant, on the 16th day of August, 1906, voluntarily invoked the jurisdiction of the district court of the Fourth judicial district of the state of Louisiana, by filing its petition therein against the defendant and the Summit Lumber Company, praying for an injunction upon the identical grounds attempted to be presented by the complainant's bill herein; and that thereby said district court of said Fourth judicial district of the state of Louisiana had, prior to the 11th day of September, 1906, the date of the filing of the complainant's bill herein, acquired exclusive jurisdiction over the parties to and the subject-matter of the controversy attempted to be presented by the bill herein, and the court erred in awarding an injunction and in not dismissing said bill."

(2) "It is manifest, from an inspection of complainant's bill, that Summit Lumber Company is a necessary party, and that in its absence no final decree can be entered adjudicating the respective rights of the parties litigant, and the court erred in awarding a writ of injunction, in the absence of having said Summit Lumber Company a party to said cause."

Stubbs, Russell & Theus, J. W. Elder, and W. Hall Trigg (F. M. Etheridge, of counsel), for appellant.

E. H. Farrar and Lamkin, Millsaps & Dawkins, for appellee.

Before McCORMICK and SHELBY, Circuit Judges, and SAUNDERS, District Judge.

SHELBY, Circuit Judge, having made the foregoing statement of the case, delivered the opinion of the court.

The learned counsel for the appellant cites many authorities bearing on the question raised by the first assignment of error, but we have concluded that it is only necessary to consider and decide the question involved in the second assignment, which we have quoted in the statement.

The complainant—appellee in this court—the Union Sawmill Company, is an Arkansas corporation, owning large tracts of timber land in Union parish, La. The defendant—appellant in this court—the Arkansas Southeastern Railroad Company, is a Louisiana corporation, chartered to construct a railroad through Union parish, Louisiana. The beginning or northern terminus of the railroad was at the mill

Digitized by Google

of the Summit Lumber Company, a corporation organized under the laws of Arkansas, but having its principal place of business in Union parish, La. The railroad of the defendant was a logging road constructed and operated to serve the Summit Lumber Company. There was litigation between the complainant and the defendant and the Summit Lumber Company. This litigation was compromised or agreed to be settled by agreements between the three corporations. Two agreements were made, which are described in the bill. As they are described in the bill, which we have set out in the statement, the two agreements constitute one transaction by which the pending litigation between the three corporations was intended to be settled. This settlement was to be effected by the dismissal of the litigation between them, and by the purchase by the complainant of certain lands and timber and rights of way in which the defendant and the Summit Lumber Company were both interested. The bill avers performance on the part of the complainant, and alleges that it has "made repeated demands upon the Summit Lumber Company and the Arkansas Southeastern Railroad Company to carry out and perform their obligations thereunder, but without avail." It is alleged that the complainant has deposited its certified check for $50,000 with the Fourth National Bank of St. Louis, Mo., to be held by that bank and paid to the Summit Lumber Company as a part of the purchase price of the lands and timber and rights of way embraced in the contracts. It clearly appears that the Summit Lumber Company has a larger interest in the subject-matter of the contracts than the defendant railroad company.

The connection and interest of the Summit Lumber Company with the controversies between the complainant and the defendant is apparent in every material paragraph of the bill. It was interested in the suits dismissed, in the rights of way and property agreed to be sold; it is to receive the purchase money; the railroad, the construction and operation of which are sought to be enjoined, begins at its mill and is operated to convey timber to its mill, and it has no other means of being furnished with timber. It is expressly alleged in the bill that the railroad "is being constructed only for temporary use as a logging or turn (tram) road for the conveyance of timber to the mill of the said Summit Lumber Company, which is the northern terminus and point of origin of the said Arkansas Southeastern Railroad Company." Again it is alleged:

> "That, unless restrained, the said company will continue the construction of the said railroad or logging or tram road, and will run locomotives and cars over the same for the purpose of transporting timber to the Summit Lumber Company."

One main purpose of the bill is to enjoin the railroad company from serving the Summit Lumber Company. If the Union Sawmill Company gets the relief prayed for, it would put the Summit Lumber Company out of business and close its mills. That was the aim of the suit in the state court, and is the chief purpose of the injunctive feature of the bill here. It is clear to us that a decree affecting the rights of the Summit Lumber Company so vitally ought not to be rendered without giving that company an opportunity to defend.

Digitized by Google

The aim of a court of equity is to do complete justice by deciding upon and settling the rights of all persons directly interested in the subject of the suit, so as to make the performance of the order of the court safe to those who are required to obey it, and to prevent future litigation. To accomplish this end, all persons materially interested in the subject ought generally to be parties to the suit. There is a class of persons who are not only termed necessary parties, but who are indispensable parties, to wit, persons who not only have an interest in the controversy, but an interest of such a nature that a final decree cannot be made without either affecting that interest or leaving the controversy in such a condition that its final termination may be wholly inconsistent with equity and good conscience. California v. Southern Pacific Co., 157 U. S. 229, 250, 15 Sup. Ct. 591, 39 L. Ed. 683; Gregory v. Stetson, 133 U. S. 579, 10 Sup. Ct. 422, 33 L. Ed. 792; Minnesota v. Northern Securities Co., 184 U. S. 199, 22 Sup. Ct. 308, 46 L. Ed. 499. We think that the application of this rule shows that the Summit Lumber Company is a necessary party to this suit.

Although the appeal is taken from an interlocutory order continuing in force an injunction, if the court is of opinion that relief cannot be granted, and that on the final hearing the bill must be dismissed, it is the duty of the court to save both parties the expense of further litigation by making a final disposition of the case. Smith v. Vulcan Iron Works, 165 U. S. 518, 17 Sup. Ct. 407, 41 L. Ed. 810.

The Summit Lumber Company and the complainant both being corporations created under the laws of the same state, and, for the purposes of jurisdiction, citizens of the same state, the jurisdiction of the Circuit Court will be defeated when it is made a party; and yet its interest in the case is such that the relief called for by the bill cannot be granted without having it before the court as a party.

It follows that the decree continuing the injunction must be reversed, and the cause remanded, with directions to dismiss the bill (Cabaniss v. Reno Min. Co., 116 Fed. 318, 323, 54 C. C. A. 190), and it is so ordered.

(154 Fed. 311.)

PALMER v. BRADLEY et al

(Circuit Court of Appeals, Seventh Circuit. April 16, 1907.)

No. 1,324.

1. WILLS—CONTEST—TIME—STATUTES.

Where a foreign will, devising both real and personal property in Illinois, was admitted to probate, one of the heirs of testator's estate was entitled to contest the same in the manner and within the time specified by the Illinois wills act (Hurd's Rev. St. 1905, c. 148, § 7), regulating will contests, though it was only claimed that the will was void, in so far as it attempted to pass personal property, because of a failure to execute it in a manner prescribed by the laws of testatrix's domicile at the time it was executed, so that, no contest having been made within such time, the decree admitting the will to probate was a conclusive adjudication of its validity.

2. COURTS—FEDERAL COURTS—JURISDICTION—WILL CONTEST.

While federal courts sitting as courts of chancery may entertain bills to set aside wills, such courts nevertheless observe the public policy of the

Digitized by Google

state where the property to be recovered is situated and the court sits respecting the time within which such suits shall be brought.

[Ed. Note.—For cases in point, see Cent. Dig. vol. 13, Courts, § 983.]

Appeal from the Circuit Court of the United States for the Eastern Division of the Northern District of Illinois.

For opinion below, see 142 Fed. 193.

The appeal is from a decree, dismissing for want of equity a bill brought by appellant as heir at law of his mother, Anna M. Benedict, against appellee personally, and as executor and trustee under the will of Mrs. Benedict. The facts are stated in the opinion.

F. S. Winston, John Barton Payne, Silas H. Strawn, and John J. Lordan, for appellant.

John P. Wilson, John J. Herrick, and William B. McIlvine, for appellee.

Before GROSSCUP, BAKER, and SEAMAN, Circuit Judges.

GROSSCUP, Circuit Judge, delivered the opinion:

The will was executed by Mrs. Benedict in France on the 29th day of March, 1895, and was admitted to probate in the Probate Court of Cook County, March 26th, 1896—purporting to dispose of real estate situated in Cook County, Illinois, of the value of about seventy-five thousand dollars, and of personal property, consisting of bonds, mortgages, and the like, in possession of appellee in Cook County, of the value of about half a million dollars.

The bill filed December 3rd, 1902, together with the amended bill filed August 4th, 1904, is to require the appellee to account to appellant for the personal property thus coming into his hands under the will.

The basis of the bill is, that though executed in conformity with the laws of Illinois, where both the personal property and the real estate was situated, the will is effective only as to the real estate, because of the fact that it did not conform to the law of France, respecting the execution of wills—the testatrix at the time of the execution of the will being, according to the averments of the bill, domiciled in France—and is therefore ineffective as to personal property.

To the bill appellee pleaded substantially as follows: (1) That on notice to appellant the will had been duly admitted to probate by order of the Probate Court; whereby, as between appellant and appellee, it was adjudicated, either that the testatrix, at the time the will was made, was in fact domiciled in Illinois; or, if domiciled in France, that the will was in fact executed in accordance with the laws of France; (2) That the estate has been administered and distributed through the Probate Court, running through a period from the 26th day of March, 1896, until the 12th day of June, 1902; no contest on the ground herein named having been instituted; whereby appellant is estopped from asking for the relief prayed for in the bill; and (3) The five years statute of limitations; which pleas having been sustained as being good and sufficient in law, and appellant standing by his bill, the bill was dismissed.

We do not think it necessary to go into these pleas in detail. Taken as a whole, the first two pleas set up a state of facts that bars this suit. It is well settled in Illinois, that a judgment of the Probate

Digitized by Google

Court admitting a will to probate is a final and conclusive adjudication of the validity of the will, as to all questions relating to its validity as a testamentary instrument, until set aside by a direct proceeding brought in the manner, and within the time, provided by the law of Illinois. Chicago Title & Trust Company v. Brown, 183 Ill. 42, 55 N. E. 632, 47 L. R. A. 798. No appeal was taken from the judgment probating the will, and no proceeding was brought to contest its validity upon the ground taken in this bill, within the time fixed by the statute. This attempt, therefore, to invalidate the will, so far as it relates to personal property, is barred by the lapse of time, unless it can be successfully maintained that the right that appellant is attempting now to exercise, and the remedy he is invoking, were not within the remedial proceeding afforded him by the seventh section of the Illinois statute of wills (Hurd's Rev. St. 1905, p. 2051, c. 148), wherein it is provided, that unless contested within one year, the will as probated, is forever binding and conclusive on all of the parties concerned.

That an heir may contest the will under this provision of the statute, not only on account of the incapacity or duress of the testator or testatrix, but also because the will is not executed, in matter of formality, in conformity to the law of the place where executed, is not denied by counsel for appellant. The insistence of counsel in that respect is, that because the will is not wholly invalid (is valid as to the real estate disposed of), there can be no challenge under that provision, of its validity as to personal property—that so far as this provision for contest goes the will must stand wholly, or fall wholly.

We cannot concur in this view. The seventh section of the Illinois statute of wills, taken in connection with all the provisions of the Illinois law relating to the probate of wills, is a statute of repose. It embodies the public policy of Illinois that the ownership of property derived through wills shall not be held in uncertainty for a longer period than the one indicated, and such further period as is necessary to determine contests already pending. The question that appellant had to decide for himself, when the will was probated, was not whether the personal property was or was not subject to the testatrix's right of disposal; admittedly the testatrix had a right to dispose of her personal property. The sole question that appellant had to decide was: Is the will, to the extent that it disposes of personal property, valid or invalid by reason of the fact that the testatrix did not comply with the formalities of the law of France respecting the execution of wills. And there is no reason apparent to us, why this question relating, as it does, solely to the validity of the will as a testamentary instrument, to the extent that it purports to dispose of a part of the property involved, may not be raised by the statutory contest provided for; for a contest, like the one now before us, is in the nature of a bill in equity, carrying, in our judgment, the scope and the susceptibility of being adjusted to any given conditions that a bill in equity may embody. To hold otherwise, it seems to us, would be to sacrifice substance to form—to nullify this statute of repose by confining it within limitations founded on the sheerest kind of technical considerations.

Digitized by Google

That a contest under the seventh section of the statute of wills is not one in which the will must wholly stand or wholly fall, is decided we think in Wolf v. Bollinger, 62 Ill. 368—the case of a testator, who after the publication of his will, desiring that a tract of land devised therein to B, should go to A, drew a line through B's name, interlining over the same the name of A, but never caused the will thus altered to be republished or attested by witnesses as the law provides. Having been admitted to probate, the will was contested under the provision of the statute, as it then stood, corresponding to section seven of the statute of wills as it now stands, the question being whether the will as altered was effective as devising the tract to A; and (should that be held in the negative) was the will effective as devising the tract to B, notwithstanding the alteration. And on the power of the court under that character of statutory contest to settle these questions and carry out its judgment, notwithstanding the fact that such proceeding would require not only that the validity of the will should be enquired into, but that the true nature of the instrument should be established, the court said:

"But it is insisted that, at most, the court had no further authority than to determine whether the instrument, as probated, was the will of the testator or not, and that it had no power to establish the instrument, as originally drawn and executed, without alteration as the true will.

"It is certainly an old head of chancery jurisdiction to establish the validity of wills. Story's Eq. Ju. 1443 et seq., and notes; Adam's Eq. 535.

"The true contest was, as to which one of two persons was the devisee under the will; and it would fall short of administering a full measure of relief to declare that the one was not, and leave it undetermined, to be adjudged in a further suit, may be, whether the other was a devisee. Both parties being before the court, it best consists with convenience and the rule of chancery practice, that the entire question as to their opposing claims to the devise of the land, should, as between themselves, be put to rest, and that it should be settled which one of them was the devisee."

And in a subsequent case, Hesterberg v. Clark, 166 Ill. 241, 46 N. E. 734, 57 Am. St. Rep. 135, a like ruling was made.

The truth is, that the bill now before us is in substance, whatever may be its form, a direct attack upon the validity of the will—is based on the fact that while appellee claims the personal property under the will, appellant contests that claim because of the invalidity of the will; so that unless this statutory provision for contest was intended to be limited merely to the inquiry of the testator's incapacity or duress, the contest here presented is clearly within the kind of contests that the legislature had in mind when the statute of wills was enacted. Indeed in many states it has been expressly adjudicated, that upon the presentation of questions of this character to the Probate Court, the judgment might be one of limited or partial probate—a doctrine recognized in Wolf v. Bollinger, and Hesterberg v. Clark, supra; from which it would logically follow that the proceedings on review, either by appeal or by statutory contest in the nature of a bill of equity, should be equally plastic in the framing of a decree suitable to the circumstances presented.

Now if this be the measure of appellant's right, were the bill before us being considered in state courts of Illinois, there can be no

Digitized by Google

enlargement of that right by reason of the fact that he has invoked the jurisdiction of the United States Courts. True, federal courts sitting as courts of chancery, may entertain bills to set aside wills or to declare wills invalid; and the same having been done in proper cases, to administer estates according to the law of the land. But in such suits, the federal courts, just as much as the state courts, must observe the public policy of the state where the property to be recovered is situated, and the court sits, respecting the time within which such suits shall be brought—the statutes of repose that prevail in the state where the property is situated and the suit is brought; for this is not primarily and substantially, so much a case to enforce French law in Illinois, as it is a case to recover Illinois property on the ground that by the law of Illinois, the will, so far as it related to personal property, was invalid, because it did not conform to the French law respecting its execution; and a party who thus comes into a United States court, within the state of Illinois, for the purpose of thus enforcing the Illinois law, must conform himself to the procedure respecting time limits that the Illinois law imposes.

The judgment of the Circuit Court is

Affirmed.

(154 Fed. 315.)

NEW YORK & CUBA MAIL S. S. CO. v. ROYAL EXCHANGE ASSUR.

(Circuit Court of Appeals, Second Circuit. April 30, 1907.)

No. 186.

1. INSURANCE—MARINE POLICY—CONSTRUCTION—FREIGHT.

A marine policy, insuring freight on board, or not on board, valued at £2,062, or actual freight, if more, "full interest admitted, the policy being deemed sufficient proof of interest," should be construed to cover the freight at risk at the valuation specified, though the freight actually at risk was much less in value.

2. SAME—ACTUAL FREIGHT—PERCENTAGE.

Where a marine policy insured freight on board, or not on board, valued at a specified sum, or actual freight, if more, full interest admitted, and of the actual freight insured lost the whole, except a small salvage, there having been no abandonment, the percentage of actual freight lost should have been applied to the value in the policy.

[Ed. Note.—For cases in point, see Cent. Dig. vol. 28, Insurance, § 1250.]

Appeal from the District Court of the United States for the Southern District of New York.

For opinion below, see 145 Fed. 713.

Harrington Putnam and Wing, Putnam & Burlingham, for appellant.

Frederick M. Brown and Butler, Notman & Mynderse, for appellee.

Before WALLACE, LACOMBE, and COXE, Circuit Judges.

WALLACE, Circuit Judge. This is an appeal by the libelant from a decree in an action brought to enforce a policy of marine insurance, and the appeal presents the question of the amount of the recovery to which the libelant is entitled under the policy. The libelant was the

Digitized by Google

owner of the steamship Vigilancia, a steamship employed in carrying general cargo and passengers between New York, Cuba, and Mexican ports; and October 15, 1900, effected insurance with the respondent by the policy in suit against loss of the steamship's freight by perils of the seas for the period of 12 months. The subject of insurance was recited in the policy as follows: "Being on freight on board, or not on board, valued at £2,062, or actual freight, if more." A printed slip was annexed to the policy reading "full interest admitted, the policy being deemed sufficient proof of interest," with permission to the insured to detach it should the policy have to be produced in a court of law. During the life of this policy, and while on a voyage from Vera Cruz to New York, via Progreso and Havana, carrying general and other cargo on freight, the Vigilancia stranded on Colorado Reef, to the westward of Havana, on January 14, 1901. A part of the cargo was destroyed by stranding, and other portions were sacrificed by jettison. The steamship remained aground for nearly five months, being floated on June 2, 1901. By these perils she was prevented from earning her pending freight. The salvors brought her to New York, where she was sold; but her damages were so great as to make her a total loss. She was not repaired until May 20, 1902.

When the Vigilancia left Vera Cruz bound for New York, her freight was partly collectible at New York, and had been partly prepaid. The total prepaid freight was $3,467.41, made up of $1,173 for carrying cattle and $2,094.41 for general merchandise. As to both classes of freight, it was provided by the shipping agreements that the prepaid freight should not be refunded or returned. The other freight moneys collectible at New York, amounted to $3,421.02. Of this amount only $948.49 was ever collected, and that was collected at an expense which left a net return of only $38.02. Cargo had been engaged at Havana by the libelant for transportation by its line from Havana to New York, and which the libelant intended to ship by the Vigilancia; and, if this cargo had been shipped by the Vigilancia, the freight that would have been earned thereby would have been $3,000. Being unable to send this cargo by the Vigilancia, the libelant sent it by one of the other vessels of its line, and received the freight therefor.

The court below decreed for the libelant for the sum of $4,907.04, allowing a recovery only for the proportion which the lost freight bore to the policy valuation, and not including in the lost freight the freight on the cargo engaged at Havana.

The policy in suit belongs to a class which are now frequently made whereby freight is insured by a valued time policy, and which the parties intend to be in force during the whole period, irrespective of the ship's actual freight engagements. They are made to cover losses the amount of which cannot be forecast with approximate accuracy, and in order to protect the shipowner to the extent of his probable or possible loss by the interruption of the engagements of his vessel at any time during the period agreed upon. It is quite legitimate for the parties to make a contract for an insurance which they estimate to be the fair average value of the freight at risk at all times during the life of the policy; and, having made it, they are held to it, whether it proves to have been larger or smaller than the value

Digitized by Google

which actually happened to be at risk at the time of the loss. An insurance on expected freight, which may or may not be that of a full loading of the vessel, attaches whenever some cargo has been shipped and some freight is at risk; and the valuation attaches upon that freight, and fixes finally the estimated value of the freight at risk in the event of a total loss. The whole sum of the valuation is to be treated as the value of the freight at risk, notwithstanding the freight actually at risk proves to have been much less in value. "The difference in effect between a valued and an open policy is that under an open policy in case of loss the assured must prove the actual value of the subject of insurance; in a valued policy he need never do so, the valuation in the policy being conclusive between the parties." Arnould, Insurance, § 339.

In all valued policies, the valuation refers to the value in the event of the total loss of the subject insured, and its effect is, if the loss is total, to make the underwriter liable for the sum valued, if the insurance is equal to that sum; and, if the loss is not total, to make the underwriter liable in the proportion borne by the partial loss to the total loss. It is sometimes said of policies insuring freight that the valuation may be opened when it appears that but an inconsiderable amount of freight was actually at risk. What is meant by this is well pointed out by Gorrel Barnes, J., in The Main, L. R. (Prob. 1894) 324. Referring to Forbes v. Aspinall, 13 East, 323, where the subject was considered, he said:

> That decision was "only an authority for a well-known proposition, viz.: That where both parties contemplated the freight insured to be on a full and complete cargo, and when in fact part only of the cargo is shipped, the freight upon the part cargo is only at risk, so that there must be what is called an opening of the valuation. In strictness, it is not an opening of the valuation, but is merely a reduction in proportion to the cargo shipped; the valuation still being held binding as a valuation on that portion which is shipped."

Where by mistake or design the amount of freight actually at risk is shown to have been much less than was contemplated by the parties to the policy, different considerations arise which need not be adverted to in view of the facts in the present case.

It was competent for the parties to agree that the valuation should stand for the value of the freight upon all the cargo on board the steamer at the happening of the loss, whether prepaid or not; or for the value of all the freight at the insurer's risk at the happening of the loss. The important question in the case is whether the one or the other of these valuations is applicable; in other words: What was the subject of insurance? And that question depends upon the intention of the parties as evidenced by the language of the policy. In voyage policies it is often possible to ascertain the intention of the parties from the extrinsic facts connected with the contract of insurance; as where the charter party is produced, and its terms in respect to freight are known to the underwriter when the policy is issued, and are supposed to be within the contemplation of the parties. As is pointed out by Mr. Justice Blackburn, in Allison v. Bristol Marine Insurance Co., 1 App. Cas. 209, 231:

Digitized by Google

"The presumption is, when freight is insured, that the charter party was disclosed to the underwriter."

In Williams v. North China Insurance Co., L. R. I. C. P. Div. 757, in considering the question what was insured under the words "estimated freight," in the policy, Jessel, M. R., said:

"Was it meant that the total freight, including advances, should be insured, or only so much of the freight as remained unpaid, or due, or to become due, to the shipowner? It is really a question of fact. The words of the policy may mean either. They may cover the portion of the freight paid in advance or not. To ascertain whether they do, we must look at the evidence."

Pollock, B., said:

"I think we may look at all the circumstances to see what was the subject-matter of the insurance, and I think they show that the subject-matter was the gross freight."

In time policies like the present there are usually few extrinsic facts of value to throw any light upon the meaning of the language in the policy in respect to the subject of the insurance. In the present case there are none. The policy insures "freight on board, or not on board." These words may mean the gross freight, or they may mean the freight at risk. The appellee insists, in substance, that they are intended to describe the freight on the whole cargo of the vessel, whether prepaid or not, at the time of the happening of the loss, and consequently that the valuation must be taken as applying accordingly. If this is true, there was no loss as regards the prepaid freight, and the amount is to be disallowed in estimating the amount of the partial loss. The appellant insists that these words are not intended to include prepaid freight, but describe all the freight at risk at the happening of the loss, including such as might accrue for cargo engaged, but not actually loaded.

In considering this question two considerations are pertinent, and these are both referred to in Allison v. Bristol Marine Ins. Co., supra, decided by the House of Lords. Lord Hetherley used this language:

"It is to be held in all cases that that in respect to which the insurance is made is that which is capable of being a subject-matter of insurance, viz., that which is at risk; and that, in regarding the contract of insurance, we must not assume, and we cannot in any way consistently with the law assume, that the insured is endeavoring to effect a policy upon that which is at no risk whatever. Next, when we come to look at the contract itself, it being a contract of freight, we have to remember that for a very long time it has been settled in our maritime law that prepaid freight cannot be recovered. I think, when we consider these two points, we shall be led very easily and safely to the solution of the difficulty which appears to have arisen in the case before us."

In Oriental S. S. Co. v. Tylor (1893) 22 Q. B. 515, Lord Esher said:

"From the moment when it becomes payable, advance freight cannot be insured by the shipowner. The freight, according to the contract, is then due to him by virtue of the contract at that time and at that moment. That does not depend upon whether the ship arrives or not. It is payable at that moment. It is money payable on contract, and on contract not depending upon any vicissitudes of his voyage at all."

We think these considerations are controlling in the present case, and that the terms "freight on board, or not on board" are not in-

Digitized by Google

tended to include prepaid freight. We cannot for a moment suppose that the parties intended to insure property in which the libelant would have no interest. We think they intended as the valued subject of insurance the freight at the libelant's risk, and not the gross freight, in which the libelant might have only a fractional interest. The words "on board, or not on board," have no material bearing upon the point. They are intended to cover such freight as may accrue upon the cargo actually or constructively in the custody of the vessel, although the cargo has not actually been laden upon the vessel. Tonge v. Watts, 2 Strange, 1251; Forbes v. Aspinall, supra; Adams v. Pennsylvania Ins. Co., 1 Rawle (Pa.) 97; De Longuemere v. Phœnix Ins. Co., 10 Johns. (N. Y.) 127; Same v. New York Ins. Co., Id. 201; Minturn v. Warren Ins. Co., 84 Mass. 86.

In reaching this conclusion we have not overlooked the language of some of the clauses of the policy which have been adverted to by counsel. The policy is obviously a blank form adapted for insurance of a vessel and of her cargo, and many of the clauses are applicable to either the vessel or the cargo, and are of no assistance in ascertaining the intention of the parties in respect to the insurance of freight. The parties agreed upon an insurance, which to the extent of the valuation should be a continuing indemnity during the life of the policy, regardless of the accidental conditions of the particular voyage, and meant that, if less freight than the valued sum happened to be at risk at the time of the loss, the valuation should nevertheless stand, and the loss be estimated accordingly, subject, of course, to the underwriter's right to any salvage which might be realized. When such an agreement is made, not as a wager, but in good faith, the underwriter having based his premium upon such an understanding, there is no reason why it should not be enforced, notwithstanding it turns out that the actual loss of the insurer is considerably less than the sum agreed upon.

The policy does not insure the earning capacity of the vessel during the term of the policy; but the subject of insurance is the freight which may exist and be at the risk of the libelant at the happening of the loss. If the Havana cargo had been engaged specifically for the Vigilancia, we do not doubt that the loss of freight on that cargo would constitute a part of the loss. Where the owner of a vessel has entered into a definite contract with the owner of goods that they shall be transported by his vessel, and the goods are at the port of shipment and ready to be put on board the vessel upon her arrival upon a particular voyage, the former has an insurable interest in the freight of the goods, and under a policy like this the freight would be at risk. Adam v. Warren Ins. Co., 22 Pick. (Mass.) 163; Robinson v. Manufacturers' Ins. Co., 1 Metc. (Mass.) 143; Adams v. Pennsylvania Ins. Co., 1 Rawle (Pa.) 97. Upon the facts in this case, however, the libelant, although it had an insurable interest in these freights, had not, so far as appears, by any overt act appropriated any part of the cargoes engaged to any particular vessel for transportation; nor does it appear that any cargo was actually at Havana awaiting transportation when the loss occurred. All this, however, makes but a trivial difference in the amount of the recovery which should be awarded.

Digitized by Google

Giving due effect to the policy, the freight at risk was actually $3,421.02, but was of the agreed value of $10,034.72. Of the actual freight the libelant lost the whole, except the salvage of $38.02.

As there does not appear to have been an abandonment the percentage of actual freight lost should be applied to the value in the policy, which will make a recovery of $9,923.19. A decree should have been rendered for this sum with interest. This amount is so largely in excess of the actual loss that we have industriously tried to reach a different interpretation of the policy, but have been unable to do so, and the appellee must be held to the consequences of the contract which it saw fit to make.

The decree is reversed with costs, and with instructions to the court below to enter a decree conformably with this opinion.

(154 Fed. 320.)

In re BEAVER KNITTING MILLS.

(Circuit Court of Appeals, Second Circuit. April 30, 1907.)

No. 263.

1. CORPORATION—ASSUMPTION OF MORTGAGE ON PROPERTY PURCHASED—CONSTRUCTION OF RESOLUTION.

A resolution passed by the board of directors of a corporation on April 6, 1901, authorizing and directing the president to execute on behalf of the company "an agreement * * * dated April 5, 1901, regarding extension of time of payment of second mortgage of $6,000," *held* to refer to and to authorize the execution of a particular written agreement which was dated April 5th, and to make a provision of such agreement by which it assumed payment of the mortgage binding upon the company, the mortgage having been given by a prior owner upon property which he subsequently conveyed to the company.

2. SAME—POWERS OF DIRECTORS.

No action of the stockholders is necessary to authorize or ratify an agreement by the directors of a corporation to assume a mortgage on property purchased by the corporation as a part payment of the purchase price.

3. BANKRUPTCY—LIENS—PART PAYMENT OF DEBT BY SURETY.

A corporation, on a purchase of property, as part payment of the purchase price assumed payment of a debt secured by mortgage on the property, and which was also secured by a mortgage on other property of the original debtor. The latter mortgage was foreclosed, the property sold, and the proceeds, which was less than the debt, paid to the creditor. The corporation was adjudged a bankrupt, and its property sold clear of liens which were transferred to the proceeds. *Held* that, by its assumption of the mortgage debt, the corporation became the principal debtor and the original debtor its surety, and the creditor was entitled to prove his claim and enforce his lien for the full amount of the debt, without deducting the amount of the proceeds of the other mortgaged property, which on receiving payment in full from the bankrupt's estate he held in trust for the original debtor.

Appeal from the District Court of the United States for the Southern District of New York.

In Bankruptcy. On review of order of referee in re claim of David H. Burrell.

Upon the sale by the trustee herein of certain property of the bankrupt, upon which there were liens by way of mortgage, an order was made that

Digitized by Google

the sale be made free from liens and that the liens attach to the proceeds. A sale was had and the trustee is in possession of the proceeds subject to the liens. David H. Burrell claims that the proceeds, after the payment of the first mortgage lien, be applied to the lien held by him of a second mortgage against said premises and chattel mortgages against personal property, and that the whole of his claim be paid out of such proceeds. The trustee claims that as there has been a payment made on account of another mortgage made by the same person who made this mortgage, and for the same debt, that such amount, namely, $1,816.98, should be credited upon his claim against the moneys in the hands of the trustee. On May 15, 1901, John Macaulay and wife executed and delivered their note to David H. Burrell, promising to pay within 30 days from its date $6,000, with interest. As security, they gave two mortgages, one dated May 15, 1901, and acknowledged that day upon property in Saratoga county N. Y., and another mortgage dated May 16th, and executed and acknowledged that day on the property in Columbia county, N. Y., which latter property has been sold by the trustee, who now holds the balance of proceeds arising on such sale. On March 1, 1901, subsequent to the making of this loan and these mortgages, Macaulay deeded the property at Hudson, Columbia county, to the Beaver Knitting Mills, in which deed there is no mention of any mortgage, which corporation, through its officers, entered into an agreement, dated April 5, 1901, with Burrell, the mortgagee, as follows: "1. Said Beaver Knitting Mills covenants to pay said mortgage of $6,000, with interest at 6% from May 16, 1900." And Burrell agreed to extend the payment of the mortgage for five years. The referee required the claimant to deduct from the face of his claim the sum of $1,816.98, the proceeds of the other mortgage received by him.

The following is the opinion of Holt, District Judge in the lower court:

"I am unable to concur with the opinion of the referee in holding that there was no valid agreement by the bankrupt to assume the mortgage. He says the agreement was to extend, not to assume, the mortgage. The resolution adopted at the meeting of the board of directors on April 6, 1901, provided that the president of the company was 'authorized and directed to execute on behalf of this company, in duplicate, an agreement with David H. Burrell, of Little Falls, N. Y., dated April 5, 1901, regarding extension of time of payment of second mortgage of $6,000.' This, it seems to me, was authority to execute the written contract, dated April 5, 1901, whatever it contained. It is not simply authority to execute a contract regarding the extension of the time of payment. That expression is simply briefly descriptive of the contract. Moreover, at the same meeting resolutions were passed directing payment of interest on this mortgage. The extension of the time of payment would have been sufficient consideration for the assumption; and, besides, it was a part of the original arrangement for the organization of the corporation and sale of the property that the mortgages on it should be assumed. It is said that no stockholders' meeting was called to assent to the assumption of the mortgage. All the stock substantially was held by the Macaulay family, and a meeting of the directors was substantially a meeting of the stockholders, but I do not think that the assent of stockholders is necessary to the assumption of a mortgage upon the purchase of property. The assumption of a mortgage is a method of part payment for property. I think that the action of the directors upon that question is sufficient. Moreover, I cannot see why the whole transaction was not subsequently ratified by the resolution of ratification entered in the minutes in July. I think, therefore, that the bankrupt assumed the note and mortgage. That being so, it became primarily liable for the payment of the debt. The bankrupt, therefore, was the principal debtor to Burrell. Burrell held, as collateral to the note, a mortgage on the bankrupt's mill, and another mortgage on the Saratoga property. The Saratoga mortgage was foreclosed, and the proceeds, about $1,800, paid to Burrell. Thereafter the bankrupt's property was sold under a stipulation that it be sold free of Burrell's mortgage, his rights to attach to the proceeds.

Digitized by Google

Under these circumstances Burrell filed a proof against the bankrupt's estate for $6,000, his entire debt, and the referee has compelled him to credit on it the $1,800 received by Burrell on the foreclosure of the Saratoga mortgage. The referee in his opinion refers to the case of Breed v. Bank, 57 App. Div. 475, 68 N. Y. Supp. 68, and other cases holding that when one creditor has a lien on two funds, and another creditor on one of these funds only, equity will compel the creditor having the lien on the two funds to enforce his lien, so far as it goes, against the fund which the other creditor has no lien on. I cannot see that that principle applies to this case. If some other creditor of the bankrupt had had a lien on either the Saratoga property or the mill, he could have insisted that Burrell should enforce his lien first against the property on which the other creditor had no lien; but that is not this case. The question here is whether Burrell, having enforced his collateral, is to be precluded from proving his claim in full against the principal debtor. The bankrupt owes this debt. If it paid it in full, Burrell would then receive the $6,000 due on the note and the $1,800 derived from the Saratoga foreclosure, and he would hold the surplus over the amount of his debt as trustee for Macaulay. But there is nothing unjust in this. Macaulay is not in bankruptcy. The Beaver Knitting Mills, having assumed the debt, was primarily bound to pay it, and Macaulay, as bondsman in the Saratoga mortgage, was a surety merely. If the bankrupt paid the debt, Macaulay would be entitled to be reimbursed. If Burrell had not filed any proof, Macaulay could have done so in his name. Bankr. Act July 1, 1898, c. 541, § 571, 30 Stat. 560 [U. S. Comp. St. 1901, p. 3443]. He could not prove in his own name, although, as surety, he had paid part of the debt. He would have proved for the whole claim of Burrell, and, if it had been paid in full, Burrell would have held the surplus as trustee for Macaulay. See, generally, Re Heyman, 95 Fed. 800, 2 Am. Bankr. Rep. 651; Madison Square Bank v. Pierce, 137 N. Y. 444, 33 N. E. 557, 20 L. R. A. 335, 33 Am. St. Rep. 751; People v. Remington, 121 N. Y. 329, 24 N. E. 793, 8 L. R. A. 458.

"My conclusion is that the referee's order should be reversed and Burrell's proof allowed to stand as originally filed."

Schuyler C. Carlton, for appellant.

A. M. Mills, for respondent.

Before WALLACE, LACOMBE, and TOWNSEND, Circuit Judges.

PER CURIAM. Order affirmed on opinion of Holt, District Judge.

Digitized by Google

(154 Fed. 1005.)

SWIFT & CO., Limited, v. RUFFIN.

(Circuit Court of Appeals, Fourth Circuit. May 25, 1097.)

No. 724.

GUARANTY—CONTRACT—NONPERFORMANCE—DISCHARGE OF GUARANTOR.

A contract employing defendant's son as plaintiff's broker, which was signed by defendant as guarantor, required that the son should give a fidelity bond in such sum, and with such company as surety, as plaintiff should designate; plaintiff to pay the premium. Plaintiff sent the son a blank application for a bond, in a company selected by it, which he properly executed and returned to plaintiff, but the latter failed to obtain the bond until after the son's defalcation. *Held*, that such bond was for the security of both plaintiff and the guarantor, and that plaintiff's failure to obtain the same discharged defendant from liability on the guaranty.

In Error to the Circuit Court of the United States for the Eastern District of North Carolina, at Raleigh.

Action on contract of guaranty. The district court dismissed the bill at cost of complainant and from that decision the present proceedings in error are taken.

The opinion filed below, and here reprinted from 135 Fed. 437, was in full as follows:

PURNELL, District Judge. The facts, which will more fully appear from the findings of the special master, to which no exceptions are filed, and which is in all respects affirmed, are, in brief, as follows:

Complainant, engaged in the packing business, entered into a contract with E. C. Jones, son of defendant, from which the following facts only need be quoted, as presenting the question at issue:

"This agreement, made this Nineteenth day of March, A. D. 1903, between Swift and Company, Limited, party of the first part, and E. C. Jones, of Louisburg, North Carolina, party of the second part:

"Witnesseth: That the said party of the first part, in consideration of certain covenants to be performed by said second party, and the guaranty of J. F. Jones, appended, hereby appoints said second party its broker for the sale of certain of its products in Louisburg, North Carolina, which appointment the said second party accepts in consideration of certain commissions to be received by said second party, the agreement being subject to the following conditions and special agreements:

"Party of the second part shall give a fidelity bond in such sum and with such company as surety as party of the first part shall designate; party of the first part to pay the premium."

On the 27th day of March, 1903, J. F. Jones, the defendant, signed the following indorsement on the contract:

"In consideration that Swift and Company, Limited, execute the foregoing agreement with E. C. Jones, I hereby guarantee the performance thereof by E. C. Jones of all the terms and conditions therein by him agreed to be kept and performed. It is understood this is a continuing guaranty."

E. C. Jones was and is insolvent, and J. F. Jones is solvent. This suit is to recover for the default of E. C. Jones against J. F. Jones, as guarantor or indorser, the sum of $2,434. Prior to the shipment of any goods, E. C. Jones made personal application in writing for the fidelity bond as provided for in the contract, and sent the same to the com-

Digitized by Google

plainant; but the bond was never given, and no notice was given J. F. Jones that the fidelity bond was not given, nor notice of any default, until an agent of the complainant was sent to "check up" after default made.

Defendant, upon these facts, claims he is not liable, and this presents the question upon which the case rests principally.

The argument based on the relationship of father and son is very touching, and, from a moral standpoint, sound, but will it stand as law? A court cannot consider such arguments as controlling. Relations, except fiduciary and the like, can have no influence, but causes must ordinarily be decided as dealing between man and man, at arm's length. This much is in reply to the argument in complainant's brief that the father was appealing to complainant "for an appointment to a responsible position, knowing he [the son] was utterly insolvent," and "that thereupon the plaintiff [complainant], in consideration of the guaranty of the father that the son will perform all the obligations of his contract, and a faithful and true account render for all goods consigned to him, appoints the son its sale agent at Louisburg, North Carolina, and consigns to him large quantities of its products." The goods not being accounted for, the complainant "makes the righteous and reasonable demand that the father save it harmless from this loss," which demand, it is said, is well founded in law and good conscience, etc. Is it so well founded? That is the question at issue. Defendant contends it is not. It is hardly necessary to go into the issues of commercial law, to discuss the liability and distinction of sureties and guarantors. This is a contract—a commercial contract—which may be construed under the rule laid down by the Supreme Court in Davis v. Wells, 104 U. S. 170, 26 L. Ed. 686, and numerous authorities cited in complainant's brief, that "it has always been held by this court that, notwithstanding the contract of guaranty is the obligation of a surety, it is to be construed as a mercantile instrument, in the furtherance of its spirit, and liberally, to promote the use and convenience of commercial intercourse." And further, in the construction of all written instruments, to ascertain the intention of the parties is the great object of the court, and this is especially the case in acting upon guarantors. Generally all instruments of suretyship are construed strictly, as mere matter of legal right. This rule is otherwise when they are founded on valuable consideration. Mauran v. Bullus, 16 Pet. 528, 10 L. Ed. 1056; Bell v. Bruen, 1 How. 185, 11 L. Ed. 89; Lawrence v. McCalmont, 2 How. 450, 11 L. Ed. 326. Applying this rule to the construction of the contract, what was the intention of the parties? It will be noted that the contract was executed by E. C. Jones on the 19th of March, and eight days thereafter the guaranty was indoresd thereon. Possibly the guarantor looked over the contract, and the first thing that caught his eye, which is the first provision of the contract, was that the factor was to give a fidelity bond, not, as is argued, at the option of the complainant, but as part of the contract to indemnify the complainant against loss, and equally for the security of the guarantor. It appears that this was then a condition precedent for the guaranty, and a fundamental provision of the contract itself. It further appears by the finding of fact that the factor, understanding this provision in

Digitized by Google

the contract, made application to the complainant, in writing, for the fidelity bond. If it was optional with the complainant, as contended, it must be presumed that it had exercised this option, and designated the company and the amount of the fidelity bond; otherwise how did the factor know how to make the application? It is found as a fact that he did make the application in writing. The burden then was on the complainant to pay the premium and secure the bond, not only for its own benefit, but for the benefit of the guarantor. This is a reasonable, legal, and equitable construction of the contract; and, having neglected to pay the premium and secure the fidelity bond, the guarantor was released from all responsibility. Brant on Suretyship & Guaranty, § 397 (2d Ed.); United States v. McIntyre (C. C.) 111 Fed. 590; Leggett v. Humphreys, 21 How. 66, 16 L. Ed. 50; United States v. Hough, 103 U. S. 73, 26 L. Ed. 305; Meyers v. Block, 120 U. S. 213, 7 Sup. Ct. 525, 30 L. Ed. 642. The law and equity on this subject is so well established that it hardly requires the citation of authorities. As said by a distinguished judge:

"He who would charge a surety for his principal's breach of contractual duty must travel without deviation the way pointed out in the contract, however iron-bound it may be, for there is for the surety, in the enforcement of his bond, no equity nor latitude beyond its strict terms."

The conclusion reached is that the failure to secure the fidelity bond as required in the contract, being a condition precedent, compliance with which the guarantor had a right to expect on the part of complainant for his protection and for the protection of complainant, thus added to his liability and absolved him.

It is therefore considered, ordered, and decreed that the bill herein be dismissed, with judgment for the costs against the complainant, to be taxed by the clerk.

S. F. Mordecia and T. W. Bickett, for complainant.
F. S. Spruill and Wm. H. Ruffin, for defendant.

Before GOFF and PRITCHARD, Circuit Judges, and BOYD, District Judge.

PER CURIAM. The court below, on the finding of facts, to which there were no exceptions, properly applied the law pertaining thereto. The judgment complained of is without error. Affirmed.

(154 Fed. 425.)

CARROLL v. UNITED STATES.

(Circuit Court of Appeals, Ninth Circuit. May 13, 1907.)

No. 1,398.

1. PUBLIC LANDS—UNLAWFUL INCLOSURE—CRIMINAL PROSECUTION.

On the trial of an indictment for violation of section 1 of Act Feb. 25, 1885, c. 149, 23 Stat. 321 [U. S. Comp. St. 1901, p. 1524], containing three counts, the first charging the unlawful erection and construction of an inclosure of certain public lands, the second the unlawful maintenance and control of such inclosure, and the third the unlawful prevention and obstruction of free passage over said lands by means of fencing and inclosing

Digitized by Google

the same, a verdict of not guilty on the first and third counts is not inconsistent with one of guilty on the second.

2. CRIMINAL LAW—TRIAL—UNWARRANTED STATEMENTS BY COUNSEL—ACTION BY COURT.

It is a general rule, with rare exceptions arising from extreme cases, that prejudice created by unwarranted statements of counsel in the presence of the jury is sufficiently cured by an admonition by the court to the jury to wholly disregard such statements.

[Ed. Note.—For cases in point, see Cent. Dig. vol. 14, Criminal Law, § 1693.]

3. SAME.

During the trial of a criminal case the district attorney stated to the court in the presence of the jury that he was informed that attempts had been made by a brother of defendant to induce persons who were acquainted with jurors in the case to influence them in favor of defendant, and such attorney was directed by the court to investigate the matter, and, if he thought the information correct, to institute proceedings in contempt. On exceptions by defendant's counsel and on their request, the court at once admonished the jury that they should not be influenced in favor of or against either party by what had been said, but should lay the same entirely out of their minds and consider the case on the evidence alone, which admonition was repeated in the charge. *Held*, that the occurrence was not prejudicial to defendant so as to require a reversal of a judgment of conviction which was amply supported by the evidence.

[Ed. Note.—For cases in point, see Cent. Dig. vol. 14, Criminal Law, § 730.]

4. PUBLIC LANDS—UNLAWFUL INCLOSURE—DEED TO UNSURVEYED LANDS.

On the trial of a defendant charged with maintaining an unlawful inclosure of public lands, a deed from a railroad company to defendant for unsurveyed public lands, described by section and subdivison as though surveyed, is inadmissible to show color of title, since it creates no right to any particular land.

5. SAME—TRIAL—INSTRUCTIONS.

The charge of the court on the trial of a defendant charged with maintaining an unlawful inclosure of public lands, construed in its entirety, *held* free from error.

In Error to the District Court of the United States for the District of Montana.

The plaintiff in error was tried and convicted under an indictment charging him with the commission of three separate and distinct offenses under Act Feb. 25, 1885, c. 149, 23 Stat. 321 [U. S. Comp. St. 1901, p. 1524]—"An act to prevent unlawful occupancy of the public lands." 1 Supp. Rev. St. 477. In the first count it was charged that on June 29, 1905, he had wrongfully and unlawfully made, erected, and constructed an inclosure of certain public lands, aggregating about 2,040 acres; in the second count it was charged that on the same date he was wrongfully and unlawfully maintaining and controlling an inclosure of said public lands; and in the third count it was charged that on the same date he did wrongfully and unlawfully prevent and obstruct free passage and transit over and through said lands by means of fencing and inclosing the same. During the progress of the trial, and in the presence of the jury, and during the examination of a witness on behalf of the United States, the following colloquy occurred between the court, Mr. Rasch, the district attorney, and Messrs. Horsky & McBride, attorneys for the plaintiff in error:

"Mr. Rasch: Your honor, I was informed this morning, not very much to my surprise, that a list, a typewritten list, of the panel of the jury sitting in this case, had been distributed in town, with the request that if any of the parties to whom a list of that kind was handed had any friends on the jury, that they intercede with the jury, or some member or members thereof, on

Digitized by Google

behalf of the defendant; and I have here a copy of one of the lists that was handed to one gentleman with the request that he perform the same offices on behalf of the defendant. It contains, as your honor will notice, a list of the names of the jurors serving in this case, and, as I stated, it was not a matter of surprise to me to learn that that sort of thing was going on, in view of certain experiences and certain things I learned in the former trial. The list was handed to this gentleman by the brother of the defendant, Mr. Will Carroll, and in view of those circumstances I suggest that some steps ought to be taken, in view of the result of the former trial of this case. It is not only a contempt of court, but it is in direct violation of the statute with reference to proceedings of this kind in a court of justice.

"The Court: Is this Will Carroll that you have referred to, W. C. Carroll?

"Mr. Rasch: Yes, your honor; he is the man who delivered the list to one gentleman, with the request that if there were any members of the jury here who were friendly to him, that he exercise his influence with such jurors in the defendant's behalf.

"The Court: I am of the opinion that this is in itself a contempt of court, and that this party ought to be punished, if it is shown that the statement of the district attorney is substantiated by facts, and I will ask the prosecuting attorney to look into this matter just as soon as possible.

"Mr. Rasch: I shall proceed with the matter, your honor, just as soon as this case we now have in hand has been disposed of.

"The Court: And the court will take such action in connection with such proceedings as may be deemed advisable.

"By Mr. McBride: If the court please, I submit that this is a matter that should be taken care of at once, and not at the close of the case that is now on trial here. We want it taken up at once, immediately, if your honor please, in order that it may be disposed of, so that it will not operate to the prejudice of the defendant, Mr. Joseph T. Carroll, in the case now on trial. If any purpose was intended to be served by the district attorney in making the statement that he has made at this time, it was for the purpose of prejudicing the case of the defendant before this jury, or for the benefit of the plaintiff in this action, and to the prejudice of the defendant. If Mr. William Carroll has, in any respect, been guilty—

"The Court (interrupting): I don't think that you have any right to make that remark as to the purpose of the statement of the prosecuting attorney.

"Mr. McBride: If the court please, this is a matter before the court now. If any purpose at all is to be served by this matter, and bringing it up at this time, it is for some purpose in this case, for the benefit of the government, and against the interests of the defendant. If Mr. W. C. Carroll has, in any respect, been guilty of any contempt of this court, it is the duty of the attorney of this court to come before the court without any delay, and with the proper evidence to institute proceedings against the party guilty of such contempt. We should have an opportunity, if the court please, in protection of the rights of the defendant here, to show whether or not anything of the kind suggested by the district attorney, and intimated by him in his statement, is going on, or that any effort at all is being made by the defendant, or at his instance, which should not be made in his behalf. We submit, if the court please, that the statement of the district attorney here in this court, in the presence of this jury, sitting in the case of the United States against Joseph T. Carroll, is not proper. It puts us in the wrong light before the jury during the trial of this case, and operates against the interests of the defendant. If it is not intended to be prejudicial to the rights of the defendant, it certainly has no place here; and, if it is against the interests of the defendant, we certainly have a right to have the matter taken up right now, if the court please, and to have it disposed of without delay, and before further steps are taken in the trial of this case against Mr. Joseph T. Carroll. It is no more than right that proceedings should be taken at once to investigate this matter, as one of the rights of the defendant as a citizen of the United States. The United States is not here to do an injustice to any man; it is here to do justice, and it is here to see that the defendant gets a fair trial, and it is just as much a part of the case of one of the parties to this action of the United States against Joseph T. Carroll as it is the other party; and I submit, may it

Digitized by Google

please the court, that this matter should be taken care of at once, in justice to Mr. Joseph T. Carroll, the defendant in this case.

"Mr. Horsky: I not only wish to concur in everything that Mr. McBride has said, but I wish to add, also, that this matter has been brought up in a rather unusual and extraordinary way, as I view it. I regard it as unquestionably prejudicial to the interests of the defendant on trial here, and as calculated to place our cause in an entirely false light before the court and the jury. I, therefore, may it please your honor, most strenuously object to the remarks of the prosecuting attorney and his charge as intimated in his own ex parte statement, and I except to it in unqualified terms; and not only do I object and except to the remarks of the district attorney made in the presence of this jury, as I have done, but I wish to say and ask, and move, your honor, that this matter not only be immediately investigated, but that likewise every bit of the statement and of the remarks of the district attorney be expunged from the record, and that the jury be instructed in unquestionable terms to disregard every iota of that statement that has been made here.

"Mr. Rasch: I shall be prepared at any time, of course, to proceed in this case, when the court is at liberty to take the matter up. Of course, it is covered by the statute, and criminal proceedings may be instituted for a violation of that statute, in addition to the fact that it is a contempt of court. I simply made the statement to your honor for the reason that I feel that under the circumstances there ought to be a departure from what has always in the past been the practice of allowing the jury to separate; but I think under these circumstances that I have mentioned, and the experience we have had heretofore, the court, in justice and in fairness to all parties concerned, ought to make an order to the effect that the jury be kept together until the final determination of this case.

"Mr. Horsky: May it please the court, in so far as keeping the jury together is concerned, it is entirely agreeable to the defendant, and the only reason that this has not been stipulated in advance is because of the fact that we have unmeasured confidence in this jury, that we have unmeasured and unstinted confidence, and we have no objection at all, if your honor please, to have an order made as suggested by the prosecuting attorney, if your honor considers it proper that they should be kept together, in order that there may not be any suspicion or taint of suspicion, or taint of any suspicious practice by the defendant, or at the instance of the defendant, in the least, or even the remotest suggestion of it. But I wish to object and except in unqualified terms to the language of the prosecuting attorney, and the remarks he made in the presence of this jury with reference to this proceeding.

"The Court: The order will remain as I first indicated. I would like the prosecuting attorney to advise the court as soon as he can as to the matter, and upon such advice the court will take such steps as he may deem advisable. I will say to the jury that I had not intended to keep you together during the progress of the trial, until this disclosure this morning, but I think upon the disclosure the court will be warranted in ordering that you be kept together during the trial of this cause. It was not my intention to do so in the first place, but as the facts have been disclosed here, the court will order that you be kept together during the trial. I will say to you, however, with regard to what has taken place just now in court, that you should not allow that to influence your minds in the least, either one way or the other, because it is not a matter of evidence in this particular case, and it is not a matter that you should consider in this case, as to influencing your minds either for the government, either for or against the government, or for or against the defendant, and therefore you will lay this transaction entirely out of your minds, and everything that has been said here in court in connection with it.

"Mr. Rasch: If the court please, before proceeding with the case I desire to present an application for an order to show cause directed to William C. Carroll—

"Mr. McBride: If the court please, this is before the jury, and the court has expressly instructed the jury to disregard the statements of the district attorney regarding this matter, and we submit that to call a matter of that

Digitized by Google

kind to the attention of the court in the presence of the jury is entirely improper, and I wish to say further—

"The Court: Without any further discussion of the matter, I will ask that the jury retire until this matter has been submitted."

And thereupon the jury retired from the courtroom.

The other facts necessary to be considered on the writ of error are stated in the opinion. The jury found the plaintiff in error not guilty on the first and third counts, and guilty on the second count.

McBride & McBride and Edward Horsky, for plaintiff in error.
Carl Rasch, U. S. Atty.

Before GILBERT and ROSS, Circuit Judges, and HUNT, District Judge.

GILBERT, Circuit Judge, after stating the case as above, delivered the opinion of the court.

It is contended that the verdict of acquittal on the first and third counts necessarily involves acquittal on the second count, that the offenses as charged in the three counts overlap each other so that the evidence which would sustain one count would sustain all, and that the court erred in denying the motion which the plaintiff in error made for arrest of judgment on that ground. But it must be apparent that the plaintiff in error might be guilty of erecting an unlawful inclosure of public lands as charged in the first count, and yet might not be guilty of maintaining it, and it is equally clear that he might not be guilty of erecting an inclosure and yet be chargeable with maintaining and controlling it. It is also conceivable that one who maintains and controls an inclosure of public lands might not necessarily be guilty of obstructing and preventing free passage and transit over and through the public lands by means of fencing and inclosing the same, since the fence and inclosure might have been made by another. The indictment was returned on December 30, 1906. The evidence was that all of the fences had been erected prior to the fall of 1903, so that prosecution on the first count was barred by the statute of limitations; and it also showed that some of the fences were not made by the plaintiff in error, but were built by others before they came into his control.

A more difficult question is presented by the assignment of error which is addressed to the language and conduct of the district attorney concerning the contempt which was alleged to have been committed during the trial by W. C. Carroll, a brother of the plaintiff in error. Undoubtedly the proper course of the district attorney would have been to have asked that the jury be sent out of the courtroom before directing the attention of the court to the alleged contempt. Upon a careful consideration of the record, however, we are not convinced that the language and conduct of the district attorney was, under the circumstances, such prejudicial error as to justify a reversal of the judgment, for the court instructed the jury that they should allow nothing that was said or done in that connection to influence their minds in the least, either one way or the other, and that they should lay the transaction entirely out of their minds, and again, in charging the jury on that subject, said:

Digitized by Google

"Gentlemen of the Jury: Before proceeding further with this case, I will admonish you again, as I did last evening, not to let this other proceeding have anything to do with your consideration of this case. Put it out of your minds entirely, and decide the case absolutely upon the evidence adduced before you, and the law as it will be given you by the court."

With some rare exceptions arising from extreme cases, it is generally held that prejudice created by unwarranted statements of counsel in the presence of the jury is sufficiently cured by an admonition of the court to the jury, such as was given in the present case. Hopt v. Utah, 120 U. S. 430, 7 Sup. Ct. 614, 30 L. Ed. 708; Weeks v. Scharer, 64 C. C. A. 11, 129 Fed. 333; Chesebrough v. Conover, 140 N. Y. 382, 35 N. E. 633; Egan v. Murray, 80 Iowa, 180, 45 N. W. 563; State v. Hack, 118 Mo. 92, 23 S. W. 1089; Commonwealth v. Poisson, 157 Mass. 510, 32 N. E. 906; State v. Butler, 85 Me. 225, 27 Atl. 142; State v. Braswell, 82 N. C. 693; Edwards v. State, 90 Ga. 143, 15 S. E. 744; Strowger v. Sample, 44 Kan. 298, 24 Pac. 425; Chicago City Ry. Co. v. Pelletier, 134 Ill. 120, 24 N. E. 770; Johnson v. Brown, 130 Ind. 543, 28 N. E. 698. In consideration of the fact that the verdict was clearly justified by the evidence, we are of the opinion that the improper conduct of the district attorney, in view of the repeated injunction of the court to the jury to wholly disregard it, does not demand a reversal of the judgment, although it might have that effect in a case in which the evidence was less clear.

But the principal objection of the plaintiff in error in this connection is directed to the language of the court, which it is claimed was prejudicial in the highest degree. We do not discover that the court said, in the presence of the jury, anything not justified under the circumstances, nor do we see how the court could well have dealt with the matter so brought before it in any manner other than as shown in the record. In addition to this, the record discloses that no exception whatever was taken to any of the remarks so made by the court. In this connection it is proper to advert again to the fact that the jury were repeatedly instructed to disregard everything done or said in the colloquy relating to the contempt proceedings, and to decide the case absolutely upon the evidence adduced before them and the law as given by the court. Such an instruction was sufficient to cure error such as is charged here, if error it were. Lincoln v. Power, 151 U. S. 436, 14 Sup. Ct. 387, 38 L. Ed. 224; Lovejoy v. United States, 128 U. S. 171, 9 Sup. Ct. 57, 32 L. Ed. 389; McKnight v. United States, 130 Fed. 659, 670, 65 C. C. A. 37.

It is contended that the court erred in ruling that a certain deed of the Northern Pacific Railway Company to the plaintiff in error was not admissible in evidence for the purpose of showing color of title. The deed was for unsurveyed land "which, when surveyed, will be described as follows: The northeast quarter of the northwest quarter, and the south half of the northwest quarter, of section 25, in township 4 north, of range 7 west of the Montana principal meridian." The court ruled that the deed was admissible for the purpose of showing good faith, but for no other purpose. We find no error in that ruling. Until public land is officially surveyed, it cannot be described or conveyed by reference thereto as sections or subdivisions of sections. In

Digitized by Google

Magwire v. Tyler, 8 Wall. (U. S.) 650, 19 L. Ed. 320, it was held that conveyance of such lands "creates no right of private property in any particular tract of land which can be maintained in a court of justice without an antecedent survey and location." And in Robinson v. Forrest, 29 Cal. 217, it was well said:

"Even after a principal meridian and base line have been surveyed, neither the sections nor their subdivisions can be said to have any existence until the township is subdivided into sections and quarter sections by an approved survey. The lines are not ascertained by the survey, but they are created. * * * There is in fact no such land as that described in the petition until it has been located within the congressional township by an actual survey and establishment of the lines under the authority of the United States."

See, also, Cragin v. Powell, 128 U. S. 691, 9 Sup. Ct. 203, 32 L. Ed. 566; United States v. Birdseye, 137 Fed. 516, 70 C. C. A. 100; United States v. Montana L. & M. Co., 196 U. S. 573, 25 Sup. Ct. 367, 49 L. Ed. 604. The court in instructing the jury gave to the plaintiff in error all the substantial benefit that would have accrued to him had the deed been ruled admissible in evidence for the purpose of showing color of title. The instruction was that, if the plaintiff in error honestly believed that he had a right to inclose such land by reason of having previously procured the deed, the jury might consider that fact as tending to show the intent with which he inclosed that particular tract of land. "Because," said the court, "without the intent to inclose public lands, knowing them to be such, there can be no offense."

Error is assigned to the following portion of the charge to the jury:

"Your authority in judging of the effect of evidence is not arbitrary, but should be exercised with legal discretion and in subordination to the rules of evidence. You are not bound to find in conformity with the declarations of any number of witnesses which do not produce conviction in your minds. or against a presumption or other evidence satisfying your minds."

It is urged against this instruction that apparently it was aimed at the witnesses of plaintiff in error and intended to discredit them, since there were 14 of them, whereas there were but 4 for the prosecution; and that it was erroneous for the further reason that it conveyed to the jury the idea that the plaintiff in error must make out his defense so clearly as to produce conviction in their minds. We cannot see that the instruction is open to either objection. It clearly is the law that the jury were not bound to find in conformity with the declarations of any number of witnesses which did not produce conviction in their minds. The portion of the charge so excepted to should be read in connection with the general charge on that branch of the case, in which the court defined the term "reasonable doubt," and instructed the jury that all the presumptions of law, aside from the effect of evidence, are in favor of innocence, and that every person is presumed to be innocent until proved guilty. Said the court:

"If, therefore, upon such proof as here adduced, considering it in its fullness and entirety, there remains in your minds a reasonable doubt as to the guilt of the accused, he is entitled to the benefit of it by an acquittal; that is, the evidence must establish guilt under the charge to a reasonable and moral certainty, a certainty that convinces your reason and judgment, acting under your duties and obligations as jurors."

Digitized by Google

It is plain that, when the whole charge is considered, the jury could not have been misled by anything that was said in the particular portion thereof that was excepted to. Agnew v. United States, 165 U. S. 36, 17 Sup. Ct. 235, 41 L. Ed. 624.

We find no error. The judgment is affirmed.

(154 Fed. 432.)

QUINTON et al. v. NEVILLE et al.

(Circuit Court of Appeals, Eighth Circuit. June 8, 1907.)

No. 2,294.

1. COURTS—LAW OF THE CASE—PREVIOUS DECISIONS.

Where no appeal was taken from an original decree, and a bill of review was denied, all matters within the pleadings and jurisdiction of the court, expressed in the decree, were res judicata, and not reviewable on appeal from a supplemental decree.

[Ed. Note.—For cases in point, see Cent. Dig. vol. 13, Courts, § 340.]

2. EQUITY—JURISDICTION—RETENTION FOR COMPLETE RELIEF.

Where a federal court of equity acquired jurisdiction of a suit by an administrator with the will annexed, to determine a claim of lien on certain lands belonging to testator and declare the rights of the parties, the court having determined that the title to the land was in the administrator and that the defendants were entitled to a lien under a certain contract, it was not bound to remand the cause to the probate court for the enforcement of such lien by a sale of the land, but could retain jurisdiction until complete justice had been accomplished by a sale of the land and distribution of the proceeds between the administrator and the lienors.

[Ed. Note.—For cases in point, see Cent. Dig. vol. 19, Equity, §§ 103–114.]

3. JUDICIAL SALES—LIENS—FORECLOSURE—SALE OF LAND—DECREE—PLATTING OF LAND.

Gen. St. Kan. 1901, § 3012, provides that where it is made to appear by any executor or administrator that any lands of the estate, lying near an incorporated town or city would be materially advanced in value by being platted into town and city lots, the court may order the executor or administrator to subdivide and plat the land. Section 3013 requires the order directing such plat to be made on petition of the executor or administrator, to be accompanied by an accurate plat of the proposed subdivision; and section 3014 requires the executor or administrator, on receipt of the order, to acknowledge and file the plat as an addition to the city, and that no sale of any part of such real estate shall be ordered by the probate court until the plat has been acknowledged and filed. *Held*, that where an administrator with the will annexed sued to have an alleged lien of the defendants on property adjoining a city declared, and the land sold, it was a proper exercise of the court's discretion to refuse, without the consent of the administrator, to direct that the property be platted into a city subdivision, before sale, under such sections, and to require that the land be surveyed and subdivided into parcels containing not less than 5 nor more than 10 acres.

4. SAME—CONDITIONS—FORFEITURE.

Where a lien was imposed on the excess of the proceeds of a sale of land belonging to an administrator with the will annexed, over $60,000, the owners of the lien could not object to a provision in the sale decree requiring each bidder as evidence of good faith to deposit 20 per cent. of the amount of his accepted bid, to be forfeited and applied to the costs if the bid was not made good, the commissioner being authorized to ac-

Digitized by Google

cept the receipt of the administrator in lieu of cash in case he became the purchaser at the sale.

5 SAME—APPOINTMENT OF MASTER—CLERK OF COURT.

Where an order appointing a clerk of the Circuit Court of the United States special master to conduct a judicial sale of certain land under a decree of the Circuit Court did not specify special reasons therefor, the order was erroneous to that extent, under Act Cong. March 3, 1879, c. 183, 20 Stat. 415 [U. S. Comp. St. 1901, p. 591], prohibiting the appointment of any clerk of a District or Circuit Court of the United States or their deputies as receiver or master in any case, except where the judge shall determine that a special reason exists therefor, to be assigned in the order of appointment.

6 SAME—AMENDMENT OF DECREE.

Such error did not affect the balance of the sale decree, which was amendable in that respect.

Appeal from the Circuit Court of the United States for the District of Kansas.

For former opinion, see 152 Fed. 879.

E. S. Quinton (A. B. Quinton, on the brief), for appellants.

E. Wakeley (Troutman & Stone, on the brief), for appellees.

Before SANBORN, Circuit Judge, and PHILIPS, District Judge.

PHILIPS, District Judge. The facts leading up to the appeal herein sufficiently appear from the statement in Quinton et al. v. Neville, Adm'r et al., 81 C. C. A. 673, 152 Fed. 879, decided by this court at the December term, 1906, wherein these appellants sought by bill to have the original decree herein reviewed. Prior to that decision the Circuit Court had proceeded to enter a supplemental decree, in words and figures as follows:

"It appearing to the court that no sale of the tract of land involved in this cause has been or could be made at private sale as provided by the decree of this court of November 19, 1903, and that the parties are unable to agree upon a method of sale thereof, it is therefore now by the court here further ordered, adjudged, and decreed:

"Good cause existing therefor, George F. Sharitt, Esq., is hereby appointed special master to make the sale of the said land, to wit: The east half of the southeast quarter of section 25 in township 11 of range 15 east, and also a part of the east half of the northeast quarter of said section described as follows: Commencing at the southeast corner of said northeast quarter, then running northerly 13 rods, thence west at a right angle one quarter of a mile, thence south at a right angle 13 rods, thence east at a right angle to the place of beginning, all in Shawnee county in the state of Kansas—and to perform the other duties herein specially imposed upon him. He shall cause the land to be surveyed by a competent surveyor and so divided into parcels, each containing not less than 5 nor more than 10 acres, that a purchaser of any thereof may, if he so desires, advantageously plat the same with due regard to the neighboring streets and alleys of Topeka and Potwin. A map or plat of such survey and a sufficient description by metes and bounds of each numbered parcel shall be filed in this cause. The map shall show no streets or alleys upon the land to be sold nor subdivision of the parcels into blocks or lots, but it shall show the neighboring streets and alleys of Topeka and Potwin. The said special master shall forthwith cause the land to be advertised and sold in the same manner as in cases of sale of real estate upon execution, but without appraisement; and also excepting that he shall offer each and all of the parcels separately and also the tract of land as an entirety, and if the aggregate of the bids for the parcels shall

Digitized by Google

exceed that for the tract as an entirety he shall accept them, otherwise he shall accept the bid for the entire tract; provided, however, that no sale whatever shall be made unless he shall receive for all of the land at least the sum of $61,000. The said special master may require from each bidder as an evidence of good faith the deposit of 20 per cent. of the amount of his accepted bid, the same to be forfeited and applied upon the costs of this cause if the bid be not made good; provided, however, that the master shall receive and accept the receipt of the complainant James Neville, as administrator, for any sum or sums not exceeding in the aggregate $60,000 in lieu of cash to that amount, and that within that amount no deposit as earnest money upon his bids shall be required of him. The advertisement for the sale of the land shall adequately describe the tract as an entirety and also each numbered parcel thereof, and shall contain the conditions of sale herein expressed, together with such others as may be appropriate under the law. The proper costs of the above-mentioned survey, map, and description and of making this sale shall be reported to the court and taxed among the costs of the cause. The master may adjourn the sale from time to time until his endeavor to sell the property has met with success or failure, giving notice thereof by public announcement at the time of adjournment. He shall forthwith report to the court his proceedings hereunder, and bring into court the proceeds of any sale that is made for its further order in the premises. Upon a sale of the land and confirmation by the court all of the parties to this cause and those claiming through them shall stand debarred of all estate therein or lien thereon except such as may be acquired by purchase at the sale; and in the event that no sale can be made in conformity herewith for a sum in excess of $61,000, then the defendants shall stand debarred of every estate in or lien upon said land.

"The cause is reserved for such other orders and decrees as may be necessary in the premises."

From this decree Mary K. Quinton and E. W. Poindexter, representing the original beneficiaries of the claim of Eugene S. Quinton and Abram Bergen, have appealed.

It is transparent from the assignment of errors that counsel for appellants are ingeniously seeking by this appeal to have reviewed what was found and adjudged by the original decree. As that decree was not appealed from, and the bill of review was denied, all matters within the original pleadings and within the competency of the court expressed in the decree are res adjudicata. The decision of this court on the bill of review necessarily recognized the jurisdiction of the Circuit Court to render the original decree. That decree established the title of the complainants therein to the land in question. It recognized and declared the equity of the defendants therein, the appellants here, to a charge on the lands for their compensation as provided in the original contract, and as a necessary means to the ascertainment of that compensation it directed a sale of the land.

The contention is made that the will under which the executor claims, which was executed and probated in the state of Nebraska, was not recorded in Shawnee county, Kan., where the land is situate; without which precedent act, it is asserted, the Circuit Court never acquired jurisdiction to make any decree in the cause. This objection was raised on the hearing of the bill of review. Judge Adams, who delivered the opinion of the court, after adverting to the fact that the record in the case disclosed a union of both possession and title in the complainants below, that as the administrator c. t. a., lawfully constituted in the state of Nebraska, the domicile of the testator, charged with the

Digitized by Google

execution of the trust, was empowered by the statute of Kansas to sue on the recording of the will in that jurisdiction, said:

"Inasmuch as it is averred in the original bill that complainant Neville had filed an authenticated copy of his appointment as administrator with the will annexed in the probate court of Shawnee county, and had caused the same to be recorded therein, or if the averment is ambiguous as to whether the will itself as distinguished from the appointment was filed and recorded, inasmuch as the will might have been so recorded, the finding by the Circuit Court that the legal and equitable title were vested in the complainants as stated in the bill conclusively established the fact for the purpose of this case that such will was so recorded, or that some other equally effective step was taken to confer legal title upon Neville, who only according to the pleadings could hold the legal title under the will of the testator. He was also in possession as admitted by the pleadings. From the foregoing we think it clearly appears that Neville as administrator c. t. a. not only had a legal right to sue in Kansas, but that, as owner of the legal title and in possession of the land in controversy, he also had a cause of action suable in Kansas to protect such title and possession."

It is now insisted that when the Circuit Court had found, as it did in the original decree, that the title to the land was in the complainants, and settled the construction of the contract between the testator, Morell C. Keith, and Quinton and Bergen, and further directed that as a means for the ascertainment of the amount of the charge on the land in favor of Quinton and Bergen the land should be sold, the full purposes of the court in taking jurisdiction of the controversy were subserved, and thereupon the matter should have been remitted to the jurisdiction of the probate court of Shawnee county, Kan., to proceed as in the case of estates in administration under probate. This suggestion cannot be entertained. "'The court which first acquires jurisdiction of specific property in a suit or proceeding to enforce a lien upon it or to subject it to a sale in a case in which it may find it necessary or convenient to take possession of, or dominion over it, is entitled to retain that jurisdiction until the suit is at an end;" and, consequently, until a complete remedy is enforced. Brun v. Mann, 80 C. C. A. 513, 151 Fed. 146, loc. cit. 152.

A court of equity does not administer justice by halves. "It is a rule of courts of equity to do complete justice when that is practicable, not merely by declaring the right, but by affording a remedy for its enjoyment. A court of equity does not turn a party to another forum to enforce a right which it has itself established." 2 Bates on Federal Equity Procedure, § 724, p. 773. Having rightly assumed jurisdiction of the controversy between these parties, in order to adjust the lien claimed by appellants on the land, and having determined that, in order to work out that lien and render available the estate therein of the administrator c. t. a. and the heir, it was necessary to sell the land, it inheres in the powers of a court of equity to prescribe not only the manner of conducting, but also to supervise such sale. This is essential to enable the court to see to it that its ministerial officer, charged with the execution of the decree, shall proceed in conformity therewith; a duty which the chancellor would fall short of performing should he remit the carrying out of his decree to a foreign tribunal over which he has no control. The sole purpose of recording the will in Shawnee county, Kan., was to enable the administrator c. t. a. to dispose of the

Digitized by Google

land to meet the debts of the estate in the domicile of the testator; and in order thereto it became necessary to remove the obstruction and cloud on the title of the asserted lien of the appellants. No question is presented on this record respecting the rights of local creditors in the state of Kansas.

The important question to be answered on this appeal is, was the supplemental decree a proper one? By the original decree one Bolmer was appointed special master, with directions to invite and receive offers from proposed purchasers for the land until April 1, 1904, and to report such offers to the court for its acceptance or rejection. The decree fixed the minimum price at $61,000. If any offer not less than that sum should be consented to by all the parties, the sale should be made. Should no such offer be made and consented to by April 1, 1904, the decree provided that "then the said land shall be advertised and sold, under such conditions and regulations as the court may hereafter prescribe, but not at a less sum than $61,000." There having been no sale up to April 1, 1904, the Circuit Court made the supplemental order, as it was authorized by the original decree to do. Various complaints are made by the appellants touching the provisions of this supplemental decree; chief of which is, the court should have directed that the master should first cause the whole 80-acre tract of land to be surveyed, laid off into blocks and lots, streets and alleys, and a plat thereof filed as an addition to the city of Topeka, within the corporate limits of which the land is situate. This, counsel contends, is the course pointed out by the statute of the state of Kansas when and where an executor or administrator proceeds under the probate laws. The statute of Kansas (Gen. St. 1901) pertaining to executors and administrators, provides as follows:

"Sec. 3012. Where it may be made to appear to the probate court of any county in this state by any executor or administrator that any lands of the estate represented by such executor or administrator, lying in or sufficiently near some incorporated town or city to be made an addition thereto, would be materially advanced in value by being subdivided and platted into town or city lots, the said court may issue an order to such executor or administrator to subdivide and plat such land.

"Sec. 3013. Before any order shall be issued by the probate court as provided for in the preceding section, a petition for that purpose shall be filed in such court by such executor or administrator, which petition shall be accompanied by an accurate plat of such proposed subdivision, showing the lots duly numbered, and the streets, alleys and other public grounds, and the respective dimensions of each; and the defendants made to such petition, and the notices to such defendants, and all other proceedings thereon to the procuring of such order, shall be in substantial conformity with the rules of procedure in such court in cases pertaining to the disposal of real estate of deceased persons.

"Sec. 3014. Upon the receipt of such order the executor or administrator shall immediately proceed to acknowledge such plat and file the same for record as an addition to such incorporated town or city for the benefit of such estate, in substantial conformity with the provisions of the act entitled 'An act concerning the plats of cities and towns,' and with like effect as in cases of plats filed by other proprietors: Provided, that no sale of any part of such real estate shall be ordered by the probate court until such plat be acknowledged (and) is filed as herein required."

The statute (sections 4359, 4360, and 4364, c. 78, Gen. St. Kan. 1901) provides that, whenever any addition to any city or town shall be laid

Digitized by Google

out, the proprietor or proprietors of such city or town or addition shall cause to be made out a map or plat thereof, particularly describing the ground reserved for public purposes, and that all the lots intended for sale shall be described by numbers, and their precise length and width. Such map or plat shall be acknowledged by the proprietor; and it then declares that such maps or plats, so acknowledged and certified and recorded with the register, shall be a sufficient conveyance to vest the fee of such parcels of land named or intended for public uses in the county in which such city or town is situate, in trust for the uses therein named, etc. The Supreme Court of Kansas holds that, "before a plat of an addition to a city will operate as a grant of the land to the public for use as a street, it must have been acknowledged and recorded by the owner of the land." Brooks v. City of Topeka, 34 Kan., loc. cit. 280, 8 Pac. 393. Therefore, to make the platting of this 80 acres of land into lots and blocks, with streets and alleys, conformable to the statute, the plat would have to be executed and acknowledged by the administrator c. t. a.

It is observable under the statute above quoted that whether or not the probate court could proceed to direct this property to be platted into blocks, lots, etc., would depend upon the initiative of the administrator or executor. The authority of the probate court is conditioned upon the petition of the executor or administrator. And it must be made to appear to the probate court by the executor or administrator that the lands are so allied or near to the incorporated town or city as to be materially advanced in value by being subdivided into blocks, lots, etc. The probate court could not, sua sponte, make such order, for the statute expressly declares that "before any order shall be issued by the probate court * * * a petition for that purpose shall be filed in such court by such executor or administrator." The appellants are asking the United States court to do what the probate court itself could not do if this cause were within its jurisdiction.

Has the United States court, acquiring jurisdiction over this administrator, coming into it solely for the purpose indicated by the bill of complaint, to have an obstruction removed to enable him to sell a body of 80 acres of land subject to the lien of the appellants thereon for any excess over a specified sum, the power to impose upon the relief to which it has found the appellees entitled the condition and burden that he shall plat the land into blocks, lots, streets, and alleys, and execute and file the same so as to dedicate such streets to the city of Topeka? No precedent has been cited for the exertion of such power by a court of equity, especially where the proprietor of the land, as in this case, is not consenting thereto. The exercise of such extraordinary jurisdiction by the federal court, if not arbitrary, would be of such questionable right and propriety that it should not seek for an occasion to invoke it. In any event, its exercise would rest in the sound discretion of the chancellor. The Circuit Court, to whom the manner of dividing this property was addressed, after hearing the suggestions and objections of the parties in interest, declined to accede to the appellants' suggestions. The decree he made expressed his best judgment. Was his discretion so abused as to invite the interference therewith of this court? The court was held in the city where this

Digitized by Google

property is located; the judge heard the affidavits and counsel respecting the manner in which the sale should be conducted. Is the Court of Appeals in any better situation to exercise a wise judgment in this matter than the Circuit Judge? His judgment was that it was not for the best interests of the parties concerned to have this property platted into blocks, lots, streets, and alleys, and to have such plat acknowledged and filed in the recorder's office, thereby dedicating the streets and alleys to the public use, with all the incidents and burdens that might attach to such dedication. He deemed it wiser to divide the land into tracts of not less than 5 nor more than 10 acres, and to offer it for sale in such subdivisions; his thought being that investors would more likely buy in such subdivisions than otherwise. This it seems to us to be reasonable and practical, as the purchaser would thus be left at liberty either to retain his investment in the present shape, at his pleasure, so that, if at any time he should conclude that it were better to plat the land under the local statute, he could do so in such manner as in his judgment would be most profitable to make a sale of the land whenever he saw fit to sell.

There is an important provision of the decree, well to be noted. It provides for the sale of the divisional parcels separately, and at the conclusion thereof the master shall put the whole tract up and offer it in bulk, with directions to accept the bid or bids which produce the larger sum of money. This is the customary method of conducting such sales in equity, as experience has demonstrated that it is attended with the best results. How could this method be pursued if the court were to divide up this property into blocks, lots, streets, and alleys for city purposes? In order to sell the lots at public outcry it should be expected that there would be a purchaser for each lot at the sale—an occurrence not reasonably to be anticipated. Purchasers of such lots, if desired for homes, could hardly be expected to be found for each one of the lots at an auction sale. Common experience attests the fact that such purchasers are rarely prepared to pay cash in hand, but more usually buy them on the installment plan. If it could be expected that persons would buy the lots in detail, or even in bulk, for speculative purposes, is it reasonable for the court to assume, in reviewing the manner adopted by the Circuit Court, that such speculative purchaser would pay more for the lots in bulk than he would pay for five-acre tracts or more, with the privilege reserved to himself of platting the lands at his own pleasure? These are purely matters of administrative discretion and business judgment, which the chancellor on the ground should be assumed to have as wisely exercised as this court might without the opportunity of viewing the property.

There is another consideration in favor of the method adopted by the Circuit Court. The long delay consequent upon this litigation provoked by appellants, demands that there should be an end to this controversy. It is essential to the winding up of the administration of this estate that this delay should not be further protracted. If this property were platted in conformity with the statute of Kansas, and offered for sale in detail, the probability is that the most desirable lots would find a bidder, and many less desirable ones would have no bidders or little competition. Before the property could be put up and

Digitized by Google

sold in bulk, there would have to be a sale of the lots in detail, to enable the master to determine whether it were best for the interests of the parties to accept the aggregate of the sales in detail or the sale in bulk. It would probably result in repeated advertisements and offerings for sale, thus protracting the closing up of this controversy to an intolerable extent. We are of opinion that the sale of this property under the plan adopted by the Circuit Court would probably produce better results than any which occurs to us.

It is urged against the assumption of jurisdiction by the Circuit Court to make sale of the land that it is incompetent to make any distribution of the proceeds, as that is intrusted by the law to the functions of a court of probate. The answer to this is that, having jurisdiction to fix and enforce the charge, in the nature of a lien upon the land, in favor of these appellants, any fund arising from the sale applicable to such lien would certainly, proprio vigore of the decree, be paid over on order of the court to the appellants. As such claim is a fixed lien on the fund in excess of the $60,000, first to be paid to the appellees, in no sense would it constitute an asset of the decedent's estate, to be marshaled and distributed under probate. When these appellants shall have received under the order of court their ascertained fee, they will neither have nor feel any concern respecting the distribution of the $60,000, or more, going to the administrator. When the administrator shall have received the fund arising from the sale, it will come to him officii virtute, to be accounted for by him to the proper probate court for administration.

Complaint is made of that provision of the decree which authorizes the master to "require from each bidder, as an evidence of good faith, the deposit of twenty per cent. of the amount of his accepted bid, the same to be forfeited and applied upon the costs of this cause if the bid be not made good." It is contended (1) that the court had no power to exact such forfeiture, and (2) that the decree makes no provision for any disposition or application of any fund so arising. Immemorially it has been the practice in courts of equity to require all bidders at judicial sales under decree of property of large value a qualifying deposit as an earnest of good faith on the part of the bidder. This is to prevent mere by-bidding, as well as bids by irresponsible parties, who, after the property is "knocked down" to them, disappear without making payment, thereby possibly making the sale a miscarriage, necessitating its postponement and readvertisement and the risk of securing a better bid than the genuine preceding bid of such impostor. The sum so forfeited, the decree declares, shall be applied "upon the costs of this cause if the bid be not made good." We are not called upon here to say what disposition would be made of any surplus, if any, after the satisfaction of the costs arising in the cause, as this might be merely academic. As this provision of the decree is as much for the protection and benefit of appellants as the appellees, it is not apparent why either should complain of it.

It is further suggested that the imposition of such forfeiture might deter purchasers from bidding, and thereby possibly enable the complainants below to become the purchaser "at their own price, and on their own terms, to the deprivation of said Mary K. Quinton and E.

Digitized by Google

W. Poindexter of all right and compensation whatever." A sufficient answer to this is that the appellees cannot bid in the property for less than $61,000, and before appellants could become interested in the result there must be an excess over the minimum sum; and the opportunity to bid is as open to them as to the appellees. If any advantage exists in favor of the administrator in respect of his privilege, to be credited on his bid of $60,000 (to go to him in any event), it is because this inheres in the nature of the original contract between the parties. The court is enforcing the contract as interpreted and declared in the original decree, and not to meet the necessities of appellants' situation as that may happen to be at the time of the sale.

Error is assigned of the action of the court in designating Mr. Sharitt, clerk of the court, as special master to superintend and conduct the sale of this property. The act of Congress approved March 3, 1879 (20 Stat. c. 183, p. 415 [U. S. Comp. St. 1901, p. 591]), provides that:

> "No clerk of the District or Circuit Courts of the United States, or their deputies shall be appointed a receiver or a master in any case except where the judge of said court shall determine that special reasons exist therefor, to be assigned in the order of appointment."

The recitation in the record in this respect is as follows:

> "Good cause existing therefor, George F. Sharitt, Esq., is hereby appointed special master to make sale of the said land."

The foregoing act of Congress was passed for a purpose. It was intended to prevent abuses which it was assumed had arisen out of favoritism for such officers of the court. It nevertheless recognized and contemplated that special reasons might exist in the particular case or instance for departing from the interdiction of the statute; but as a safeguard that the spirit as well as the letter of the statute should be observed, while reposing a discretion in the judge of the court in making such appointment, it requires that he should assign in the order of appointment the special reasons inducing such selection. While we are well satisfied that there was good cause existing which induced the learned Circuit Judge to select Mr. Sharitt as special master, the special reason is not assigned of record. It is highly probable, from the court's knowledge of Mr. Sharitt, that by reason of his intelligence, information of the property, and good business judgment his selection was well justified.

This error, however, does not invalidate or affect the balance of the decree. It was a mere failure to assign the good cause or reason on the record. The decree is clearly amendable in this respect. The supplemental decree of the Circuit Court is affirmed, in all respects, save in the matter of not assigning the special reason on the record for the designation of Mr. Sharitt as special master; and the cause is remanded to the Circuit Court with leave to so amend the order, otherwise to designate another master. As the appellants did not at the time call the Circuit Court's attention to the defect in the form of the order designating said special master so that such defect might have been then corrected, the costs of this appeal will be taxed in the proportion of three-fourths against the appellants and one-fourth against the appellees.

Digitized by Google

(154 Fed. 952.)

DAVIS & ROESCH TEMPERATURE CONTROLLING CO. v. ROESCH et al.

(Circuit Court of Appeals, Second Circuit. June 29, 1907.)

No. 276.

PATENTS—INFRINGEMENT—PRESSURE GOVERNOR.

The Roesch patent, No. 717,122, for a pressure governor, claim 5, *held* valid and infringed by one hot water regulator made by defendants, but, in view of the narrow construction which must be given it on account of the prior art, not infringed by a second regulator.

Appeal from the Circuit Court of the United States for the Eastern District of New York.

On appeals by both parties from a decree of the Circuit Court for the Eastern District of New York holding valid claim 5 of letters patent, No. 717,122, issued to Alfred Roesch, December 30, 1902, for an improvement in pressure-governors. The decree adjudged that the defendants have infringed the said claim by making and selling a hot water regulator known and designated as "Exhibit A." From this part of the decree, the defendants appeal. The decree further adjudged that the defendants did not infringe by making and selling a regulator known as "Exhibit B." From this part of the decree, the complainant appeals. The opinion of the Circuit Court is reported in 148 Fed. 713.

James C. Chapin, for complainant.

Seabury C. Mastick, for defendants.

Before LACOMBE, TOWNSEND, and COXE, Circuit Judges.

PER CURIAM. In view of the prior art, showing that the field of invention was a narrow one, and in view of the express limitations of the fifth claim, we think that the judge of the Circuit Court was correct in holding that it cannot be construed to cover the defendants' apparatus known as "Exhibit B." This exhibit, a drawing of which appears in the opinion below as printed in the Federal Reporter, does not contain the second element of the combination of the claim, viz., "two oppositely-opening valves fitted to said casing to engage said seats and arranged in line with each other," unless a construction is placed on the claim which ignores the obvious meaning of the language employed and is unwarranted by the prior art.

As to Exhibit A, we agree with the complainant's expert that it is "an exact and complete embodiment of what is set forth in claim five of the Roesch patent."

We find it unnecessary to add anything further to the opinion of Judge Thomas who, we think, correctly disposed of all the issues presented.

The decree is affirmed, without costs of this court.

TOWNSEND, Circuit Judge, heard the argument and participated in the preliminary consultation.

Digitized by Google

(154 Fed. 464.)

CITY OF PITTSBURGH v. JONATHAN CLARK & SONS CO.

(Circuit Court of Appeals, Third Circuit. May 29, 1907.)

No. 62.

1. MUNICIPAL CORPORATIONS—PUBLIC WORKS—CONTRACTS—CONSTRUCTION.
A contract for a public work for a city, which contained a clause giving the director of public works of the city the right to stop the work of the contractor at any time if in his opinion it was not being done in accordance with the contract and to complete the work at the contractor's cost, construed, and provisions requiring the contractor to obtain a final certificate from the director of public works of the completion of the work according to the contract before being entitled to final payment, and making such director the final arbiter between the parties in all matters of dispute, *held* not applicable, and not to create conditions precedent to the bringing of an action to recover the contract price, where the director stopped the work of the contractor under the power given him and had the work completed himself.

2. WRIT OF ERROR—MATTERS REVIEWABLE—QUESTIONS NOT PRESENTED TO TRIAL COURT.
In actions at law the function of the Circuit Court of Appeals is exclusively the correction of errors below, and questions which were not presented to nor decided by the trial court are not open for review.
[Ed. Note.—For cases in point, see Cent. Dig. vol. 2, Appeal and Error, §§ 1018–1034.]

In Error to the Circuit Court of the United States for the Western District of Pennsylvania.

For opinion below, see 146 Fed. 441.

A. M. Thompson, for plaintiff in error.

E. Y. Breck, for defendant in error.

Before GRAY, Circuit Judge, and HOLLAND and LANNING, District Judges.

HOLLAND, District Judge. This is an action arising out of a contract for the construction of a reservoir in the city of Pittsburgh. On the 13th day of May, 1897, Jonathan Clark & Sons Company, a corporation of the state of Illinois, contracted with the city of Pittsburgh to build a reservoir in Highland Park, at an estimated cost price of $420,000. The cost, however, was not a fixed, but a variable sum, depending upon the amount of work which was actually performed under the plans and specifications. The price per unit of work, however, was fixed and determined by the written contract, which provided, inter alia, that payments should be made from time to time in a certain specified manner, to wit, once a month upon estimates made of the quantities of work performed, of whatever kind, under the contract at unit prices, and that the contractor should receive 85 per cent. of the total amount due upon the monthly estimate, the city retaining 15 per cent. It was further provided that after the completion of the contract a final estimate was to be made which would be conclusive not only as to the prices but also as to the quantities. The director of the department of public works of the city of Pittsburgh was empowered by the parties to make both the monthly and final estimates.

Digitized by Google

The contract provided that:

"The said party of the second part further agrees that if at any time the director shall be of the opinion that the said work, or any part thereof, is unnecessarily delayed, or that the said contractor is wilfully violating any of the conditions or covenants of this agreement, or is executing the same in bad faith, he shall have the power to notify the contractor to discontinue all work under this contract, or any part thereof, and thereupon the contractor shall cease said work, or such part thereof, and the director shall thereupon have the power to place such and as many persons as he may deem necessary, the same to be employed by contract or otherwise, to work at and complete the work herein described, or any part thereof, and to use such materials as he may find upon the site of said work or to procure other materials for the completion of the same, and to charge the expense of said labor and materials to the aforesaid contractor, and the expense so charged shall be deducted from and paid by the party of the second part out of such moneys as may then be due, or may at any time thereafter become due to the said party of the second part, under and by virtue of this agreement; and in case such expense is less than the sum which would have been payable under this contract, if the same had been satisfactorily completed by the said party of the second part, then, and in that event, the said party of the second part shall be entitled to receive the difference; but in case such expense shall exceed the last said sum, then, and in that event, the said party of the second part, his sureties and heirs and assigns, shall pay the amount of such excess to the party of the first part on notice from said director of the excess due."

The contractor entered upon the execution of the work under the contract, and proceeded therewith until April 16, 1900, when the director of public works, acting on behalf of the city, sent a notice to the contractor that in his (the director's) opinion the work provided for in the contract—

"has been and is unnecessarily delayed, and that you have wilfully violated various of the conditions and covenants in said contract, and that you have executed the contract in bad faith; and therefore I do hereby exercise the power in me vested and notify you from this date to discontinue all work under said contract. And I hereby notify you that I shall, as authorized by said contract, have completed the work therein described, and that in case the expense of said completion shall exceed the sum which would have been payable under the contract had you faithfully kept and performed the same, I shall require you and your sureties to pay the amount of such excess to the city of Pittsburgh."

After the contractor was thus summarily ejected, at the instance of the city authorities, the Mercantile Trust Company completed the unfinished work. The contractor was not permitted to do any other work upon the reservoir from the date of the receipt of notice from the director, and after the completion of the work by the trust company, on August 9, 1901, the contractor instituted this action in the Circuit Court for the recovery of the retained percentages on the monthly estimates, and for extra work made necessary by reason of a change in plans and specifications. The city, as matter of defense, sets up in bar of the action two provisions of the contract, which may be designated as the final estimate provision and the arbitration clause. The first provided for a final estimate of the work, and the amount due the contractor after the completion of the work, and the second is a stipulation that the director of the department of public works shall be the final arbiter between the parties in all matters of dispute. The case was tried before Judge Acheson without a jury, in accordance with the

Digitized by Google

provisions of section 649, Rev. St. [U. S. Comp. St. 1901, p. 525]. After the plaintiff below closed its case, the court permitted the defendant to enter a general objection to all the plaintiff's evidence as incompetent and irrelevant, and as insufficient to enable the plaintiff to recover. The court permitted this general objection to be entered, with the understanding that counsel for defendant was subsequently to specify the reasons for the alleged inadmissibility of the evidence and apply to the court for a bill of exceptions. Under this general objection to the admission of all the evidence, the only provisions in the contract which the defendant below urged in bar of the plaintiff's action were the two provisions above referred to, to wit, the final estimate and the arbitration clauses, and the court held that, as the contractor had been put off the work before its completion, the ascertainment of the amount due him was not provided for by either clause, and the evidence was therefore admissible, and judgment was rendered in favor of the contractor. See Jonathan Clark & Sons Co. v. City of Pittsburg (C. C.) 146 Fed. 441.

The court below found as a fact that the items claimed were sufficiently proven by the evidence offered by the plaintiff below, which finding of fact is entitled to the same force and effect as a verdict of a jury; and the court further held, as a matter of law, that the provisions of the final estimate clause contemplated the completion of the work by the original contractor, and that they did not in terms apply to and are inappropriate to the extraordinary contingency of the party being put off the work and being prevented from completing it, in which event (section J of the contract, under which the plaintiff was put off the work) the plaintiff is entitled to recover what is justly due it for its materials and work, subject to specified charges and deductions on account of actual expense incurred by the city; and, further, that, as the city saw fit to act upon its right under clause J to put the plaintiff off the work, the arbitration clause, which provides for the determination of all disputes between the parties to the contract, could not be insisted upon for the ascertainment of the balance due the contractor, as clause J, under which the director was authorized to act and did act, impliedly provides for a determination of the rights of the parties by regular judicial proceedings, section J containing in terms no arbitration clause, and that an intention to oust the courts will not be presumed. The court entered judgment for the plaintiff's claim in the sum of $81,341.

There is ample evidence to sustain the facts found by the court below, and the construction put upon clauses in the contract which were before him upon the issues raised in the Circuit Court, we also think is correct. The errors assigned here, which raise these questions, are therefore overruled. But it is now sought to raise a new question under the contract, which was not brought to the attention of the trial judge nor passed upon by him, to wit, that the claim for extra work, which was allowed as part of the judgment rendered, cannot be sustained, for the reason that the evidence does not show that the clause in the contract providing for the recovery for extra work had been complied with, and therefore that part of the judgment allowed the plaintiff as extra compensation was error. As we have said, this ques-

Digitized by Google

tion was not called to the attention of the trial judge and was not passed upon by him, but it is urged that it is properly raised under the general objection to the irrelevancy and incompetency of all the evidence offered by the plaintiff. The trial judge, who was hearing the case by submission without a jury in order to save time, and the trouble of specifying objections to each question, permitted a general objection to be entered, giving counsel for the defendant the privilege thereafter to apply to the court for a bill of exceptions. This permission could certainly not have implied that there was to be nothing more than the general objection to the testimony as irrelevant and improper as tending to vary the terms of a written contract, without specifying what terms of the contract the testimony objected to varied, and making it a subject of special bill of exceptions. To permit this to be done would be unfair to the court below, where the testimony was objected to on the one ground and the objection urged in this court for an entirely different one, to which the attention of the court below was not called. This we do not think should be permitted.

The question as to whether the plaintiff had a right to offer evidence in support of a claim for extra compensation without first showing that he had complied with all the requirements of the clause in the contract providing for extra work was never raised before the trial judge by plea or proof or by directing the judge's attention to these provisions of the contract, and no exception was ever taken, and no error was ever assigned, to any ruling upon this point, because it was not passed upon in the court below, and it is therefore not properly before this court. In actions at law the function of this court is exclusively the correction of errors below. Questions which were not presented to or decided by that court are not open for review here, because the trial court cannot be guilty of error in a ruling he never made, upon an issue to which his attention was never called. Board of Com. of Lake County, Colo., v. Sutliff, 97 Fed. 270, 38 C. C. A. 167; Dahl v. Montana Copper Co., 132 U. S. 264, 10 Sup. Ct. 97, 33 L. Ed. 325; Morrison v. Watson, 154 U. S. 111, 14 Sup. Ct. 995, 38 L. Ed. 927; Trust Co. v. Hensey, 205 U. S. 298, 27 Sup. Ct. 535, 51 L. Ed. 811.

The court below having committed no error in its findings of fact and conclusions of law upon the matters of defense to which its attention was called and upon which it passed, we find that the judgment rendered by the court below in favor of the plaintiff should be affirmed, and it is so ordered.

(154 Fed. 467.)

In re DORAN.

MOORMAN v. BEARD.

(Circuit Court of Appeals, Sixth Circuit. June 15, 1907.)

Nos. 1,641, 1,645.

1. BANKRUPTCY—MODE OF REVIEW—ORDER DENYING PRIORITY OF CLAIM.

An order of a court of bankruptcy denying priority to a claim which has been allowed against an estate is one made in a controversy arising in a bankruptcy proceeding, and not one made in a bankruptcy proceeding,

Digitized by Google

and is reviewable by the Circuit Court of Appeals on appeal under Bankr. Act July 1, 1898, c. 541, § 25a, 30 Stat. 553 [U. S. Comp. St. 1901, p. 3432].

[Ed. Note.—Appeal and review in bankruptcy cases, see notes to In re Eggert, 43 C. C. A. 9.]

2. SAME—CHATTEL MORTGAGE—IDENTITY OF MORTGAGED PROPERTY.

A chattel mortgage given by a small retail merchant on his stock, containing no after-acquired property clause, cannot be enforced against stock on hand when he was adjudicated a bankrupt nearly a year and a half afterward, without proof that the goods were the same.

3. SAME—MORTGAGE—EFFECT OF WITHHOLDING FROM RECORD.

Under Ky. St. 1903, § 496, which provides that no mortgage shall be valid "against a purchaser for a valuable consideration without notice thereof or against creditors" until lodged for record, as construed by the state Court of Appeals a mortgage is valid against the general creditors of a bankrupt where it was recorded prior to the filing of the petition in bankruptcy, although it was withheld from record for several months, during which time a large part of the indebtedness was contracted.

Appeal from the District Court of the United States for the Western District of Kentucky.

For opinion below, see 148 Fed. 327.

C. L. Faurest, for Moorman.

Before LURTON, SEVERENS, and RICHARDS, Circuit Judges.

SEVERENS, Circuit Judge. The petitioner, Moorman, brings this matter here by petition for review and also by appeal, being doubtful, apparently, of the proper remedy. He filed a petition in the bankruptcy proceeding praying for the allowance of a claim for a debt of the bankrupt and for priority by reason of a mortgage given by the bankrupt securing it. Upon a hearing before the referee, his claim for the debt was allowed, but the priority claimed was disallowed. He applied for a review of the order disallowing priority to the District Judge, who affirmed the order of the referee. This left nothing in controversy but the question of the priority of the lien which the petitioner claimed under his mortgage. If the decision had been against his claim of debt, he could have brought the case here by appeal under section 25a, Bankr. Act of July 1, 1898, c. 541, 30 Stat. 553 [U. S. Comp. St. 1901, p. 3432], and its right to priority could have been settled if the debt was established, because the lien was a mere incident of the debt. This was so held by this court in Cunningham v. German Ins. Bank, 103 Fed. 932, 43 C. C. A. 377. But the claim for the debt having been allowed, only the incident remained, and that of itself was not sufficient to support an appeal under section 25a. The order was a decree in a controversy in a bankruptcy proceeding, and not an order in a bankruptcy proceeding proper, and therefore is not reviewable under section 24b. But we think the order of the District Court complained of may be reviewed under the authority of section 24a, which authorizes an appeal to this court, or a writ of error in controversies of this sort, in accordance with our decision in Re First National Bank of Canton, 135 Fed. 62, 67 C. C. A. 536. Such an appeal is one which is in conformity with appeals in other than bankruptcy cases.

Digitized by Google

The result is that we have before us an appeal in a cause in equity from a final decree—that is, final as to the particular controversy—and the scope of our inquiry includes the pleading and proofs in the court below. So far as the pleadings are concerned, they are in very crude shape. And so of the evidence, if it is distinguishable at all from the pleading. They consisted of the original affidavit of the petitioner in proof of his claim, including as exhibits the note and mortgage on which his claim was predicated. On this footing, and without further pleading, he went before the referee and asked for an order declaring the priority of his claim over those of the other creditors, and that he be paid out of the proceeds of the sales of the real and personal property remaining in the hands of the trustee the amount due him on his note and mortgage, the result of which would be that nothing would be left to other creditors after payment of the expenses of administration. The only thing which we find in the record indicating any pleading on the part of the trustee is the referee's statement that "at the time of the filing of said claim the trustee made oral objection to its allowance as a lien claim," and that, after the first hearing and before the denial of the petition for rehearing, the following objection was filed by the trustee to the proof of the claim:

"In the Matter of William H. Doran, Bankrupt. In Bankruptcy.

"The undersigned trustee, Morris H. Beard, respectfully submits and files objection to the allowance of the claim of Charles H. Moorman, filed herein and sought to be allowed as a lien claim, upon the following grounds:

"Because he is informed and believes to be true that the said Charles H. Moorman and the bankrupt, William H. Doran, at the time of the execution of the mortgage filed herein, entered into the following fraudulent agreement, with respect to the rights of the said bankrupt's creditors:

"That the said Charles H. Moorman agreed not to place the said mortgage upon record, in order to enable the said bankrupt to obtain further credit from his creditors, and not to impair otherwise said bankrupt's credit, by keeping concealed the existence of said mortgage; that in pursuance of said agreement the said Moorman did not place the said mortgage upon record from the date of its execution until the 8th day of May, A. D. 1906, which was but 10 days prior to the filing of the petition in bankruptcy by the said bankrupt, which was done on the 18th day of May, A. D. 1906.

"Wherefore said trustee for said reasons prays that said claim be rejected as a lien claim. M. H. Beard, Trustee."

We could disregard these informalities in the pleadings, for from the whole record we can understand the nature of the controversy. But when we come to look for the evidence, we are confronted with a more serious difficulty, for the first question is whether the petitioner made proof of such facts as would establish his right to a lien upon the property which came to the trustee. Notwithstanding the objection put upon the record by the trustee extended to only one defense, there was no admission of other facts which the petitioner was bound to prove. And the report of the referee shows that other grounds of defense were made at the hearing and considered by him. The rule in equity procedure is that where the allegations of the bill are not admitted by the answer the plaintiff must prove them. Young v. Grundy, 6 Cranch 51, 3 L. Ed. 149; Morris v. Morris, 5 Mich. 171; 2 Daniel's Ch. Pl. & Prac. (1st Am. Ed.) 973; 1 Bates, Fed. Eq. Proc. § 315.

Digitized by Google

The mortgage was given January 9, 1905. It covered certain real estate and a stock of goods belonging to the bankrupt, who was engaged in a mercantile business. The mortgage was recorded March 13, 1906. The mortgagor filed his petition in bankruptcy on May 18, 1906, which was therefore one year, four months, and nine days after giving the mortgage. The real estate subject to a homestead exemption was sold by the trustee for $150. The stock of goods which came to the trustee was sold by him for $620. The mortgage did not contain any after-acquired property clause. The referee reported that it did not "appear from the proof what, if any, part of the stock of goods, fixtures, etc., mentioned in the mortgage were still on hand at the time of filing the petition in bankruptcy, and that came to the hands of the trustee." And he further reported that the referee, subsequently to the original hearing, "suggested to the claimant that he would be given leave, if he desired to do so, to file amended proof showing what creditors, if any, had contracted their debts with knowledge of the existence of his said mortgage, and showing also what, if any, part of the goods on hand at the date of his said mortgage came into the hands of the trustee." "But," says the referee, "the claimant failed to offer such amended proof." Having regard to the nature of the business of the bankrupt, which was of a small retail dealer, and the amount of indebtedness which he incurred shortly after giving the mortgage as compared with the value of his stock when it was sold, we think it was incumbent on the mortgagee to prove what goods in stock on January 9, 1905, passed to the trustee on May 18, 1906, and that, in failing to make any proof on that subject, he failed to make good his claim to the proceeds of the stock of goods.

It sufficiently appears that the store and lot mentioned in the mortgage are the same real estate sold by the trustee on which he realized the sum of $150. And the second question is whether the petitioner, appellant, we will now call him, has established his right to claim a lien upon that. The mortgage in question was given January 9, 1905. It was recorded March 13, 1906. The petition in bankruptcy was filed May 18, 1906. The referee reports that, between the dates of the giving and the filing of the mortgage, the bankrupt created debts to the amount of $1,745.66. The Kentucky statute (section 496 of the Revision of 1903) declares that "no deed of trust or mortgage conveying a legal or equitable title to real or personal estate shall be valid against a purchaser for a valuable consideration, without notice thereof, or against creditors, until such deeds shall be acknowledged or proven according to law and lodged for record." And in the case entitled In re Ducker, 134 Fed. 43, 67 C. C. A. 117, we held in a case of a conditional sale, which in Kentucky is held to be a mortgage and subject to the recording law above quoted, that, when the instrument had never been recorded, creditors who had become such after giving the mortgage, and who were therefore in position at the time of the filing of the petition in bankruptcy to seize the property covered by the unfiled mortgage, might have their equity worked out for them by the trustee in the bankruptcy proceedings. Section 67a of the bankrupt act expressly provides that "claims which for want of record or for other reasons could not have been valid liens as

Digitized by Google

against the claims of the creditors of the bankrupt, shall not be liens against his estate"; and 67b, that "whenever a creditor is prevented from enforcing his rights as against a lien created or attempted to be created by his debtor, who afterwards becomes a bankrupt, the trustee of the estate of such bankrupt shall be subrogated to and may enforce such rights of such creditor for the benefit of the estate." By "prevented," as the word is here used, we understand prevented by the supervening of bankruptcy proceedings.

But it is contended by counsel for the appellant that the Court of Appeals of Kentucky has construed the statute regarding unfiled mortgages as meaning that, if the mortgagee shall have filed his mortgage before the creditor shall have fastened a lien upon the property by judicial proceedings, his mortgage becomes valid from its date. If the object of the statute is to prevent the creditor from being lured into giving the mortgagor credit upon the false appearance of ownership in the one who is about to become his debtor, it becomes practically useless for its purpose, and rather worse than that (for the creditor being directed by the statute to the record office, and finding nothing there, would naturally act upon the assumption that no such mortgage existed), if, after the mischief is done by the creditor's parting with his property, the mortgagee may close the trap by filing his mortgage. Upon such construction the statute, instead of protecting the creditor, is a device for defrauding him. The creditor would in most cases be unaware of his danger until all chance of remedy is gone. And, in the case before us, it would look as if that is what has happened.

In the case of a purchaser of the property for value, it seems to be recognized that the equity of the transaction itself is the governing factor, and the right of the purchaser is fastened when the mischief is done, and the subsequent recording of the mortgage does not defeat that right. But the construction of the statute is one for the courts of the state, and not for us. The decisions in Kentucky have not been uniform in regard to the effect of the statute in question, but we think it must be conceded they tend in the direction of applying it in the case of creditors to the conditions which exist when the remedy is sought, and relegate the question of right to the question of activity and diligence in prosecuting the remedy. Helm v. Logan's Heirs, 4 Bibb (Ky.) 78; Campbell v. Mosby, Litt. Sel. Cas. (Ky.) 358; Graham v. Samuel, 1 Dana (Ky.) 166; Morton v. Robards, 4 Dana (Ky.) 258; Righter v. Forester, 1 Bush (Ky.) 278; Low v. Blinco, 10 Bush (Ky.) 331; Baldwin v. Crow, 86 Ky. 679, 7 S. W. 146; Wicks v. McConnell, 102 Ky. 434, 43 S. W. 205.

In the case of York Mfg. Co. v. Cassell, 201 U. S. 344, 26 Sup. Ct. 481, 50 L. Ed. 782, the Supreme Court held that we were in error in supposing that the inchoate equity of creditors could be vindicated by the trustee in the court of bankruptcy, and reversed the judgment. That case is not precisely in point, because in the present case the mortgagee had recorded his mortgage before the petition in bankruptcy was filed, while in that case this had not been done. But the distinction is favorable to the appellant. The statutes of Ohio, where that case arose, and of Kentucky, are not identical, but so far as the

Digitized by Google

principal question is concerned they are not dissimilar. If in that case the equity of the creditors was lost by their failure to fasten it before the bankruptcy proceedings, so here they must fail for a like reason, and because the mortgagee had filed his mortgage and made himself secure before the petition in bankruptcy was filed.

It appears that it was claimed before the referee that the mortgage in question was void because it was withheld from record by agreement in order to give the mortgagor a false credit. But the referee in his report, although he recognized the presence of such an issue, ignored it for the reason that he put his decision upon another ground. It is to be regretted that this inquiry was not pursued. The keeping of both his mortgages from record for so long a time in the circumstances shown was calculated to excite suspicion. But as no evidence on this subject is reported, we have nothing but the bare fact of the failure to record, which, under the Kentucky decisions, is not of itself sufficient to justify a finding that there was an agreement between the parties to that effect.

The order of the court below will be modified so as to allow the appellant to recover the $150 realized by the trustee from the store and lot. The costs here will be equally divided.

(154 Fed. 290.)

BENKER v. MEYER et al.

(Circuit Court of Appeals, Eighth Circuit. May 7, 1907.)

No. 2,483.

1. APPEARANCE—WHAT CONSTITUTES—ADMINISTRATORS—INVOKING JURISDICTION OF FOREIGN COURT—CONCLUSIVENESS OF JUDGMENT.

   Under the statutes of Nebraska, which abolish the common-law writ of error, and provide for proceedings in the Supreme Court to review a judgment of a district court by the filing of a petition in error and the issuance and service of a summons thereon, such proceedings are in effect an original action, and a foreign administrator who avails himself of the right given him by the statutes of the state to sue in its courts by instituting such a proceeding in error to review a judgment of a district court subjecting lands of his intestate to an attachment voluntarily submits the question of the validity of such judgment to the Supreme Court of the state, and its decision is binding upon him and upon the property.

   [Ed. Note.—For cases in point, see Cent. Dig. vol. 3, Appearance, § 41.]

2. JUDGMENT—PERSONS CONCLUDED—GENERAL AND ANCILLARY ADMINISTRATORS.

   A judgment of a state court against a foreign administrator, subjecting land of his intestate's estate to an attachment, which is conclusive as against him, is also conclusive as against a local administrator subsequently appointed, and a bar to an action brought by him to recover the land from a purchaser under the former judgment in which the same issues only are involved.

In Error to the Circuit Court of the United States for the District of Nebraska.

This was a suit in ejectment to recover possession of land in Nebraska. The defendants justified their possession under certain attachment proceedings in the courts of Nebraska and a purchase of the land by them at a

Digitized by Google

judicial sale made therein. They were creditors of one Petterson, a resident of South Dakota, who owned the Nebraska land. They instituted a suit by attachment against him in the district court of Cedar county, Neb., and levied on the land. Before process had been served on him Petterson died. Afterwards an administrator of his estate was duly appointed in South Dakota, and not elsewhere, and defendants, who were plaintiffs in that suit, secured a conditional order of revivor of the action against the administrator and an order of publication against him. Pursuant to the requirement of that order the foreign administrator, whose name was Gutterson, appeared and ineffectually moved to discharge and dissolve the attachment, suffered judgment by default to go against him in his representative capacity for the debt and an order to be made requiring the land to be sold to satisfy the judgment, moved to set aside the default and for leave to defend, and prosecuted a petition in error from an order denying that motion to the Supreme Court of Nebraska where the judgment of the district court was affirmed. In all these proceedings the fact appeared by the pleadings that Gutterson was a foreign administrator appointed in South Dakota only and in no stage of the case did he make any objection to the jurisdiction of the court by reason of that fact. The plaintiffs in that suit purchased the land under the order of sale therein made and after the affirmance of their judgment by the Supreme Court the present plaintiff, Benker, was appointed administrator of Petterson's estate in Cedar county, Neb., and brought this suit in ejectment against the defendants to recover the land so purchased by them, on the ground that the proceedings and judgment in the attachment suit were without jurisdiction and void. The foregoing facts appearing, the court below directed a verdict and rendered a judgment in favor of the defendants. To secure a reversal of that judgment this writ of error is prosecuted by the plaintiff.

Robert B. Tripp (J. C. Robinson, Robert J. Gamble, and John Holman, on the brief), for plaintiff in error.

Henry C. Gardiner (Rich, Searle & Clapp, on the brief), for defendants in error.

Before SANBORN, HOOK, and ADAMS, Circuit Judges.

ADAMS, Circuit Judge, after stating the case, delivered the opinion of the court.

Counsel in the presentation of this case have narrowed the question to this: Whether the district court of Cedar county, Neb., originally acquired jurisdiction over the foreign administrator appointed in South Dakota or whether that administrator by his voluntary appearance or subsequent affirmative action in that court and in the Supreme Court of Nebraska in the same case subjected himself to the jurisdiction of the Nebraska court, and whether, if that court acquired jurisdiction in either way, its judgment is res adjudicata of the question now before us.

An administrator is generally answerable only to the courts of his own state, and cannot, in the absence of statutory authority, be sued in a foreign jurisdiction. Vaughan v. Northup, 15 Pet. 1, 10 L. Ed. 639; Mellus v. Thompson, 1 Cliff. (U. S.) 125, Fed. Cas. No. 9,405; Lewis v. Parrish, 53 C. C. A. 77, 115 Fed. 285; Burton v. Williams, 63 Neb. 431, 88 N. W. 765. Whatever power or authority an administrator may exercise outside of the state of his appointment "is a mere matter of comity, which every other state is at liberty to accord or withhold according to the policy of its own laws and with reference to the interests of its own citizens." Cases supra.

Digitized by Google

How does this case stand when viewed in the light of these accepted principles? The nonresidence of Petterson, the owner of the land in question, subjected it to attachment at the suit of his creditors (Comp. St. Neb. 1901, § 5762), and service of summons by publication was sufficient (section 5669). Jurisdiction of the court and power to control all subsequent proceedings was acquired immediately upon the issuing of the order of attachment. Section 5797, supra. Petterson's death before the service of process did not affect the jurisdiction of the court so acquired, but "full control of all subsequent proceedings" under the attachment laws of Nebraska was expressly conferred upon the court notwithstanding such death. Section 5979, supra. By reason, doubtless, of the contingent liability of real estate for the debts of the deceased the statute requires that where such real estate as well as where personal property is attached, in the event of the death of the defendant at any time after issuing the order of attachment, the proceedings shall not abate, but shall be carried on, and "his legal representatives shall be made parties to the action." Section 5797, supra. The revival of an action against the personal representatives of a decedent by a conditional order to be served when such representatives are nonresidents of the state by publication is provided for. Sections 6037–6041, supra. Pursuing the course marked out by the foregoing statutes, an order of revivor was made against Gutterson, the foreign administrator of Petterson's estate, and he appeared to the action and conducted the unsuccessful defense stated. The learned trial court held that the revivor so made against the foreign administrator was fairly contemplated and authorized by the general language of sections 5797 and 6038, which provide that the "legal representatives," without discriminating between domestic and foreign, shall be made parties to an action by revivor; and he cites in support the case of Brown v. Brown, 35 Minn. 191, 28 N. W. 238, where under a similar statute that view is approved. He also called attention to section 6041, supra, relative to reviving actions against representatives of a deceased defendant, where notice by publication is expressly provided for against a "nonresident of the state" and to other provisions of the statutes whereby power is conferred upon foreign administrators to commence and prosecute suits in Nebraska and to sell real estate therein belonging to the estate of the deceased. From a consideration of these things he held that the state has adopted such a policy of comity towards foreign administrators by admitting them into the state for so many kindred purposes that reasonableness and consistency both unite in the conclusion that the Legislature of the state by sections 5797 and 6038, supra, intended by the use of the general terms "legal representatives" and "representatives," therein employed without discriminating between domestic and foreign, to include any personal representative of the deceased wherever constituted and render them liable to proceedings to revive an action. There is much force in that reasoning, but, as the Supreme Court of Nebraska has not construed the statute in question, and as we find other satisfactory grounds for our conclusion, we deem it inadvisable to anticipate that court in construing its local laws.

Digitized by Google

The facts of this case show that Gutterson, the former administrator, after service of process had been made upon him in the proceedings to revive the action, appeared and moved to discharge the attachment levied upon the real estate in question. He availed himself of the provisions of section 5800, supra, and filed an unsuccessful motion "to set aside the order allowing the attachment and to discharge the attachment and levy." He then filed what is called an "answer and separate defense." By those proceedings he raised some issues of fact and two questions of law: (1) Whether the attachment was void for want of a preliminary bond given by the attachment creditors; and (2) whether a revivor of the suit was lawful in the absence of a service of summons upon the defendant before his death. These questions were decided against him and properly so. Brown v. Brown, and section 5797, supra. There being no further pleading by defendant, judgment by default was rendered against him, and the land was sold to satisfy the judgment. Six months thereafter the administrator again appeared and moved the court to set aside the default and grant him leave to appear and defend the action. That motion was denied, and Gutterson prosecuted a petition in error from the Supreme Court of Nebraska to secure a reversal of the order so made. Full hearing was had in the Supreme Court, and the order and judgment of the district court were affirmed.

The question now is whether the foreign administrator by the foregoing proceedings subjected himself to the jurisdiction of the Nebraska courts.

Section 2838, Comp. St. 1901, supra, is as follows:

"An executor or administrator duly appointed in any other state or county may commence and prosecute any action or suit in any court in this state in his capacity as executor or administrator in like manner and under like restrictions as a non-resident may be permitted to do so, provided that in case any executor or administrator shall have been appointed in this state such person only shall be entitled to commence and prosecute actions or suits within this state in his capacity as such executor or administrator."

A statute similar was under consideration by the Supreme Court of the United States in Lawrence v. Nelson, 143 U. S. 215, 12 Sup. Ct. 440, 36 L. Ed. 130. In that case the facts, briefly stated, are that Nelson and French brought a suit in equity in the Circuit Court of the United States in Arkansas against the executor of the estate of one Ballentine, their deceased copartner, for a settlement of the partnership accounts. The executor soon after was removed and Lawrence, who had been appointed administrator c. t. a. by the county court of Cook county, Ill., the domicile of Ballentine, was substituted as defendant, and he thereafter appeared and conducted the defense for the estate of Ballentine. A decree was rendered in favor of complainants for their respective shares in the partnership received and held by Ballentine in his lifetime, and requiring Lawrence as administrator to pay the same out of the unadministered assets in his hands. The administrator filed a motion for rehearing, and later filed in the same court a bill of review, alleging, among other things, that on the face of the record it appeared that he was a foreign administrator, and not appointed by any court of Arkansas, and for that reason could not be

Digitized by Google

sued in that state. That bill was heard and dismissed upon its merits. Afterwards Nelson and French brought their action on the Arkansas judgment in the Circuit Court of the United States in Illinois against the domiciliary administrator to charge him as such with the payment of the Arkansas judgment. The Supreme Court, in reviewing a decree rendered for the complainants in that case, recognized the general rule limiting the administrator's power to act and liability to account to the state appointing him and disqualifying him to sue or be sued in any other state than that in which he was appointed, but gave force and effect to section 4473 of the Statutes of Arkansas (Digest of 1874), which provided that:

"Administrators and executors appointed in any of the states, territories or districts of the United States under the laws thereof, may sue in any of the courts of the state, in their representative capacity, to the same and like effect as if such administrators and executors had been qualified under the laws of this state."

The question considered was whether the administrator in that case was brought within the remedial legislation permitting a foreign administrator to sue in the courts of Arkansas. The court there held that by filing the bill of review to have the original decree set aside because it should not have been rendered against the Illinois administrator "he became himself the actor, and submitted that question to a court of competent jurisdiction, and its decision upon that question, whether favorable or adverse to him, was equally conclusive of the matter adjudged." The court further said:

"Whatever doubt may have existed as to the validity of the former decree, as binding the assets of the deceased in the hands of the administrator before the decree upon the bill of review, is removed by the latter decree; and, by the effect of this decree, the former decree must be treated, for the purposes of this case, as a judgment rendered by a federal court of competent jurisdiction and binding the assets of his intestate in his hands, just as if it had been rendered in a federal court held in the state of Illinois."

By the statutes of Nebraska writs of error as known at common-law are abolished (section 6194, Comp. St., supra), and an elaborate scheme is provided for instituting a proceeding for reversing a judgment once rendered as follows:

"A judgment rendered or final order made by the district court may be reversed, vacated or modified by the Supreme Court for errors appearing on the record." Section 6174, supra.

"The proceedings to obtain such reversal, vacation or modification shall be by petition entitled 'petition in error' filed in a court having power to make such reversal, vacation or modification, setting forth the errors complained of, and thereupon a summons shall issue and be served or publication made as in the commencement of an action. A service on the attorney of record in the original case shall be sufficient. The summons shall notify the adverse party that a petition in error has been filed in a certain case, naming it, and shall be returnable on or before the first day of the next term of court, if issued in vacation, and twenty days before the commencement of the term; if issued in term time, or within twenty days before the commencement of the term, it shall be returnable on a day named in said summons." Section 6175.

The bill of review considered in the Lawrence Case was a proceeding addressed to the court which rendered the first decree to secure its

Digitized by Google

reversal. Such a bill, as recently said by this court in Quinton v. Neville, Adm'r (C. C. A.) 152 Fed. 879,[1] has a limited scope. The petition in error involved in the present case is a proceeding to accomplish the same purpose as the bill of review of the Lawrence Case and has a much broader scope. The difference between the two resides in the fact that the latter is addressed to a superior appellate tribunal, while the former is addressed to the court which rendered the decree assailed. If in prosecuting the bill of review in that case the foreign administrator became the actor within the meaning of the Arkansas statutes, and voluntarily submitted the question involved to the court for its adjudication, much more did the foreign administrator in this case become the actor and voluntarily submit to the Nebraska courts the question therein involved. It is true a writ of error at common law is regarded by the federal courts as a continuance of the original action, rather than the commencement of a new proceeding. Cohens v. Virginia, 6 Wheat. 410, 5 L. Ed. 257; Nations v. Johnson, 24 How. 204, 16 L. Ed. 628. But that rule cannot prevail in the courts of the state of Nebraska where the common-law writ of error is abolished by statute (Comp. St. 1903, § 6194), and where a new proceeding, characterized by all the features of an original proceeding instituted in a trial court, is substituted for it. Gutterson by his course of procedure in the courts of Nebraska subjected himself as administrator of Petterson's estate to the jurisdiction of those courts. He never questioned that jurisdiction because of the fact that he was a foreign administrator, and to say nothing of the effect of his general appearance and action taken to defeat the attachment on the law and facts of the case and to the contention of counsel that he thereby, under Nebraska decisions, effectually submitted himself to the general jurisdiction of the court, we content ourselves by observing that he voluntarily took the initiative and became the actor in an independent proceeding to secure a reversal of the judgment rendered against him, and as a result of that action the order and judgment of the lower court were approved and affirmed. Paraphrasing the language of the Supreme Court in the Lawrence Case, whatever doubt may have existed as to the validity of the former judgment as binding the assets of the deceased in the hands of the administrator before the judgment upon the petition in error is removed by the latter judgment; and by the effect of this judgment the former judgment must be treated for the purposes of this case as a judgment rendered by a court of competent jurisdiction and binding the assets of his intestate in his hands just as if it had been rendered in a court held in the state of South Dakota.

The other question, whether the judgment in the first case is res adjudicata of the question now before us, admits of little debate when the jurisdiction of the courts which rendered the first judgment is established. The subject-matter or claim and demand litigated in both cases was the same. The creditors' demand sued on was not challenged in either case. The only question in both was whether Petterson's land in Nebraska was liable to attachment at the suit of his creditors when no administrator had been appointed in that state. The parties were the same; the plaintiffs in the first case were defendants in the second; the representative of Petterson's creditors was de-

[1] 81 C. C. A. 673.

Digitized by Google

fendant in the first case and plaintiff in the second. They were different persons and appointed by courts of different states, but had the same representative character, and, in fact, as shown by this record, represented exactly the same creditors. The question actually litigated in the first case was the same as that litigated in the second, namely, whether Petterson's land in Nebraska was subject to attachment at the suit of his creditors instituted to recover their debt. Accordingly in any aspect of the rules laid down in the leading case of Cromwell v. County of Sac, 94 U. S. 351, 24 L. Ed. 195, and the many subsequent cases following and affirming the doctrine of that case, there is no doubt that the plaintiff below is estopped by the former judgment from again litigating the very question therein litigated. This last question is foreclosed by the Lawrence Case, where, on facts substantially like those now under consideration so far as our present inquiry is concerned, the first judgment was held conclusive.

We have now disposed of all questions claiming our attention, and, finding no error, the judgment of the Circuit Court is affirmed.

(154 Fed. 182.)

THE MAUCH CHUNK.

(Circuit Court of Appeals, Second Circuit. April 30, 1907.)

No. 205.

1. COLLISION—ADHERENCE TO RULES—DISREGARD OF SPECIAL CIRCUMSTANCES.
   A perverse adherence to the navigation rules is not justifiable, where it is manifest that such course is certain to result in danger of collision.
   [Ed. Note.—For cases in point, see Cent. Dig. vol. 10, Collision, § 224.]

2. SAME—FERRYBOATS CROSSING—VESSEL LEAVING SLIP.
   The ferryboat Northfield left her slip on the west side of pier 1, East river, at her usual time, as the Mauch Chunk, another ferryboat, was approaching from her starboard side to enter her own slip beyond. The Northfield gave her starting signal, and then a signal of two whistles, and was proceeding across the bow of the Mauch Chunk, when she was struck by the latter and sunk. It was in the daytime, and the vessels were in full view of each other, and each also knew the arriving and leaving time of the other. The Mauch Chunk had no lookout, and did not hear the starting signal of the Northfield, nor observe that she had started until within 600 or 700 feet, when the crossing signal was heard. There was a strong flood tide, which prevented the Northfield from going further to starboard than she did, and she was only about 75 feet beyond the end of the pier when the collision occurred. *Held* that, while the Northfield was clearly in fault in not remaining in her slip until the Mauch Chunk had passed, and in attempting to cross in the bow of the latter vessel in violation of the starboard hand rule, the Mauch Chunk was also in fault for failure to keep an efficient lookout and for insistence on the privilege given her by such rule, in disregard of the surrounding circumstances, after it was manifest that departure therefrom could alone prevent collision.
   [Ed. Note.—For cases in point, see Cent. Dig. vol. 10, Collision, §§ 203-205.]
   Lacombe, Circuit Judge, dissenting.

Appeal from the District Court of the United States for the Southern District of New York.

This cause comes here upon appeals from the final decree of the District Court for the Southern District of New York entered December 21, 1905, which held both ferryboats Mauch Chunk and Northfield in fault for a col-

Digitized by Google

lision between them, limited the liability of the respective owners, and distributed the proceeds. The Northfield was bound out from her slip which lies on the west side of a long pier, on the east side of which lies the slip for which the Mauch Chunk was bound. On June 14, 1901, about 6 p. m. the Northfield cast off, sounded slip whistle and started under one bell. At that time the Mauch Chunk was in full view from the forward pilot house and on the starboard hand of the Northfield. When the latter boat had moved down her slip, about 30 to 40 feet, she blew a two-blast signal and rang a jingle bell; by this time she was about 75 feet from the bridge. Subsequently she blew another two-blast signal and continued on, crossing the course by which the Mauch Chunk was approaching her own slip. While so doing she was struck by the Mauch Chunk.

The opinion of the district judge is reported in 124 Fed. 786. The opinion confirming the report of the commissioner is reported in 139 Fed. 747.

Edward Grenville Benedict and George Holmes, for the Mauch Chunk.

Frederick M. Brown and Howard S. Harrington, for the Northfield.

J. Parker Kirlin and Eliot Tuckerman, for appellees.

Before LACOMBE, TOWNSEND, and COXE, Circuit Judges.

COXE, Circuit Judge. The majority of the court is of the opinion that the decree of the District Court is right and should be affirmed. As the cause received the most careful attention in the District Court both at the hands of the judge and the commissioner we would be entirely content to affirm on their opinions were it not for the fact that, though agreeing on all the other questions debated, we are not in accord as to the navigation of the Mauch Chunk. This situation makes it proper that we should state the reasons which lead us to hold the Mauch Chunk in fault.

The collision occurred in broad daylight with nothing to interfere with free navigation. The slips of the Northfield and Mauch Chunk were adjoining, being separated only by pier 1. The master of each vessel knew, or should have known, the custom of the other as to the hours of arrival and departure and the time required to make the trips between New York and St. George and Communipaw, respectively. From the forward pilot house of the Northfield the Mauch Chunk was seen as she left her slip on the New Jersey side of the river, and of course, the forward portion of the Northfield could have been seen from the Mauch Chunk had her navigators looked in that direction, which was straight ahead. They knew that it was the scheduled time for the Northfield to leave her slip, that she was liable to start at any moment and they knew also that they could not make their own slip without crossing the course of the Northfield. In short, many of the facts essential to make navigation safe were already known to the master of the Mauch Chunk and it was only necessary for him to keep his eyes and ears open to ascertain the remaining facts.

It is not an unfair presumption, when a collision occurs on a bright, clear day with nothing abnormal in the elements and no other craft in the vicinity to complicate necessary maneuvers, that the collision is the result of negligence or crass stubbornness, and stubbornness is often another name for negligence. The navigation rules (Act Aug. 19, 1890, c. 802, 26 Stat. 327 [U. S. Comp. St. 1901, p. 2871]) are enacted to prevent collisions, not to induce them. A perverse ad-

Digitized by Google

herence to the rules is not justifiable when it is manifest that such a course is certain to result in disaster. Article 27 provides that:

"In obeying and construing these rules due regard shall be had to all dangers of navigation and collision, and to any special circumstances which may render a departure from the above rules necessary in order to avoid immediate danger."

And article 29 provides that nothing in the rules shall exonerate any vessel or the master or crew thereof from the consequences of any neglect to keep a proper lookout or of any precaution which may be required by the ordinary practice of seamen, or by the special circumstances of the case.

The Supreme Court says:

"Errors committed by one of two vessels approaching each other from opposite directions do not excuse the other from adopting every proper precaution required by the special circumstances of the case to prevent collision, as the act of Congress provides that * * * due regard must be had to the special circumstances rendering a departure from them [the rules] necessary in order to avoid immediate danger." The Marie Martin, 12 Wall. 31, 47, 20 L. Ed. 251.

Again the court says:

"Rules of navigation are ordained to preserve life, and property and not to promote or authorize collision. Even flagrant fault committed by one of two vessels approaching each other from opposite directions will not excuse the other from adopting every proper precaution to prevent a collision." The America, 92 U. S. 432, 438, 23 L. Ed. 724.

The contention that the starboard hand rule was applicable the moment the Northfield moved away from her bridge is not vigorously disputed. There can be no doubt that under the rule she was the burdened vessel and was commanded to keep out of the way of the Mauch Chunk which was required to keep her course and speed. The importance of strict adherence to this rule is universally recognized in this country and the reasons therefor are obvious; but that there are exceptions to the rule, repeatedly recognized by the courts, cannot be controverted. Even in The Delaware, 161 U. S. 459, 16 Sup. Ct. 516, 40 L. Ed. 771, where the rule was rigidly maintained, the court, at page 468 of 161 U. S., and page 521 of 16 Sup. Ct., says:

"The weight of English, and, perhaps, of American authorities, is to the effect that, if the master of the preferred steamer has any reason to believe that the other will not take measures to keep out of her way, he may treat this as a 'special circumstance' under rule 24 [Act April 29, 1864, c. 69, 13 Stat. 61 (U. S. Comp. St. 1901, p. 2899)], 'rendering departure' from the rules 'necessary to avoid immediate danger.' Some even go so far as to hold it the duty of the preferred vessel to stop and reverse, when a continuance upon her course involves an apparent danger of collision. * * * The cases of The Britannia, 153 U. S. 130, 14 Sup. Ct. 795, 38 L. Ed. 660, and The Northfield, 154 U. S. 629, 14 Sup. Ct. 1184, 24 L. Ed. 680, must be regarded, however, as settling the law that the preferred steamer will not be held in fault for maintaining her course and speed, so long as it is possible for the other to avoid her by porting, at least in the absence of some distinct indication that she is about to fail in her duty."

We think the "special circumstances," recognized by all the authorities as requiring a departure from the rule, have been established by the proof in the case at bar.

Digitized by Google

The district judge found the Mauch Chunk guilty of fault in the following particulars:

First. In failing to keep a good lookout.

Second. In failing to hear the warning signal of the Northfield.

Third. In failing to see that the Northfield had started from her slip until she was about 75 feet from her bridge.

Fourth. In failing to give the Northfield a timely signal that she intended to cross the Northfield's bow.

Fifth. In failing to reverse immediately when it became apparent that the Northfield was attempting to cross her bows.

An examination of the testimony satisfies us that the master of the Mauch Chunk, having convinced himself that the starboard hand rule was an all-sufficient panoply, determined to adhere to it blindly even though human life and property might be saved by a slight departure. Notwithstanding the fact that the bow of the Northfield was in full view all the way across, and dead ahead, he testifies he "didn't notice her." Although the Northfield had sounded one long warning signal that she was about to start on her trip he did not hear it. He was asked:

"Question. What first called your attention to the Northfield? Answer. Two whistles—two short whistles.

"Question. And then did you look at her? Answer. Yes, sir."

He says that when he first saw the Northfield he was about abreast of the Staten Island slip, with his bow very nearly on a line drawn through the center of the Northfield's slip and about 320 feet out. (The district judge finds it was 700 feet). Up to that time he had not slowed the Mauch Chunk's engine and was proceeding at the rate of about 12 miles an hour. He had thus, on his own testimony, proceeded at full speed to within 320 feet of the Northfield before seeing her. He was undoubtedly correct in saying "I didn't have room to stop." How can the court hold that there was no negligence on the part of the Mauch Chunk in running blindly into a position from which it was impossible to extricate herself without collision? Can it be said that, had she heard the long starting blast, which it was her duty to hear, or had she seen the Northfield moving out, which maneuver it was her duty to see, she would still have been justified in keeping on at full speed headed for the end of the Northfield's port rack?

If this were the case of a collision occurring in open water a different rule would obtain, but here the special circumstances must be considered. A strong flood tide was running up the river, crowding the Northfield against pier 1 and making it impossible for her to proceed in an easterly direction until her stern had fully cleared the end of the pier. She could not have avoided the Mauch Chunk by porting because her helm was hard aport (with the wheel fastened in a becket) to overcome as much as possible the force of the tide. All this the master of the Mauch Chunk knew or should have known, for he had the same means of knowledge as the master of the Northfield. Enough had occurred to convince a prudent navigator that the Northfield intended to cross his bows—he should have acted accordingly.

Digitized by Google

The finding that the Mauch Chunk was at fault in failing to keep a competent lookout is amply supported by the testimony; indeed, no other proof is needed beyond the fact that no one of her crew saw the Northfield. That they did not do so seems incredible, when it is remembered that the atmosphere was clear and they were steering for the pier against which she lay. We think the books will be searched in vain for an authority holding a vessel blameless under the starboard hand rule when it appears from her own admission that her navigators did not see the burdened vessel or hear her signals until she was but 300 feet distant. If the Mauch Chunk had heard the warning signal and immediately afterwards had seen the Northfield moving from her slip it would have been notice to the Mauch Chunk that the Northfield had begun her journey to Staten Island which was due to commence at that time.

The theory that the starting signal followed by the actual start was notice only that the Northfield intended to proceed a short distance and stop, is ingenious but not persuasive. Not only was it notice of the beginning of the 6 o'clock trip of the Northfield, but the Mauch Chunk should have known that the Northfield was compelled to go straight out from her slip before she could turn either to starboard or port. In this respect it was as if her starboard rack extended as far out as pier 1.

With a tidal current of 3½ miles running across the mouth of the slip it is doubtful if the Northfield could have avoided collision if the Mauch Chunk kept on even if she had succeeded in getting well clear of the slip. In these circumstances we fail to see how it can be said that the negligence, which is hardly disputed, in failing to hear the signal and see the initial moving out of the Northfield, is not material in determining the liability of the Mauch Chunk. But for this neglect she would have known in time to have prevented the collision that the Northfield had signified her intention to cross the Mauch Chunk's bow and that this could probably not be done without great danger, there being no room for the Northfield to maneuver. The Mauch Chunk had no right to assume that the Northfield would keep out of the way after the latter had indicated a course, and was proceeding to follow it, which necessarily brought her directly in the way. In such circumstances the duty of the Mauch Chunk was clear. She should have stopped and reversed or at least slackened speed until she was well in hand. After such knowledge, to keep on at full speed was simply to invite disaster.

It is said in the brief for the Mauch Chunk that she struck the Northfield's starboard side "lightly" with her bow, but the proof indicates that the blow was of sufficient violence to cut the Northfield down to the turn of the bilge and penetrate her hull six or eight feet at a distance of five or six feet below the water line, causing her to sink within 10 or 15 minutes thereafter. When it is remembered that this blow was delivered not by the sharp stem of a yacht, but by a blunt-nosed ferryboat it is manifest that she must have been under considerable momentum at the time. Had the Mauch Chunk seen the initial movement of the Northfield and had she then reversed it is probable that the collision would not have occurred. In any view

Digitized by Google

the impact would have been so slight that the deplorable consequences of the collision would have been avoided.

If the starboard hand rule is to be strictly construed against the Northfield it should be construed with equal strictness against the Mauch Chunk, and, as pointed out by the Judge, she was not navigating in conformity with its provisions. She changed her course after the Northfield started from her bridge when, had she continued her original course, collision would have been impossible.

Other faults are pointed out in the briefs and the opinion which we deem it unnecessary to discuss as we are convinced that the fundamental fault was her reckless disregard of surrounding circumstances, her failure to see and hear what was plain and obvious, and her blind and obstinate insistence upon the rule after it was manifest that departure therefrom could alone prevent disaster.

We have considered the case upon the supposition that the starboard hand rule became applicable the moment the Northfield left her bridge, for the reason that the majority of the court is of this opinion and the proposition has not been very vigorously controverted, either at the argument or on the briefs. The writer is not, however, entirely satisfied that the proposition is correct. He thinks there is force in the suggestion that a steering and sailing rule should not apply to a vessel hampered as was the Northfield. Her movements were as circumscribed as if she was moving out of a dry dock. She could stay where she was or she could move straight out; she had no other course open to her. It would seem that the rule should not apply in such circumstances until the vessel is clear of her slip and able to direct her course to port or starboard as the exigencies of the situation may require. Article 18, rule 5 (Act June 7, 1897, c. 4, 30 Stat. 101 [U. S. Comp. St. 2882]), recognizes this distinction as follows:

"When steam vessels are moved from their docks or berths, and other boats are liable to pass from any direction toward them, they shall give the same signal as in the case of vessels meeting at a bend, but immediately after clearing the berths, so as to be in full sight, they shall be governed by the steering and sailing rules."

We are unanimously of the opinion that the District Court was right in holding that the claim of the owner of the Northfield is subordinate to the other claims, including the death claims, under the authority of The Catskill (D. C.) 95 Fed. 700, which we approve.

The decree is affirmed with interest and costs.

LACOMBE, Circuit Judge (dissenting). I concur with the majority of the court in the finding that the Northfield was guilty of a gross violation of the starboard hand rule. That is sufficient to condemn her, without discussing further charges of fault, unless it is in some way excused. The only excuse offered is that to her first two-blast signal the Mauch Chunk at once answered with a like signal, being at the time 800 or 900 feet distant. The district judge finds that the distance was about 700 feet. If this were so, it might or might not be found that the Northfield was free from fault for proposing to cross the bows of the approaching vessel; but the difficulty with the excuse, so far as this court is concerned, is that the assertion

Digitized by Google

on which it is based is not proved. The evidence as to whether the Mauch Chunk did or did not at any time sound a two-blast signal is most conflicting. There is no clear preponderance either way. On each side of the controversy are witnesses whose situation was such that they must have known the truth, and some of whom must have knowingly testified falsely. On each side are witnesses wholly without interest in the litigation, but whose situation was not such as to make their recollection of much value. The district judge heard and saw most of the important witnesses. He has found that the Mauch Chunk did not by two-blast signal assent to the proposed maneuver of the Northfield, and upon the testimony as it is presented here in the printed record there is not sufficient to warrant a reversal of that finding.

I am unable, however, to agree with the majority of the court as to the liability of the Mauch Chunk. The fundamental fault charged against her was that, after agreeing, by sounding a two-blast signal, to allow the Northfield to cross her bows, she failed to navigate accordingly. But, since this court is unanimously of the opinion that the finding of the district judge as to her signals must be sustained, that charge must be dismissed.

The next inquiry is as to lookout. She had a man stationed on the main deck for that purpose, and the second man in the pilot house, having nothing to do with the wheel (she steers by steam), was free to give his undivided attention to the same purpose. It makes no difference, however, whether she had two or half a dozen stationed lookouts. The real question is whether they were vigilant to note what they should have seen and heard. The Northfield was in full view. She lay at the pier to which the Mauch Chunk was bound, and was known to be a ferryboat likely soon to leave her slip. Certainly her movements should have been observed and reported by a lookout who was careful and vigilant. It is undisputed that her slip whistle was not heard, nor was her forward movement observed intermediate her casting off and the blowing of her first two-blast signal. The weight of the evidence leads to the conclusion that the attention of those on the Mauch Chunk was attracted by the first two-blast signal. Such seems to be the finding of the district judge, and, indeed, the Northfield's own navigators assert that the Mauch Chunk answered it; the only conflict upon the testimony being whether that answer was a two-blast or an alarm whistle. It must be concluded that the lookouts on the Northfield were not vigilant and attentive to their duties in failing to observe the slip whistle and first forward movement from the bridge. But that finding does not determine the question as to the Mauch Chunk's liability. The most that can be claimed is that the navigation of her master—wheel, whistles, and engine room bells—must be judged precisely as if, at the very moment that the slip whistle began to sound, his attention was called to the Northfield, and all her subsequent movements and signals promptly observed.

Tested in this way, was the navigation of the Mauch Chunk's master faulty? The mere fact that the Northfield had sounded a slip whistle and moved some 30 feet down her slip, but not at all beyond her rack, so as to enable a navigator in her forward pilot house to

Digitized by Google

look both to port and starboard before beginning his navigation, was not a declaration of intention to begin navigation by disregarding the fundamental rule for crossing vessels, in the face of a vessel approaching rapidly on her starboard hand. At 30 feet from her bridge she still lay against the easterly rack of her slip, and, since the westerly rack was a short one, the four-mile tide held her pressed against the rack in a perfectly safe position until her pilot might decide to begin navigation. Rule 5. It has been frequently held that the navigator of a moving vessel is entitled to assume that the vessels he meets will themselves navigate in conformity with the rules until something occurs to indicate that they intend to violate them. The Delaware, 161 U. S. 468, 16 Sup. Ct. 516, 40 L. Ed. 771. I fail to see that there was anything to indicate such an intention on the part of the Northfield until her first two-blast signal was sounded. The witnesses from the Mauch Chunk testify that thereupon she at once rang to her engine room to reverse full speed and sounded an alarm whistle signal. I do not find in the other testimony sufficient to discredit that statement, and do not understand that the district judge has found that she failed to reverse promptly upon hearing the two-blast signal. What he does hold is that she should have reversed when the slip signal was sounded. She continued under reversed engines until collision, but with the four-mile tide the distance (700 feet, as the district judge finds) was not sufficient to stop her headway. In the position thus suddenly thrust upon her I am unable to see what else she could have done than sound alarm and reverse full speed. Had she given a three-whistle signal on top of the alarm, it would have produced no effect upon the situation. The Northfield kept on in the teeth of an alarm blast. She would undoubtedly have done the same on hearing a signal which, by promising reversed engines, might seem to indicate that the perilous maneuver she had begun might be helped out by the co-operation of the other vessel. I do not understand that the rules require that a vessel having the right of way must blow a single whistle to every vessel she sees in a slip ahead on her port hand, before such vessel has herself announced what her own navigation is about to be. Certainly rule 2 does not so provide, nor does rule 3.

The so-called "ferryboat decisions" are not helpful here. Both the colliding vessels were ferryboats, bound, respectively, in and out of slips which were located within 70 feet of each other. The Mauch Chunk was as much entitled to an unembarrassed entry into her slip as the Northfield was to an unembarrassed exit from hers. Indeed, it would seem to be a more difficult operation to make the turn into one's slip with a four-mile tide under foot than to come out of the slip against the same tide, and certainly the Northfield, pressed by that same tide against her easterly rack, was in a better position to wait without deranging her future movements than was a vessel coming on with the tide and which had to keep steerage way to make the turn in, as soon as she cleared the head of the pier against which her westerly rack rested.

Digitized by Google

(154 Fed. 190.)

PATEK v. AMERICAN SMELTING & REFINING CO.

(Circuit Court of Appeals, Eighth Circuit. June 11, 1907.)

No. 2,388.

DEATH—ACTION FOR WRONGFUL DEATH—RIGHT OF NONRESIDENT ALIEN TO BENEFIT OF STATUTE.

The Colorado statute, giving a right of action for wrongful death (Mills' Ann. St. §§ 1508–1510), first, to the husband or wife of the deceased, or, second, to his child or children, or, third, to his father and mother, or the survivor of them, includes among its beneficiaries nonresident aliens having the prescribed relationship to the deceased.

[Ed. Note.—For cases in point, see Cent. Dig. vol. 15, Death, § 37.]

In Error to the Circuit Court of the United States for the District of Colorado.

James F. Drake, for plaintiff in error.

Charles R. Brock (Milton Smith, on the brief), for defendant in error.

Before SANBORN and VAN DEVANTER, Circuit Judges, and PHILIPS, District Judge.

VAN DEVANTER, Circuit Judge. This was an action instituted in the Circuit Court of the United States for the District of Colorado by a father to recover damages for the death of his son. The complaint alleged that the plaintiff was a nonresident alien, that the defendant was a New Jersey corporation engaged in smelting and refining ores in Colorado, and that the son, while in the employ of the defendant at one of its smelting plants at Pueblo, Colo., came to his death through its negligence. Upon a demurrer to the complaint, the case was disposed of adversely to the plaintiff upon the theory that the statute of Colorado giving a right of action for death negligently caused by another, when rightly interpreted, excludes nonresident aliens from among the beneficiaries therein named.

The statute reads (Mills' Ann. St. §§ 1509, 1510):

"Sec. 1509. Whenever the death of a person shall be caused by a wrongful act, neglect or default of another, and the act, neglect or default is such as would (if death had not ensued) have entitled the party injured to maintain an action and recover damages in respect thereof, then, and in every such case, the person who, or the corporation which would have been liable, if death had ensued, shall be liable to an action for damages notwithstanding the death of the party injured.

"Sec. 1510. All damages accruing under the last preceding section shall be sued for and recovered by the same parties and in the same manner as provided in the first section of this act, and in every such action the jury may give such damages as they may deem fair and just, not exceeding five thousand (5,000) [dollars], with reference to the necessary injury resulting from such death, to the surviving parties, who may be entitled to sue; and also having regard to the mitigating or aggravating circumstances attending any such wrongful act, neglect or default."

Section 1508—section 1 of the original act—declares that the damages may be sued for and recovered, first, by "the husband or wife," or, second, by "the heir or heirs," or, third, by "the father and mother,"

Digitized by Google

or the survivor of them; and there is nothing in the context restricting these terms to residents or citizens, or indicative of a purpose to use them with other than their natural and ordinary meaning, save that it appears the words "heir or heirs" are used in the sense of child or children—that is, lineal descendants.

As the case is presented to us, the sole question for decision is: Are nonresident aliens excluded from among the beneficiaries, because not expressly mentioned, notwithstanding the natural and ordinary import of the language used includes the relatives named, wherever they may reside, and whatever may be their citizenship? The affirmative of the question is said to be sustained because (1) the laws of a country have no intrinsic force proprio vigore beyond its territorial jurisdiction and limits; (2) statutes generally apply to those only who owe obedience to the Legislature which enacts them, and whose interests it is its duty to protect; and (3) it is usual, in conceding or granting rights to nonresident aliens, to make express mention of them. Such is in effect the ruling in Pennsylvania and Wisconsin in respect of statutes similar to the one now before us (Deni v. Pennsylvania R. R. Co., 181 Pa. 525, 37 Atl. 558, 59 Am. St. Rep. 676; Maiorano v. Baltimore & Ohio R. R. Co., 65 Atl. 1077, 216 Pa. 402; McMillan v. Spider, etc., Co., 115 Wis. 332, 91 N. W. 979, 60 L. R. A. 589, 95 Am. St. Rep. 947); but the negative of the question is maintained in Massachusetts, Illinois, Delaware, Minnesota, Arizona, Iowa, Indiana, Virginia, New York, Ohio, Kentucky, and Kansas (Mulhall v. Fallon, 176 Mass. 266, 57 N. E. 386, 54 L. R. A. 934, 79 Am. St. Rep. 309; Kellyville Coal Co. v. Petraytis, 195 Ill. 215, 63 N. E. 94, 88 Am. St. Rep. 191; Szymanski v. Blumenthal, 3 Pennewill [Del.] 558, 52 Atl. 347; Renlund v. Commodore Mining Co., 89 Minn. 41, 93 N. W. 1057, 99 Am. St. Rep. 534; Donthron v. Phœnix, etc., Co. [Ariz.] 71 Pac. 941, 61 L. R. A. 563; Romano v. Capital, etc., Co., 125 Iowa, 591, 101 N. W. 437, 68 L. R. A. 132, 106 Am. St. Rep. 323; Cleveland, etc., Co. v. Osgood, 36 Ind. App. 34, 73 N. E. 285; Pocahontas Collieries Co. v. Rukas' Adm'r, 51 S. E. 449, 104 Va. 278; Alfson v. Bush Co., 182 N. Y. 393, 75 N. E. 230, 108 Am. St. Rep. 815; Pittsburgh, etc., Co. v. Naylor, 73 Ohio St. 115, 76 N. E. 505, 112 Am. St. Rep. 701, 3 L. R. A. [N. S.] 473, and note; Trotta's Adm'r v. Johnson, 90 S. W. 540, 28 Ky. Law Rep. 851; Atchison, etc., Co. v. Fajardo [Kan.] 86 Pac. 301). In England the rulings are conflicting and unsettled. Thus in Adam v. British & Foreign Steamship Co., [1898] 2 Q. B. 430, it was held by Darling, J., that, for the reasons before stated, Lord Campbell's act, the parent statute, does not give a right of action for the benefit of a nonresident alien, while in the later case of Davidsson v. Hill, [1901] 2 K. B. 606, that ruling was disapproved by Kennedy and Phillmore, JJ., and a right of recovery on behalf of a nonesrident alien widow was sustained. The negative of the question also has support in Luke v. Calhoun County, 52 Ala. 115, where it was held that a statute giving a right of action against a county to the husband or widow, or next of kin, of any person assassinated or murdered therein, could be as effectually invoked by a nonresident alien widow as if she were a resident and citizen; in Jeffersonville, etc., Co. v. Hendricks, 41 Ind. 48, 71, Philpott v. Missouri Pac. Ry. Co., 85 Mo. 164, Chesapeake, etc.,

Digitized by Google

Co. v. Higgins, 85 Tenn. 620, 4 S. W. 47, and Augusta Ry. Co. v. Glover, 92 Ga. 132, 142, 18 S. E. 406, where it was held that the rights conferred by a statute like the one before us are not restricted to persons domiciled in the state; and in Dennick v. Railroad Co., 103 U. S. 11, 19, 26 L. Ed. 439, where, in denying a contention that the provision in the New Jersey statute, "Every such action shall be brought by and in the names of the personal representatives of such deceased person," limited the right of action to a personal representative appointed in that state, it was said:

"The advocates of this view interpolate into the statute what is not there. * * * The statute says the amount recovered shall be for the exclusive benefit of the widow and next of kin. Why not add here, also, by construction, 'if they reside in the state of New Jersey'? It is obvious that nothing in the language of the statute requires such a construction. Indeed, by inference it is opposed to it. The first section makes the liability of the corporation or person absolute where the death arises from their negligence. Who shall say that it depends on the appointment of an administrator within the state?"

In the federal courts there have been but few direct rulings upon the question. Baltimore & Ohio R. R. Co. v. Baldwin, 75 C. C. A. 211, 144 Fed. 53, and Zeiger v. Pennsylvania R. R. Co. (C. C.) 151 Fed. 348, turned upon the interpretation of state statutes by the courts of the states enacting them; the former giving effect to the ruling in Ohio and the latter to that in Pennsylvania. Vetaloro v. Perkins (C. C.) 101 Fed. 393, arose under the Massachusetts statute in advance of its interpretation by the state court, and the right of recovery on the part of a nonresident alien was sustained in a strong opinion by Circuit Judge Colt, in the course of which it is said:

"To exclude nonresident aliens from the right to maintain an action under section 2 is to incorporate into the act a restriction which it does not contain. It is to refuse compensation to a certain class of persons for a real injury recognized by statute law. It is to relieve employers with respect to some employés from the exercise of due care in the employment of safe and suitable tools and machinery and competent superintendents. It is to offer an inducement to employers to give a preference to aliens and to discriminate against citizens. It is to hold that the Legislature of Massachusetts intended by this act to declare that employers should not be liable for the grossest negligence which results in the instant death of an alien employé in cases where his widow or next of kin happen to reside in a foreign country. * * * The purpose of section 2 of the Massachusetts statute was to remove a common-law obstacle, and to create a right of action for an admitted tort. The language of the section does not restrict the right to any particular class or classes of persons. It says 'the widow of the deceased'; 'the next of kin.' These words comprehend every widow, and all next of kin, whether citizens, residents, aliens, or nonresident aliens. The only qualification mentioned is that the next of kin must be dependent upon the wages of the employé for support. I can find no sound or just reason for holding that the Legislature intended to exclude nonresident aliens from the benefits of this section. * * * This whole act relating to the liability of employers is highly remedial. It was designed to benefit all employés. It has received, and should continue to receive, a liberal construction. It certainly should not receive a narrow and inequitable construction, founded upon any distinction between citizens and aliens, or residents and nonresidents."

Brannigan v. Union Gold Mining Co. (C. C.) 93 Fed. 164, arose under the present Colorado statute, and, in the absence of an inter-

Digitized by Google

pretation thereof by the state court, it was held, following the reasoning in Deni v. Pennsylvania R. R. Co., supra, and distinguishing Luke v. Calhoun County, supra, that nonresident aliens are excluded from among the beneficiaries because not expressly mentioned. That ruling was followed by the Circuit Court in the present case. The question still remains an open one in the Supreme Court of Colorado; but it is settled by its decision in Hayes v. Williams, 17 Colo. 465, 30 Pac. 352, that the statutory provisions under which this action is brought "are remedial, not penal"; that "they are in aid of the common law, not in derogation thereof"; and that they "should unquestionably receive a liberal construction." And this view of like statutes obtains in other jurisdictions. Thus, in Stewart v. Baltimore & Ohio R. R. Co., 168 U. S. 445, 448, 18 Sup. Ct. 105, 42 L. Ed. 537, it was said by Mr. Justice Brewer, speaking for the court:

"A negligent act causing death is in itself a tort, and, were it not for the rule founded on the maxim 'actio personalis moritur cum persona,' damages therefor could have been recovered in an action at common law. The case differs in this important feature from those in which a penalty is imposed for an act in itself not wrongful, in which a purely statutory delict is created. The purpose of the several statutes passed in the states, in more or less conformity to what is known as 'Lord Campbell's Act,' is to provide the means for recovering the damages caused by that which is essentially and in its nature a tort. Such statutes are not penal, but remedial, for the benefit of the persons injured by the death."

Another matter which militates rather strongly against putting a restrictive construction upon the present statute for the purpose of excluding nonresident aliens from its benefits is that the policy of Colorado towards them has been one of marked liberality. At an early period in her history she adopted the following statute (Mills' Ann. St. § 99):

"Sec. 99. All aliens may take, by deed, will or otherwise, lands and tenements and any interest therein, and alienate, sell, assign and transmit the same to their heirs, or any other persons, whether such heirs or other persons be citizens of the United States or not, and upon the decease of any alien having title to, or interest in, any land or tenements, such land and tenements shall pass and descend in the same manner as if such alien were a citizen of the United States; and it shall be no objection to any person having an interest in such estate, that they are not citizens of the United States, but all such persons shall have the same rights and remedies, and in all things be placed on the same footing, as natural-born citizens of the United States. The personal estate of an alien, dying intestate, who at the time of his death shall reside in this state, shall be distributed in the same manner as the estate and natural-born citizens; and all persons shall be entitled to their proper distributive shares of such estate under the laws of this state, whether they are aliens or not."

And, while this statute was subsequently modified by taking from nonresident aliens the right to thereafter acquire any interest in or right to use a body or tract, in compact form, of agricultural, arid, or range land exceeding 2,000 acres, the modification was accompanied by this significant declaration:

"Sec. 103. This act shall not be so construed as to prevent any nonresident alien, or corporation or syndicate organized under the laws of any foreign government, from acquiring the title to lands within the limits of any incorporate town or city in this state, or from acquiring the title to and possess-

Digitized by Google

ing and working any of the mines in this state, or from engaging in any industry in this state to the same extent as citizens or residents of the United States or this state, save and except only as limited by the provisions of section one of this act." Mills' Ann. St. §§ 100, 103.

But apart from the policy of the state manifested in this legislation, we think that the better reason, as also the greater weight of adjudged cases, forbids that nonresident aliens be excluded, by interpretation, from among the beneficiaries designated in the statute. The injury to them is not infrequently the same as if they were residents, the Legislature had full authority to include them, they are within the natural and ordinary import of the language employed, and neither the context nor the humane and corrective purpose of the statute suggests any occasion for a restrictive interpretation. No question of giving a law extrinsic force proprio vigore beyond the territorial jurisdiction and limits of the state enacting it is involved. All that is done is to remove a common-law obstacle to obtaining reparation, and in that sense to provide a remedy, for the commission within the state, by those within its jurisdiction and subject to its authority, of recognized wrongs to others, within its jurisdiction and entitled to its protection, whereby injury is done to still others, within or without its jurisdiction. In other words, the statute relates only to wrongs done within the state, imposes no duty upon any one not subject to its jurisdiction, and gives a right of action to persons without its jurisdiction only when they are injured by a wrong done within its jurisdiction. It is elemental that whether or not a wrong gives rise to a right of action for resulting injury is to be determined by the law of the place where the wrong is committed; but it is never said that such law is given extraterritorial operation merely because the person injured, whom it invests with a right of action, happens to be a nonresident or a nonresident alien.

As we are of opinion that the Circuit Court erred in its interpretation of the statute, the judgment is reversed, with a direction to set aside the ruling upon the demurrer and to take such other proceedings as may not be inconsistent with this opinion.

(154 Fed. 194.)

In re ROTHSCHILD.

(Circuit Court of Appeals, Second Circuit. May 10, 1907.)

BANKRUPTCY—JURISDICTION OF COURT—SUMMARY PROCEEDINGS.

Where a receiver for a bankrupt's estate has, with the assent of the bankruptcy court, vacated premises of which a third party was claiming the right of possession, and such third person has thereupon made peaceable entry thereon, a subsequently appointed trustee of the estate cannot oust the third party and retake possession through a summary proceeding in the court of bankruptcy.

Petition to Review Order of the District Court of the United States for the Southern District of New York.

This cause comes here upon petition to review an order of the District Court, Southern District of New York, denying an application of the trustee for an injunction and other relief. Rothschild, by agreement dated January 16, 1905, leased from the Gorham Manufacturing Company the premises 384 Fifth avenue from the date of completion of the building thereon until April

Digitized by Google

30, 1926, at the yearly rent of $35,000, to be paid in equal monthly payments on the 1st day of each and every month. He entered into possession of the lease some time prior to his bankruptcy. About July 14, 1906, the Gorham Company, claiming that the July rent was due and unpaid, began dispossess proceedings under the New York Code of Civil Procedure in the Municipal Court. The precept, which was returnable on July 24th, was served, not on the tenant personally, but by leaving a copy thereof with a person in charge on the premises. On the return day a stipulation signed by attorneys for the landlord and attorneys for the tenant was presented, consenting that Rothschild might have until the 26th to pay the rent, but not extending his time to plead or put in any defense; a clause to that effect being struck out of the stipulation. Thereupon a final order was made in favor of the landlord, awarding to said landlord the delivery of the premises by reason of the tenant's nonpayment of rent. The order contained a marginal note: "Warrant issued 27th day of July, 1906. See stipulation." The 26th of July passed without payment of the rent. On the 27th the warrant issued, and on the same day three checks, aggregating $2,916.67, were delivered by Rothschild to the attorneys for the company. Before the warrant was served or the checks cashed Rothschild was thrown into bankruptcy by the filing of a petition against him (July 31st). The next day a receiver was appointed, who at once took possession of the premises, and on August 7th the bankruptcy court made an order restraining the Gorham Company from taking any steps to carry out its dispossess warrant and from interfering with the possession of the receiver. The receiver continued in possession, selling out the bankrupt's stock and fixtures, through the month of August, by which time he had entirely disposed of them. Rothschild was adjudged a bankrupt August 30th. On September 7th, on notice to the company, the facts above recited were laid before the bankruptcy court, and the receiver moved that the injunction against the company should be continued. This motion was denied, without prejudice to the rights of any of the parties or of the estate of the bankrupt, whereupon the receiver vacated the premises and the company entered into possession of the same. Thereafter, on November 23d, the trustee, who had meanwhile been appointed and had succeeded the receiver, moved upon notice to vacate the order of September 7th, to reinstate the injunction, and make the same permanent, restraining the company from interfering with the possession of the trustee and his enjoyment of the unexpired term of the lease. This motion was denied, and that denial is brought here for review.

E. J. Myers and Myers & Goldsmith, for petitioner.

J. Noble Hayes, Peter B. Olney, Jr., and George Carleton Comstock, for respondent.

Before LACOMBE, TOWNSEND, and COXE, Circuit Judges.

PER CURIAM. The District Judge denied the motion, for the reason that "there is a fatal lack of jurisdiction apparent upon the face of the petition." The argument here has been widely extended, involving a discussion as to the general powers and limitations of courts of bankruptcy, when proceedings affecting rights of the bankrupt have been begun in a state court before the filing of the petition. It is unnecessary to enter upon any such discussion, since we are clearly of the opinion that after the representative of the bankrupt's estate (the receiver) has, with the apparent assent of the bankruptcy court, vacated premises of which a third party is claiming possession, and such third person has thereupon made peaceable entry thereon, a subsequently appointed representative of the estate (the trustee) cannot oust the third party and retake possession thereof by any such

Digitized by Google

summary proceeding as this, either in a bankruptcy court or in any other court of whose procedure we have any knowledge.

The order is affirmed, with costs.

(154 Fed. 286.)

RALLI et al. v. NEW YORK & T. S. S. CO.

(Circuit Court of Appeals, Second Circuit. April 30, 1907.)

No. 248.

1. SHIPPING—DAMAGE TO CARGO—EXEMPTION FROM LIABILITY UNDER HARTER ACT.

Section 3 of the Harter act (Act Feb. 13, 1893, c. 105, 27 Stat. 445 [U. S. Comp. St. 1901, p. 2946]), which exempts the owner of any vessel transporting property from liability for loss or damage thereto resulting from faults or errors in navigation, or in the management of the vessel, if he has exercised due diligence to make such vessel in all respects seaworthy and properly manned, equipped, and supplied, applies only to a vessel after the voyage has commenced, and cannot be invoked by an owner to relieve him from liability for loss of cargo through the careening and sinking of a vessel at the pier before she was fully loaded, due to the negligence of a watchman in failing to adjust her lines to permit her to drop with the tide.[1]

2. SAME—LIMITATION OF LIABILITY—PENDING FREIGHT.

Under Rev. St. § 4283 [U. S. Comp. St. 1901, p. 2943], which provides that the liability of the owner of a vessel for loss or damage to cargo occurring without his privity or knowledge "shall in no case exceed the amount or value of the interest of such owner in such vessel and her freight then pending," pending freight is limited to that due to or to be earned by the particular vessel through whose fault the loss occurred, and the fact that goods when lost or injured were being transported under through bills of lading upon different vessels of the same owner does not require a surrender of the freight earned by a different vessel in the course of such shipment.

3. SAME.

Where a lighter sank at a pier while being loaded, injuring a large part of her cargo, the fact that the uninjured cargo was then transferred by her owner to another vessel, and that such lighter did not deliver any part of it, does not relieve the owner in proceedings for limitation of his liability from the necessity of surrendering as "pending freight" the freight which she would have earned if she had carried the cargo.

4. SAME—DAMAGES RECOVERABLE FOR LOSS OF CARGO—SALVAGE EXPENSES OF CARRIER.

It is the duty of a carrier of cargo which meets with disaster through the fault of the vessel to do what he can to minimize the damage, by which he profits as well as the cargo owner, and he is not entitled to a deduction of expenses so incurred from the damages recoverable by the cargo owner by reason of his loss.

Appeal from the District Court of the United States for the Southern District of New York.

This cause comes here upon appeal from a decree of the District Court, Southern District of New York, awarding to the libelants, as owners of a shipment of cotton, certain damages consequent upon the sinking of the lighter O. M. Hitchcock, while lying moored to Pier 19, East river, before daylight on the morning of December 30, 1901. The cotton was shipped under

---

[1] See note on page 294.

Digitized by Google

through bills of lading at Galveston on respondent's steamer Alamo for transportation to New York, there to be delivered, "being lightered, ferried, or carted at cargo owner's risk," to the Phenix Line for transportation to Ghent, Belgium. The Alamo reached New York and discharged 700 bales in good order at Pier 19, East river, where respondent on Saturday, December 28, 1901, loaded 681 of said bales (with 14 bales of another shipment) on its lighter O. M. Hitchcock for literage to the Phœnix Line Pier at Hoboken, N. J. More cotton, including the 19 remaining bales of this shipment, was to be loaded on the lighter, and she lay at Pier 19 Saturday night and Sunday. Some time between 3:30 and 4 a. m. on Monday morning she careened and sank, causing the loss of 4 bales and damage to 505 bales of libelant's cotton. The cause of the accident was the negligence of the respondent's watchman, who was in sole charge of the Hitchcock and of another lighter, in not loosening the mooring lines when the tide began to fall, so that there was not sufficient slack on the lines to permit the barge to drop with the tide. The undamaged bales, 172 in number, together with the 14 bales of another shipment, were then loaded on another lighter of the respondent, delivered to the Phœnix Line, and carried to Belgium. The 505 damaged bales, being not of sufficient value to warrant the expense of exportation, were by respondent carried to Erie Basin, spread out to dry, and finally sold at auction. Some of this damaged cotton had been taken from the deck of the Hitchcock, some from the adjoining slip, and some had drifted down the East river and been rescued by the efforts of respondent and of independent salvors. The net proceeds of sale less freight on same from Galveston to New York were paid over by respondent to libelants. The district judge held that respondent was entitled to the benefit of the limited liability act, but that it was not entitled to set off any amounts expended by it, in saving libelants' cargo; and ordered a reference to ascertain the amount of libelants' damage and the value of respondent's interest in the barge and freight then pending. The referee's report thereon was subsequently confirmed.

Frederick M. Brown and Butler, Notman & Mynderse, for appellant.

Lawrence Kneeland, for appellee.

Before WALLACE, LACOMBE, and TOWNSEND, Circuit Judges.

LACOMBE, Circuit Judge (after stating the facts). Some of the questions which were argued in the District Court have been eliminated, and the following only are submitted for determination here.

1. It is contended that respondent should be given the benefit of the third section of the Harter act (Act Feb. 13, 1893, c. 105, 27 Stat. 445 [U. S. Comp. St. 1901, p. 2946]), which reads:

"3. If the owner of any vessel transporting merchandise or property to or from any port in the United States of America shall exercise due diligence to make the said vessel in all respects seaworthy and properly manned, equipped and supplied, neither the vessel, her owner or owners, agents or charterers, shall become or be held responsible for damages for loss resulting from faults or errors in navigation or in the management of said vessel."

Manifestly this section deals with a specific vessel; i. e., the vessel on which the merchandise is being transported. When the entire transportation is made up of successive stages by successive vessels, this section applies to the particular vessel whose navigation or management has been faulty or erroneous. In the case at bar, then, we are concerned, not with the Alamo, but with the Hitchcock. We are of the opinion that respondent cannot claim the benefit of the section above quoted for the reason that the voyage had not commenced, the

Digitized by Google

cargo was not yet all on board, nor the vessel ready to sail. We find no authority either way on this proposition. The citations on the appellee's brief deal with different questions; but the language of the section so clearly contemplates a distinction between the preparation for a voyage, and the management of the same after it has begun, that, in the absence of adverse authority, we feel no hesitation in adopting this construction.

2. The District Court found the value of the pending freight to be 19 cents per 100 pounds. The through freight rate from Galveston to Ghent was 37 cents, and it was shown that the Phœnix Line was to receive 18 cents of this amount for its share. It further appeared that the price of lightering in New York Harbor between the two piers was 3 cents, leaving 16 cents for the transportation from Galveston to New York.

The District Court held that there should be surrendered as the value of "pending freight" 19 cents per 100 pounds for the cotton on the Hitchcock which was delivered sound, or sold in a damaged condition, upon the theory that the adventure in which the Hitchcock was employed was completing the voyage from Galveston to the Phœnix Line, treating both steps in the transportation as a single adventure. It must be remembered that the goods were not lost on or by any act of the Alamo, but solely through the fault of the Hitchcock while on board the latter vessel. The circumstance that the same individual owned both vessels is incidental merely, and not important. The language of the statute is plain and unambiguous—the liability of the owner or owners "shall in no case exceed the amount or value of the interest of such owner in such vessel and her freight then pending." In the case at bar "such vessel" was the Hitchcock, and "her freight then pending" was what she was to earn by transporting the goods from New York to Hoboken, N. J., which the evidence shows was 3 cents per 100 lbs. We have examined the authorities cited by the libelant (Allen v. Mackay, 1 Sprague, 219, Fed. Cas. No. 228; the Main v. Williams, 152 U. S. 132, 14 Sup. Ct. 486, 38 L. Ed. 381; the Giles Loring (D. C.) 48 Fed. 473; Whitcomb v. Emerson (D. C.) 50 Fed. 128; The Abbie C. Stubbs (D. C.) 28 Fed. 720; The Jane Grey (D. C.) 99 Fed. 582; Pacific Coast Co. v. Reynolds, 114 Fed. 877, 52 C. C. A. 497; La Bourgogne, 139 Fed. 433, 71 C. C. A. 489), and find in them no authority for extending the words of the statute "her freight then pending" beyond their plain, natural, and ordinary signification. What Congress intended and undertook to do was to relieve the owner of "such vessel" upon giving up her value and her earnings. That the same owner may have earned something more by the operations of some other vessel which he happens to own is not material.

The respondent contends that there was no "pending freight" of the Hitchcock, because she never made delivery of any of the cotton to any one. She was in no way damaged by her mishap. As soon as she was righted and pumped out, she was in condition to take the cotton to Hoboken. We are of the opinion that the owner could not relieve himself from the obligation of the statute merely by substituting some other boat of his own as the vehicle of transportation,

Digitized by Google

and for the cotton thus delivered at Hoboken he must give up 3 cents per 100 pounds. As to the cotton which was taken to the Erie Basin, dried out, and sold, it is wholly immaterial what the facts really are or what may be their legal effect. The respondent cannot be heard to question the proposition that the Hitchcock earned her freight because respondent has deducted the amount of that freight from the proceeds of sale and accounted only for the balance. Whether it pays that amount as "pending freight" under the limited liability statute, or as money improperly retained out of the proceeds of libelant's cotton, is a matter of no importance.

As to the 16 cents per 100 pounds for freight from Galveston to New York on the damaged cotton, it appears that the propriety of the decision not to export, but to condition by drying and to sell at auction, was not disputed by libelant. The bills of lading provided that, in the event of sale because of damage or otherwise at any port short of their ultimate destination, out of the proceeds thereof the pro rata freight for that part of the transportation which may have been completed shall be due and payable. Freight pro rata itineris was therefore properly paid to the owner of the Alamo out of the proceeds of sale of the damaged cotton.

3. Respondent further contends that it should be allowed to recoup two items of expense: (1) For moneys paid out in rescuing the cotton from the river; and (2) expenses incurred in drying the cotton and putting into an improved condition for the auction. It is the duty of the carrier of cargo which has met with such a disaster to do what he can to minimize the loss. By such exertions he benefits, as well as the cargo owner. The argument now advanced is that a refusal to allow such deductions from the surrender value would tend to discourage exertions by the carrier to minimize damage, when it is evident that the damage might exceed the value of the vessel. The point made is not supported by authority, and we concur with the district judge in the conclusion that under Fleming v. Lay, 109 Fed. 952, 48 C. C. A. 748, and The Pine Forest, 129 Fed. 700, 64 C. C. A. 228, 1 L. R. A. (N. S.) 873, the deductions were properly disallowed.

The cause is remanded to the District Court, with instructions to modify the decree in conformity to this opinion. Since the appellant has prevailed in part only, there should be no costs of this appeal.

NOTE.—The following is the opinion of the District Court by Holt, District Judge:

HOLT, District Judge. I think that the cause of the accident was the negligence of McMahon, the watchman, in not loosening the mooring lines when the tide began to fall, so that there was not sufficient slack on the lines to permit the barge to drop with the tide; that the respondent is sued in this action and is responsible, if responsible at all, not as carrier of the cotton on the through bill of lading, but as owner of the barge, in the same manner as another owner of a barge would have been if employed to lighter the cotton in New York Harbor; that no provisions in the bill of lading exempt the respondent from liability, because, first, the respondent is not sued in respect to any obligations governed by the bill of lading, but simply as owner of the barge, and, second, if it were liable under the bill of lading, any provisions in it exempting the

Digitized by Google

respondent from liability for negligence would be void under the general rules of law; that the Harter act has no application to this case, because that act, in my opinion, applies only to vessels transporting merchandise on a voyage from one port to another, and not to mere harbor craft moving merchandise from one place to another in the same port, as is shown by its express provisions, and by the fact that it was passed in order to prevent the injustice caused to the owners of American vessels, in competition with owners of English vessels, from the fact that by the English law provisions in bills of lading exempting the owners from liability for negligence were valid (The Delaware, 161 U. S. 459, 16 Sup. Ct. 516, 40 L. Ed. 771; The Irrawaddy, 171 U. S. 187, 18 Sup. Ct. 831, 43 L. Ed. 130); and therefore, in my opinion, the act is to be construed as applying only to vessels carrying merchandise on voyages from one port to another for which formal bills of lading are usually issued; that the principal officers or the manager of the respondent had no privity or knowledge of the negligence which caused the damage, and therefore it is entitled to the benefits of the limited liability act, but that the respondent is not entitled to set off any amounts expended by it in saving the libelant's cargo (Fleming v. Lay, 109 Fed. 952, 48 C. C. A. 748; The Pine Forest [D. C.] 119 Fed. 999).

My conclusion is that there should be a decree for the libelants, and a reference to ascertain the amount of the libelants' damage and the value of the respondent's interest in the barge and freight then pending, and that the libelant should ultimately have judgment for the amount of such damage, if it is less than the value of such barge and freight, or, if it is greater, for an amount equal to the value of the barge and freight, with costs.

NOTE.[1]

Statutory Exemptions of Shipowners From Liability.

I. In General.

[a] (U. S. 1903) The provisions of the Harter act do not relieve a ship from liability for damages to cargo resulting from negligence in stowage or in failing to properly cover a hatch to prevent leakage. Decree (D. C. 1902) 113 Fed. 985, affirmed.—The Mississippi, 120 Fed. 1020, 56 C. C. A. 525.

[b] (U. S. 1903) The trend of judicial decision in the United States has been to construe the Harter act strictly, and not to extend the carrier's exemption from liability to doubtful and uncertain cases, but to leave such liability as it was defined and enforced by the law maritime and by the common law, unless the act plainly and unequivocally asserts a different liability. Decree (D. C. 1901) 107 Fed. 294, modified.—The Germanic, 124 Fed. 1, 59 C. C. A. 521.

[c] (U. S. 1904) The Harter act (Act Feb. 13, 1893, c. 105, 27 Stat. 445 [U. S. Comp. St. 1901, p. 2946]) does not affect the rights of parties under a charter party.—Lake Steam Shipping Co. v. Bacon (D. C.) 129 Fed. 819.

[d] (U. S. 1904) A canal boat brought a cargo of hay from Quebec to New York, where it arrived in good condition. It was loaded by the consignor, and was to be unloaded by libelants, who had become owners of the bills of lading. On arriving in New York the boat and cargo were seized by libelants under process from the state court in a suit against the consignor, and held on demurrage for some 30 days, when the suit was dismissed and the cargo was unloaded. During such time the weather was damp, and the hay in the hold became musty. The vessel was seaworthy, having no more leakage than was usual in such class of boats. *Held*, that the vessel was exempt from liability by section 3 of the Harter act (Act Feb. 13, 1893, c. 105, 27 Stat. 445 [U. S. Comp. St. 1901, p. 2946]), the injury having arisen from an inherent defect of the thing carried.—The M. C. Currie (D. C.) 132 Fed. 125.

[e] (U. S. 1907) Section 1 of the Harter act (Act Feb. 13, 1893, c. 105, 27 Stat. 445 [U. S. Comp. St. 1901, p. 2946]), which provides that any clause of a bill of lading or shipping receipt for the transportation of merchandise or

[1] Supplemental to note to Nord-Deutscher Lloyd v. Insurance Co. of North America, 49 C. C. A. 11.

Digitized by Google

property from or between ports of the United States and foreign ports, whereby the vessel owner, master, or agent shall be relieved from liability for loss or damage arising from negligence, etc., "shall be null and void and of no effect," applies to any shipment "from ports of the United States," whether to a foreign or domestic port, and is broad enough to render void a clause of a bill of lading by which the shipper waives any lien upon the vessel for any breach thereof, where it is attempted to set up such clause as a defense to a libel in rem to recover for loss or damage to cargo arising from negligence of the carrier.—The Tampico (D. C.) 151 Fed. 689.

II. Errors of Navigation or Management.

[a] (U. S. 1903) The unloading of cargo in the port of discharge by stevedores has no relation to the "management of the vessel," within the meaning of the third section of the Harter act (Act Feb. 13, 1893, c. 105, 27 Stat. 445 [U. S. Comp. St. 1901, p. 2946]), not being an act done with any view to such management, but relates to the "care or delivery of cargo," within the meaning of the first section; and where by the negligent and improper manner in which it was done it brought about a condition of instability in a ship, which, owing to a large accumulation of ice above her upper deck, rendered her top-heavy, and she rolled over and sank at her dock, injuring the remaining cargo, she is liable for the damage, although other acts done or omitted in the management of the vessel may have contributed to the injury. Decree (D. C. 1901) 107 Fed. 294, modified.—The Germanic, 124 Fed. 1, 59 C. C. A. 521.

[b] (U. S. 1904) Where a ship was at the commencement of a voyage in all respects seaworthy, and properly manned, equipped, and supplied, damage to a sugar cargo from fresh water which escaped into the hold where the sugar was stowed while the cargo was being discharged, by reason of a valve having been improperly left open while water from the river was being pumped into the engine tank, was due to a fault in the management of the vessel, for which she is exempted from liability by section 3 of the Harter act (Act Feb. 13, 1893, c. 105, 27 Stat. 445 [U. S. Comp. St. 1901, p. 2946]).—The Wildcroft, 130 Fed. 521, 65 C. C. A. 145.

[c] (U. S. 1905) A ship bound from Antwerp to San Francisco with a cargo of cement encountered such rough weather in attempting to round Cape Horn and was subjected to such strain that her deck seams opened and a part of the cargo was damaged by water. She finally abandoned the attempt and completed the voyage by way of the Cape of Good Hope and Australia. At the time of her change of course she was 370 miles distant from Port Stanley, where she could have been repaired; but she did not put in for repairs, and before she reached Australia the cargo received further damage by reason of the open seams. *Held*, that the change of course and also the determination of the master to proceed without putting in for repairs were matters pertaining to the "navigation and management of the vessel," within Harter Act Feb. 13, 1893, c. 105, § 3, 27 Stat. 445 [U. S. Comp. St. 1901, p. 2946], and not to the custody, care, or proper delivery of the cargo, within the meaning of section 2, and that, assuming the vessel to have been in all respects seaworthy, and properly manned, equipped, and supplied at the beginning of the voyage, she was exempted by the act from liability for the damage caused or contributed to by the failure to repair.—Corsar v. J. D. Spreckels & Bros. Co., 141 Fed. 260, 72 C. C. A. 378; J. D. Spreckels & Bros. Co. v. Corsar, Id.

[d] (U. S. 1907) The navigation and management of a vessel within the meaning of section 3 of the Harter act (Act Feb. 13, 1893, c. 105, 27 Stat. 445 [U. S. Comp. St. 1901, p. 2946]), includes the determination of the time and manner of leaving port, which is the prerogative of the master; and under said section, where a vessel was seaworthy and in all respects properly manned, equipped, and supplied, the owners are not liable for a loss or damage to cargo due to a peril of the seas, even though the exposure to such peril was through the fault of the master in failing to ascertain or heed the warnings of the weather bureau before starting on the voyage.—Hanson v. Haywood Bros. & Wakefield Co., 152 Fed. 401, 81 C. C. A. 527.

[e] (U. S. 1903) Under Harter Act Feb. 13, 1893, c. 105, § 3, 27 Stat. 445 [U. S. Comp. St. 1901, p. 2946], a steamer which was seaworthy and properly manned, equipped, and supplied, carrying goods between two ports of the

Digitized by Google

United States, is not liable for loss or injury to such goods by reason of the barge on which they were loaded striking an obstruction in the river; the loss in such case resulting either from a danger of the river or from a fault or error in navigation or in the management of the vessel.—The Nettie Quill (D. C.) 124 Fed. 667.

[f] (U. S. 1903) A ship bound from Antwerp to San Francisco with a cargo of cement encountered such rough weather in attempting to round Cape Horn, and was subjected to such strain, that her deck seams opened and a part of the cargo was damaged by water. She finally abandoned the attempt, and completed the voyage by way of Cape Good Hope and Australia. When she changed her course she was within 60 miles of the Falkland Islands, but did not put in for repairs, and before she reached Australia the cargo suffered further damage by reason of the open seams. *Held*, that the failure of the master to seek a port and repair the deck before starting back was not a fault or error in navigation or in the management of the vessel, within section 3 of the Harter act, but simply a failure to use proper care for the protection of the cargo, which rendered the ship liable for the resulting damage.—The Musselcrag (D. C.) 125 Fed. 786.

[g] (U. S. 1904) Where the owner of a vessel, while in her home port, permitted all of her crew to leave for the night, except the fireman, cook, and a deck hand, and permitted them to sleep without maintaining a proper watch, and the fires to be banked so that no steam was available to work the pumps in case of an emergency, he was guilty of negligence, rendering the vessel liable for loss of cargo by the sinking of the vessel from injuries caused by an ice jam, notwithstanding the Harter act (Act Feb. 13, 1893, c. 105, § 3, 27 Stat. 445 [U. S. Comp. St. 1901, p. 2946]), providing that, if the owner shall exercise due diligence to make the vessel seaworthy and properly manned, he shall not be liable for negligence in the navigation or management thereof, etc.—The Valentine (D. C.) 131 Fed. 352.

III. Seaworthiness.

[a] (U. S. 1903) The furnishing of a refrigerating apparatus in good order and repair, competent for the safe transportation of a cargo of dressed beef which a vessel has undertaken to carry, is within the obligation to use due diligence to provide a seaworthy vessel, imposed upon the owner by the Harter act (Act Feb. 13, 1893, c. 105, 27 Stat. 445 [U. S. Comp. St. 1901, p. 2946]), as a condition precedent to the enjoyment of the benefits of that act in limiting the owner's liability as provided therein. Judgment (1901) 108 Fed. 880, 48 C. C. A. 123, reversed.—Martin v. The Southwark, 191 U. S. 1, 24 Sup. Ct. 1, 48 L. Ed. 65.

[b] (U. S. 1904) A ship started on her voyage with a list of 8 or 9 degrees, which increased to such an extent, in consequence of her improper loading, that it was imprudent to proceed, and she put in at an intermediate port. Having opened a port to readjust the cargo while lying at a pier, the ship gave a sudden lurch, which brought the port under water, and she sank, damaging the cargo. *Held*, that the damage was attributable to her initial instability, which rendered her unseaworthy at the beginning of the voyage, and for the consequences of which the owners were not exempted from liability by the Harter act. Decree (D. C. 1901) 108 Fed. 886, reversed:—The Oneida, 128 Fed. 687, 63 C. C. A. 239.

[c] (U. S. 1907) If a ship starts on a voyage with a port negligently left open, causing damage to cargo, her owners are liable for failing to provide a ship seaworthy at the beginning of the voyage, and are not protected by section 3 of the Harter act (Act Feb. 3, 1893, c. 105, 27 Stat. 445 [U. S. Comp. St. 1901, p. 2946]), on the ground that the fault was one in navigation or the management of the vessel, although proper appliances for closing the ports were furnished; and this rule is especially applicable where the ports were so located as to be submerged when the vessel was fully loaded. Decree (D. C. 1905) 137 Fed. 443, affirmed.—The Tenedos, 151 Fed. 1022, 82 C. C. A. 671.

[d] (U. S. 1902) To constitute due diligence on the part of a shipowner to make the vessel "in all respects seaworthy" at the beginning of a voyage so as to entitle him to the benefit of the exemption contained in section 3 of the Harter act, it is not sufficient to provide her with proper structures and equip-

Digitized by Google

ment, but due diligence must also be exercised by the owner's servants in the use of such equipment before and up to the time of the beginning of the voyage.—The Manitou (D. C.) 116 Fed. 60.

[e] (U. S. 1902) A shipowner does not comply with the requirement of section 3 of the Harter act [U. S. Comp. St. 1901, p. 2946], so as to be entitled to the exemptions therein provided, by merely furnishing proper equipment of the vessel prior to the commencement of the voyage, but he is bound to see that his servants exercise due diligence in its use to make the vessel seaworthy at the time the voyage actually commences.—The C. W. Elphicke (D. C.) 117 Fed. 279, decree affirmed (1903) 122 Fed. 439, 58 C. C. A. 421.

[f] (U. S. 1903) Sugar cargo stowed in a hold was damaged during a voyage by seawater, which leaked from a water-ballast tank, through a manhole, opening into the hold. After the vessel sailed, the valve admitting water to the tank was opened, and negligently allowed to remain open longer than necessary to fill the tank, and it was during the time it was so open that the leak was discovered. But it appeared that while in port the manhole cover had been taken off and replaced, and it was not shown that before sailing it was tested with such pressure as it was afterwards subjected to. *Held*, that the damage must be attributed to the unseaworthy condition of the vessel at the commencement of the voyage, due to negligence, for which the owners were not exempted from liability by the Harter act (27 Stat. 445 [U. S. Comp. St. 1901, p. 2946]).—American Sugar Refining Co. v. Rickinson (D. C.) 120 Fed. 591, decree reversed Same v. Rickinson Sons & Co., 124 Fed. 188, 59 C. C. A. 604.

(154 Fed. 1005.)

UNITED STATES v. THOMAS MEADOWS & CO.

(Circuit Court of Appeals, Second Circuit. March 5, 1907.)

No. 183 (3,728).

CUSTOMS DUTIES—CLASSIFICATION—WAFERS—BISCUITS—CONFECTIONERY.

Sweet crackers, known as "wafers and biscuits," in which the proportion of the sweetened centers to the pastry envelopes, is large, but in which flour is used to a substantial extent, are not dutiable either directly or by similitude as "confectionery," under Tariff Act July 24, 1897, c. 11, § 1, Schedule E, par. 212, 30 Stat. 168 [U. S. Comp. St. 1901, p. 1647].

Appeal from the Circuit Court of the United States for the Southern District of New York.

This is an appeal from a decision of the circuit court affirming a Decision of the Board of United States General Appraisers (G. A. 5,830, T. D. 25,731), which reversed the assessment of duty by the collector of customs at the port of New York on certain imported merchandise, which was classified as confectionery under the provision in Tariff Act July 24, 1897, c. 11, § 1, Schedule E, par. 212, 30 Stat. 168 [U. S. Comp. St. 1901, p. 1647], for "sugar candy and all confectionery not specially provided for."

The opinion filed below, and here reprinted from 147 Fed. 757, was in full as follows:

PLATT, District Judge. The merchandise in suit consists of four exhibits. Exhibits A and C were invoiced as "Arctic and President Wafers," respectively; Exhibits B and D as "Acorn and Philippine Biscuits," respectively. The collector assessed them under Act July 24, 1897, c. 11, § 1, Schedule E, par. 212, 30 Stat. 168 [U. S. Comp. St. 1901, p. 1647], at 50 per cent. ad valorem. The importers protest-

Digitized by Google

ed, and after a hearing, the Board of General Appraisers sustained the protest and placed them under section 6, 30 Stat. 205 [U. S. Comp. St. 1901, p. 1693], as unenumerated manufactured articles. The government seeks a review, and much additional testimony has been taken.

It is not an easy matter to draw an exact dividing line between candy and pastry. In early days an apothecary was called a confectionary or confectioner, because he used sweets to disguise the nauseous taste of his medicines, and thus by analogy, we have come to look upon the confectioner as the master of the art of making candy and confections. When the last tariff act was passed the word confectionery had a rather broader meaning in England than in this country. The sugar wafers of neither country had, however, so attracted the attention of the Congress as to receive special recognition. They had been imported ever since the war in large quantities, and the proportion between the sweetened centers and the pastry envelopes had gradually changed in favor of the former, but they were always treated by the authorities and by the trade as products of the baker's art until within the yast year or two. There has been some effort of late in the trade to treat similar articles as confections, but even so interested a party as the National Biscuit Company has catalogued them under the general term of biscuits, and the merchandise in suit has been generally bought, sold, and listed in the wholesale trade as biscuits or crackers. The local interest has now become so large and effective that an attempt is made to classify them, for tariff purposes, as a product of the confectioner's art; and so the issue confronts us. Confections on the one hand, sweetened biscuits and sugar wafers on the other: Shall they all be classified as confectionery, or shall the latter two remain where they have long stood as products of the baker's or pastry cook's art?

In both arts we can find considerable quantities of sweetening, and on the baker's side may be instanced the sweet cookies of our childhood days. In one way, however, the line of demarcation is strongly emphasized. The confectioner uses practically no flour, and the baker always uses it; in varying quantities, it is true, but in every case to a substantial amount. As the sugary proportion increases in the baker's art, the point will soon be reached where, if the flour shall be used at all, that use will be purely incidental. When its sole use shall be, as the government puts it, to form an envelope to contain a confectionery filler, it will be a mere trick, or subterfuge, to point out its presence. As I view the matter, that time has not yet arrived. The sweetened centers of the merchandise in suit would be disagreeable and nauseating without the disguise offered by the harmonious assimilation therewith of the pastry exterior. These reasons, as well as others, offer a satisfactory answer to the similitude contention put forward by the government. After the substantially uniform treatment by the trade and authorities for many years of merchandise very much like that in suit, though with possibly a trifle less sweetening, as products of the baker's art, it would be, as I view the matter, judicial legislation to change the classification at this moment.

The decision of the Board of Appraisers is affirmed.

Digitized by Google

D. Frank Lloyd, Asst. U. S. Atty., and Earl D. Babst, Special Asst. U. S. Atty.

Walden & Webster (Henry J. Webster, of counsel), for the importers.

Before WALLACE, LACOMBE, and COXE, Circuit Judges.

PER CURIAM. Decision affirmed on opinion below.

(154 Fed. 445.)

JOHNSTON v. UNITED STATES.

(Circuit Court of Appeals, Ninth Circuit. May 27, 1907.)

No. 1,394.

1. ASSAULT—EVIDENCE—PERTINENCY TO ISSUES.

On the trial of a defendant for assault with a dangerous weapon, where it was shown that he went upon a mining claim in the peaceable possession of a lessee, and, on being ordered off, threatened such lessee with a revolver, evidence offered to show that a third person owned an interest in the claim, and that such ownership had been recognized by the lessee, who had acknowledged the right of such person to have a representative on the claim, was properly excluded as having no tendency in any event to justify the assault or to establish a defense, especially where defendant made no claim to represent such person, who already had a representative on the claim with the lessee's consent.

2. SAME—TRIAL—INSTRUCTIONS.

The charge of the court in a prosecution for assault with a dangerous weapon considered, and, taken as a whole, *held* free from error.

[Ed. Note.—For cases in point, see Cent. Dig. vol. 14, Assault and Battery, §§ 142–500.]

3. CRIMINAL LAW—TRIAL—REMARKS BY COUNSEL.

The use of language by counsel calculated to prejudice a defendant in a criminal case and not justified by the evidence is improper and censurable and should be discontinued by the court, but invective based on the evidence and inferences legitimately to be drawn therefrom is not inhibited, and it is usually within the discretion of the trial court to determine whether or not the limits of professional propriety have been exceeded.

[Ed. Note.—For cases in point, see Cent. Dig. vol. 14, Criminal Law, §§ 1663, 1669, 1670.]

4. SAME—REVIEW BY APPELLATE COURT—INSTRUCTIONS.

Where the record in the appellate court does not contain the whole charge of the trial court, it will be presumed that it properly charged upon every branch of the case and that further instructions were given to correctly modify erroneous instructions shown by the record, if it is clear that they could have been so corrected.

[Ed. Note.—For cases in point, see Cent. Dig. vol. 15, Criminal Law, § 3032.]

Ross, Circuit Judge, dissenting.

In Error to the District Court of the United States for the Second Division of the District of Alaska.

The plaintiff in error was convicted of the crime of assault with a dangerous weapon, under the provisions of section 24 of the Penal Code of Alaska. The assault was alleged to have been committed upon the prosecuting witness,

Digitized by Google

F. H. Waskey, with a revolver. The facts shown on the trial were as follows: On April 24, 1906, Waskey was residing on a mining claim near Nome, in the District of Alaska, and was mining upon an adjacent claim known as the "Three Star Fraction." He was operating under a lease, but the terms of the lease and the name of the lessor or lessors were not disclosed upon the trial. On the evening of that day Waskey saw the plaintiff in error, together with one Cummings, enter upon the Three Star Fraction. After he had exchanged friendly greetings with the plaintiff in error, the latter told him that he and Cummings had been sent out by Mr. Wood to be there "in case there was any trouble." Mr. Wood was an attorney, and he represented a man by the name of Gray, who appears to have claimed an interest in the Three Star Fraction mining claim. Waskey was aware that Gray asserted such claim, and he had expressed his willingness to allow him a representative on the mining claim, and at the time in question one Ryan, who was the representative so permitted, was on the ground. To the remark of the plaintiff in error, Waskey answered, "Why, Harry, there is not going to be any trouble here," to which the plaintiff in error replied that there might be. Waskey asked him if he had any papers from the court, to which he answered, "No." Waskey was then called to the telephone. He afterwards returned, and, resuming the conversation, he told the plaintiff in error that he could not allow him to stay there. The plaintiff in error replied that he certainly was going to stay there. In the course of the conversation the plaintiff in error and Cummings crossed the boundary line of the mining claim. Waskey then told plaintiff in error that now he was off the ground he did not want him or Cummings to come back, but they immediately stepped back, and the plaintiff in error said to Waskey: "Don't touch me. Keep your hands off me." This was repeated several times, with the further remark: "You keep your distance, Frank, or I am liable to hurt you." Waskey then went again to the telephone, and, after receiving instructions to eject the plaintiff in error and Cummings from the ground, he called together some of his men to assist him, and instructed them if they had any guns to lay them down, saying: "This is not going to be a gun play." Waskey and his men then stepped forward, intending, as he testified, to put the plaintiff in error and Cummings off the premises and to use, in case of resistance, sufficient force for that purpose, but with no intention to do them any bodily harm, when the plaintiff in error and Cummings drew their revolvers, and pointed the same at Waskey and his men, and the plaintiff in error said: "Now, Frank, you are a good friend of mine. You are the last man in the world I want to hurt, but I will have to;" and he also said: "There is no occasion for all of this or for any trouble here. I am not going to interfere with you or molest you in any way." When the revolvers were drawn and pointed at Waskey and his men, they withdrew. Waskey testified that none of them had guns. The plaintiff in error on the trial offered to prove "that one Herbert Gray is the owner of an undivided one-half interest in the Three Star Fraction, the mining ground on which this alleged assault is said to have taken place; that some time previous to the time of the alleged assault A. D. Sheldon and Capt. Pidgeon had a conversation with Frank Waskey in a cabin on the ground adjacent thereto, in which said Frank Waskey distinctly stated that he recognized the one-half interest of Herbert Gray, and conceded to these persons the right of Herbert Gray to have a representative on the ground at all times, and in pursuance thereof the said Herbert Gray did have a representative at the time of the alleged assault and for a period of three weeks prior thereto, and at the time alleged in the indictment of the alleged assault that the defendant J. H. Johnston and P. F. Cummings were upon the ground for the purpose of representing the interest of said Herbert Gray. This testimony is offered for the purpose of impeaching the testimony of the witness Frank H. Waskey."

Ira D. Orton, Roy G. Hudson, J. K. Woods, J. C. Campbell, W. H. Metson, and F. C. Drew, for plaintiff in error.

Henry M. Hoyt, U. S. Atty.

Before GILBERT and ROSS, Circuit Judges, and HUNT, District Judge.

Digitized by Google

GILBERT, Circuit Judge, after stating the case as above, delivered the opinion of the court.

It is contended on behalf of the plaintiff in error that if the defense had been allowed to prove that Waskey, the prosecuting witness, admitted Gray's ownership of a one-half interest in the mining claim, and conceded the right of the latter to have a representative at all times on the ground, and the other facts suggested in the offer of proof, they would have established the fact of the co-tenancy of Gray with the other owners, and therefore the right of Gray to the possession of the premises in person or by his agent, since by the Code of Alaska it is provided that "all persons having an undivided interest in real property are to be deemed and considered tenants in common." But this argument leaves out of consideration the nature of Waskey's possession. There is nothing in the evidence or in the offer of proof to show that he was a co-tenant with any one. He was a lessee, and as such it must be presumed that he was entitled to the exclusive possession of the leased premises, and therefore had the right to resist with a reasonable degree of force a trespass upon his possession. For aught that appears to the contrary, Gray may have been one of his lessors. According to the offer of proof, the only right which Waskey recognized in Gray was his right to be represented by one person on the premises; but this recognition of right had been fully answered by the permitted presence of Ryan, who, as the representative of Gray, was then, and for three weeks had been, on the premises. We find no error in the exclusion of the proffered testimony. Waskey was in the peaceable possession of the mining claim, operating it under a lease which gave him, as we must assume, the exclusive right to the possession when the plaintiff in error and Cummings, armed with revolvers, invaded his possession, claiming no right to be there except the fact that they had been sent there by one Wood, who was the attorney of Gray. They did not claim to be representatives of Gray, and they made no mention of Gray. It is not matter for surprise that Waskey believed, as he testified that he did, that these men were the advance guard of a set of men that were trying to overthrow his lease of the ground and take possession of it in some way or other. The proof which was offered and rejected would not have established their right to be there. For it might have been true that Gray was the owner of an undivided one-half interest in the mining claim, and that Waskey admitted his ownership and his right to have a representative on the ground, and that such a representative was on the premises at the time of the assault and had been there for three weeks prior thereto, and yet it would not follow that the plaintiff in error or Cummings had any right to enter upon the premises as the representatives of Gray or otherwise. Again, it is to be observed that the stated purpose and the only expressed purpose of the proffered testimony was to impeach the witness Waskey. It was not admissible for that purpose, for Waskey had not denied that he made the statement attributed to him which was embodied in the offer of proof.

It is contended that the court gave contradictory and inconsistent instructions, which were calculated to mislead the jury, to the prejudice of the plaintiff in error. The court instructed the jury as follows:

Digitized by Google

"A trespass merely against the property of another, not his dwelling house, is not a sufficient provocation to warrant the owner in using a dangerous weapon; therefore, if you find that defendant Johnston was representing any one having an interest in the lands mentioned, and that Johnston armed himself for the purpose of making an entrance on said lands, he would have no right to do so."

Again, the court instructed the jury as follows:

"You have nothing to do with the question of title, gentlemen, in your consideration of this case. If the ground were the defendant's and Waskey were in fact a trespasser, the law of Alaska provides a lawful way of obtaining possession of the property wrongfully withheld by another, and therefore, if you find that the assault, if there was an assault within the definition I have given you, was committed as charged, you will give no heed whatever to the question of who owned the ground."

And again:

"The person or persons in actual foot possession of the ground mentioned in the testimony had a right to command any intruder to depart, and, if he refused, to eject him from the premises by the use of sufficient physical force," etc.

It is said that in these charges the court in one breath instructed the jury that they had nothing to do with the question of title, and in the next said that if they found that the plaintiff in error was representing any one having an interest in the lands mentioned, and that he armed himself for the purpose of making an entry on said lands, he would have no right to do so. Upon the evidence the court was clearly right in charging the jury that they had nothing to do with the question of title in the case. Nor was there any error or inconsistency in charging that Johnston, even if he were representing the owner of an interest in the land, had no right to arm himself for the purpose of making an entry thereon. From the fact that one is the owner of an interest in land, it does not follow that he shall have the right to make an armed entry upon that land when the possession is exclusively and rightfully in another. The evidence was without dispute that Waskey had the exclusive and rightful possession. The presence on the premises of Gray's representative, Ryan, was evidently permitted by Waskey as a matter of grace and not of right, in order that Gray might have a witness to the clean-up.

It is contended further that the court erred in giving the instructions above referred to, in that he assumed therein as a fact that the revolver referred to as being in the possession of the plaintiff in error was a dangerous weapon within the contemplation of the statute. This particular feature of the instruction was not brought to the attention of the trial court, was not made the subject of an exception, and is not specified in the assignments of error. But aside from this, we do not find that the instructions were, on the ground suggested, justly subject to criticism. It was the contention of the prosecution that the revolver used by the plaintiff in error was a dangerous weapon. The court instructed the jury as to the right of the plaintiff in error to commit an assault with a dangerous weapon, and said:

"If, however, you should find from the evidence that the revolver used by Johnston was a dangerous weapon under the circumstances of its use at the

Digitized by Google

time of the affray, then you would not be justified in rendering a verdict of simple assault."

Error is assigned to the language of the district attorney during his closing argument to the jury as follows: "Then came this man Johnston, this hired gun-fighter, this hired ruffian." Timely exception was taken to this language by counsel for the plaintiff in error, but the record discloses no request to the court to instruct the jury in regard to the same, and, since the record does not contain the whole of the charge to the jury, we do not know that the court did not in fact give such instruction. The use of language by counsel, calculated to prejudice a defendant and not justified by the evidence, is improper and censurable, and should be discountenanced by the court. In such a case, it is the duty of the trial court to set aside the verdict unless satisfied that the improper language was not instrumental in securing it. But invective based on the evidence and inferences legitimately to be derived therefrom are not inhibited, and it is usually within the discretion of the trial court to determine whether or not the limits of professional propriety have been exceeded. Ordinarily the exercise of that discretion will not be reviewed in an appellate court unless the invective is so palpably improper that it may be seen to have been clearly injurious. State v. Brooks, 92 Mo. 542, 589, 5 S. W. 257, 330; State v. Calhoun, 72 Iowa, 432, 34 N. W. 194, 2 Am. St. Rep. 252; State v. Griffin, 87 Mo. 608, 615; People v. Perriman, 72 Mich. 184, 40 N. W. 425; State v. Emory, 79 Mo. 461. We are not convinced that the language so used by the district attorney was such as to justify the reversal of the judgment. The plaintiff in error and his companion came upon the mining claim armed with revolvers and in the hire of another. They were intruders upon Waskey's rightful and peaceable possession. They came with the evident intention of using their weapons with deadly effect in case their unlawful intrusion were interfered with. We cannot say that it was beyond the permissible limit of argument and invective to refer to them as "hired ruffians and hired gun-fighters."

Error is assigned to the refusal of the court to give to the jury certain instructions which were requested on behalf of the plaintiff in error. We cannot consider this assignment, for the reason that the whole of the charge given by the court to the jury is not in the record. Where the record does not contain the whole charge, it will be presumed that the court properly charged upon every branch of the case, and it will be presumed that further instructions were given to correctly modify erroneous instructions shown by the record, if it is very clear that these could have been so corrected and the record is incomplete. Bennett v. Harkrader, 158 U. S. 441, 15 Sup. Ct. 863, 39 L. Ed. 1046; Northern Pac. Ry. Co. v. Tynan, 119 Fed. 288, 56 C. C. A. 192, and cases there cited.

We find no error for which the judgment should be reversed. It is accordingly affirmed.

ROSS, Circuit Judge, dissents.

Digitized by Google

(154 Fed. 478.)

In re GRAESSLER & REICHWALD.

CONSANI v. BRANDON.

(Circuit Court of Appeals, Ninth Circuit. May 20, 1907.)

No. 1,410.

1. BANKRUPTCY—PROCEEDINGS TO REVISE IN MATTERS OF LAW—SCOPE.

Bankr. Act July 1, 1898, § 24b, c. 541, 30 Stat. 553 [U. S. Comp. St. 1901, p. 3432], giving Circuit Courts of Appeals authority to superintend and revise in matters of law, was intended to provide a summary method of revising the orders of courts of bankruptcy on questions of law, and does not contemplate any review of facts.

2. SAME—JURISDICTION OF COURT—SUMMARY PROCEEDINGS FOR SURRENDER OF ASSETS.

Where property of bankrupts was taken on a void attachment and the proceeds paid to the plaintiff on a judgment against the bankrupts, recovered by default several weeks after the filing of their petition in bankruptcy, which fact was known to the plaintiff, a referee has authority under Bankr. Act July 1, 1898, § 2 (7), and section 67f, c. 541, 30 Stat. 546, 565 [U. S. Comp. St. 1901, pp. 3421, 3450], to make a summary order requiring such proceeds to be paid over to the trustee.

3. SAME—COMMITMENT FOR CONTEMPT.

Where an order by a referee requiring a person to turn over money to a trustee in bankruptcy was within his lawful authority, the District Court has power to commit such person for contempt for refusal to obey such order.

Petition for Revision of Proceedings in the District Court of the United States for the Northern District of California, in Bankruptcy.

Presenting his petition under the provisions of section 24b of the bankruptcy act of July 1, 1898, c. 541, 30 Stat. 553 [U. S. Comp. St. 1901, p. 3432], the petitioner alleges that on or about March 15, 1906, he was ordered to appear before the referee in bankruptcy and show cause why he should not be ordered to pay to the trustee in bankruptcy the sum of $395.96, alleged to have been received by him upon an execution against the property of the bankrupts within four months after the filing of the petition in bankruptcy; that in response to said order petitioner appeared before the referee and objected to his jurisdiction to make the order, on the ground that the remedy was an independent suit to recover said money, and that the referee had no jurisdiction in a summary proceeding to order the petitioner to surrender the same; that the referee proceeded to the hearing of the order to show cause, and on April 17, 1906, made an order directing the petitioner to pay said money to the trustee; that on or about October 1, 1906, the trustee filed in the District Court for the Northern District of California his petition for an order to show cause why the petitioner herein should not be punished for contempt for failing to obey the said order of April 17, 1906; that to said order the present petitioner filed a written and verified answer; that on November 14, 1906, said District Court adjudged the petitioner guilty of contempt, and ordered that he pay said sum of $395.96 within 10 days, or be confined in the county jail until the order was complied with, unless sooner released by the order of said court.

The petitioner alleges that the said District Court erred in adjudging him guilty of contempt, and in holding that the referee had jurisdiction to make the order, the violation of which was held to be contempt.

Albert P. Wheelan and Louis Ferrari, for petitioner.

William A. Coulter, for respondent.

Before ROSS and GILBERT, Circuit Judges, and HUNT, District Judge.

Digitized by Google

GILBERT, Circuit Judge (after stating the facts). Section 24b of the bankruptcy act of July 1, 1898, c. 541, 30 Stat. 553 [U. S. Comp. St. 1901, p. 3432], gives the Circuit Courts of Appeals authority to superintend and revise in matters of law the proceedings of the several inferior courts of bankruptcy within their jurisdiction. It was intended thereby to provide a summary method for revising the orders and decisions of courts of bankruptcy upon questions of law, and the section does not contemplate any review of facts. In re House, Hazard & Co., 91 Fed. 96, 33 C. C. A. 356; In re Purvine, 96 Fed. 192, 37 C. C. A. 446; In re Whitener, 105 Fed. 180, 44 C. C. A. 434. The only question, therefore, presented for our consideration on this petition is whether the proper remedy of the trustee to recover the money which was obtained by the petitioner was a plenary suit in court or a summary proceeding such as he adopted. If the property had been in the adverse possession of the petitioner before the bankrupts filed their petition to be adjudicated bankrupts there can be no doubt that a plenary suit would have been necessary. But assuming, as we may under the record, the facts to have been, as it is claimed by the respondent herein that they were, that certain property of the bankrupts was taken upon a void attachment and that the money realized on the sale thereof was paid to the petitioner on a judgment entered in his favor by default against the bankrupts several weeks after they had filed their petition in the District Court to be adjudicated bankrupts, and that this was known to the petitioner, we think there can be no question that under the provisions of section 2 (7) and section 67f of the bankruptcy act, authorizing the referee to compel the surrender of funds to the trustee, the proceeding had before the referee in this case was permissible. Bryan v. Bernheimer, 181 U. S. 185, 21 Sup. Ct. 557, 45 L. Ed. 814; Mueller v. Nugent, 184 U. S. 1, 22 Sup. Ct. 269, 46 L. Ed. 405; In re Breslauer (D. C.) 121 Fed. 910; In re Goldberg (D. C.) 121 Fed. 578. And, if the referee could lawfully make the order, it follows that the court below could deal with the petitioner as for contempt, and commit him to imprisonment for refusal to obey the order. Mueller v. Nugent, 184 U. S. 1, 22 Sup. Ct. 269, 46 L. Ed. 405; Ripon Knitting Works v. Schreiber (D. C.) 101 Fed. 810.

There is nothing in the petition or in the record which is before us to show that the referee acted without jurisdiction, or that there was error in the order of the District Court.

The application for revision is denied, and the petition is dismissed.

Digitized by Google

(154 Fed. 450.)

PACIFIC MAIL S. S. CO. v. IVERSON et al.

(Circuit Court of Appeals, Ninth Circuit. May 6, 1907.)

No. 1,375.

1. SEAMEN—BREACH OF CONTRACT BY SHIPOWNER—DAMAGES.

Libelants shipped as seamen on board a steamship of respondent's for a voyage of nine months from San Francisco to Siberia and return. The ship carried a contraband cargo, and was captured by the Japanese and taken with her crew to a Japanese port, where the crew were released prior to the expiration of their term of service. Respondent furnished them tickets for steerage transportation to San Francisco on another of its vessels. On reaching Honolulu libelants went on shore, and, because of a regulation of the Marine Hospital service, made because it was at the time an infected port, they were not allowed to return to the ship, and their effects were thrown upon the pier, where some of them were lost. Libelants were left without money, and respondent's agent refused to assist them or pay them wages due. After they had employed counsel to bring a suit, respondent offered to take them to San Francisco on another vessel, which offer they then refused. It appeared that they left the ship without objection on the part of the officers and without knowledge of the port regulation. *Held* that, while respondent was not liable for any delay in taking libelants to San Francisco, their term of service not having expired, it was responsible for their support in the meantime, and was liable for the loss and damage to them consequent upon its refusal to recognize such obligation and for the loss of their clothes.

2. ADMIRALTY—COSTS.

A court of admiralty has no power to allow costs other than those provided for by statute, unless for an expense incurred under its order, and, there being no statutory provision for the allowance of mileage to a proctor in attending on the taking of depositions, no such allowance can be taxed as costs.

Appeal from the District Court of the United States for the Territory of Hawaii.

In August, 1905, a crew was shipped on the appellant's steamship Barracuda at San Francisco for a voyage of nine months to Siberia and return. The Barracuda carried salt, a contraband of war, and was captured by the Japanese and taken with her crew to a Japanese port. The crew were subsequently released in the city of Yokohama. There they were furnished by the captain of the Barracuda with steerage transportation from that port to San Francisco on the Mongolia, another of the appellant's steamships. On October 18, 1905, some 35 of the members of the crew, including the appellees herein, were received on board the Mongolia, and two days later there was issued to each of them a steerage check or ticket in form as follows:

"(2-1-05-3M) S. G. 63.

"Pacific Mail Steamship Co.
"Steerage Check.

"Steamer: Mongolia. Voy. 7.
"Name: A. Iverson.
"From Yokohama to San Francisco.
"No. Ticket: 9104.

"A. E. Rennie, Purser.

"Good for this trip only. To be shown and returned when called for."

The Mongolia arrived at Honolulu on October 27, 1905. At that date, Honolulu was an infected port, and under a promulgated regulation of the United States Marine Hospital service, through steerage passengers on ships destined for ports on the Pacific Coast of the United States were not allowed to come ashore, and, if they did come ashore, were not allowed to return to the ship.

Digitized by Google

Of the men of the Barracuda's crew, seven, including the appellees, went ashore. They were refused permission to return on board, their effects were thrown upon the dock, whereby some of their clothing was lost, and on October 28, 1905, the Mongolia departed for San Francisco. Libels were filed by six of these men, alleging a breach of the contract of carriage of the Mongolia from Yokohama to San Francisco. The defense was, first, that under the circumstances, and in view of the relation existing between the appellant and the appellees, a voluntary quitting of the vessel by the latter released the former of its obligation to give them a continuous passage to San Francisco on the Mongolia, and that its subsequent offer to carry them by its next steamer absolved it from all claim of damages; and, second, that, if there were a contract for a continuous carriage on the Mongolia from Yokohama to San Francisco, the appellant was released therefrom by reason of the voluntary violation by the appellees of the regulations of the Marine Hospital service. The causes were combined in the court below, and upon the evidence the court found for the appellees and awarded each thereof damages in the sum of $150.

E. B. McClanahan, Knight & Heggerty, and Kinney, McClanahan & Derby, for appellant.

Geo. A. Davis, for appellees.

Before GILBERT and ROSS, Circuit Judges, and HUNT, District Judge.

GILBERT, Circuit Judge, after stating the case as above, delivered the opinion of the court.

The appellant contends that the decision of the court below is against the evidence in the case and contrary to law and equity. The appellees had shipped on the Barracuda for a nine months' voyage. That voyage having been interrupted by the confiscation of their ship, they were entitled to be returned to San Francisco at the cost of the appellant. The appellant, recognizing this liability, furnished them transportation from Yokohama to San Francisco on another of its ships, the Mongolia. In view of the fact that the term for which the appellees had shipped had not expired, and would not expire for several months, the appellant was under no obligation to carry them back to San Francisco by the Mongolia or by any particular ship or by a continuous voyage. It would have been no breach of its obligation if, on the arrival of the Mongolia at Honolulu, the appellant had required the appellees to go ashore and remain there until its next ship sailed from that port, provided that it made arrangements for their board and lodging and other necessary expenses in Honolulu while so waiting. The evidence is conflicting as to the circumstances under which the appellees went ashore at Honolulu. There is testimony on behalf of the appellant that they were notified of the Marine Hospital service regulation and were forbidden to go ashore. On the other hand, each of the appellees testified that he neither heard nor knew of any such regulation or interdiction. The trial court gave careful consideration to the evidence on this branch of the case, and reached the conclusion that the facts were as stated by the appellees. Upon an examination of the evidence, which we have made in view of the fact that the testimony was taken before a commissioner, and not in open court, we find no ground to disturb the finding of the court below.

It being established, then, that the appellees left the ship without objection on the part of the appellant or notice of the Marine Hospital service regulation, the question arises whether there was a breach of

Digitized by Google

contract on the part of the appellant in refusing them permission to re-enter the ship and in leaving them in Honolulu without money and without making provision for their maintenance. The evidence shows that the appellees on October 27th, after they had been refused permission to re-enter the ship, presented themselves and offered to be fumigated in accordance with the Marine Hospital service regulations, and again presented themselves at a later hour of the same day and again on the following morning for the same purpose, and did everything in their power to comply with the regulations so as to be entitled to be received on board. After the departure of the Mongolia on October 28th, the appellees called on the agent of the appellant at Honolulu to ascertain what the appellant would do for them, and were refused assistance. One of them applied for a payment on account of wages due him, which was also refused. They had no money or other resources. The night of October 27th they were without a place to sleep and without provisions. On the following night arrangements were made with Chillingworth whereby, upon his order, they obtained board and lodging at the Sailors' Home. They had incurred an expense to Chillingworth of $142 at the time of giving their evidence. About October 30th, and after the appellees had entered into an arrangement with their counsel to libel the ship for damages, the appellant's agent at Honolulu told them that they would be sent to San Francisco on the China, and that their expenses at the Sailors' Home would be paid by the appellant. The offer was refused by the appellees for the reason that they had assumed obligations for legal advice. In view of all these circumstances, we are not prepared to say that there was error in the decree of the trial court. The appellants should be held responsible for the privation suffered by the appellees during the time when they were without food or lodging, and for the loss of a portion of their clothing, together with the expense which they incurred for counsel before responsibility for their support was admitted or any offer was made to take them on to San Francisco upon the next ship. For all these items we cannot say that the sum allowed each appellee by the court below was excessive.

On the taxation of the costs in the court below, the clerk allowed $205 for mileage and expenses of the proctor for the appellees in going from Honolulu to San Francisco to attend there upon the taking of depositions for the appellant. On appeal to the court, the allowance of this item was affirmed. That ruling is assigned as error. While costs in admiralty are within the discretion of the court and may be allowed or denied on equitable considerations, the amounts and items of the costs allowable are not within the court's discretion but are fixed by statute. The court has no power to allow costs other than the statutory costs, except in cases where expense has been incurred in the conduct of the case, under the order of the court. Jacobsen v. Lewis Klondike Expedition Co., 112 Fed. 73, 50 C. C. A. 121; Simpson v. 110 Sticks of Hewn Timber (D. C.) 7 Fed. 243; Dennis v. Eddy, 12 Blatchf. 195, Fed. Cas. No. 3,793. As there is no statutory provision for the allowance of mileage as taxed in the court below, the decree is as to that item reversed. In other respects the decree is affirmed, with costs to the appellees.

Digitized by Google

(154 Fed. 453.)

GOURDAIN v. UNITED STATES.

(Circuit Court of Appeals, Seventh Circuit. April 16, 1907.)

No. 1,297.

1. POST OFFICE—USE OF MAILS TO DEFRAUD—INDICTMENT.

An indictment for using the mails to defraud, in violation of Rev. St. § 5480 [U. S. Comp. St. 1901, p. 3696], by subdividing a tract of land in Louisiana of small value into lots 10 or 20 feet square, and selling certificates, each purporting to give the holder an option to purchase an interest in a lot, upon false representations that the lots were within an oil district and very valuable, and that large cash offers had been made for certain of the same, construed, and *held* to charge a scheme and artifice to defraud within the meaning of the statute, which, when carried on by means of correspondence through the mails, constituted a violation thereof.

2. INDICTMENT—DUPLICITY.

Averments in an indictment that artifices used in furtherance of a scheme to defraud, to be carried on through the use of the mails, were intended to give one understanding of the scheme to one class of investors and another and different understanding to a different class, both being deceived and defrauded by the same artifices, do not make out two separate schemes so as to render the indictment bad for duplicity.

[Ed. Note.—For cases in point, see Cent. Dig. vol. 27, Indictment and Information, §§ 334-400.]

3. CRIMINAL LAW—TRIAL—INSTRUCTIONS—REQUESTS.

Where the charge of the court in a criminal case was correct and clear in the interpretation of the statute and the definition of the issues and the burden and measure of proof required to authorize conviction, without detailing or reviewing the evidence, the refusal of requests referring to and predicated upon different phases of the evidence was not error.

[Ed. Note.—For cases in point, see Cent. Dig. vol. 14, Criminal Law, §§ 1958, 2005.]

4. SAME—MOTIONS FOR NEW TRIAL AND IN ARREST—REFUSAL TO HEAR ARGUMENT.

The overruling, instanter, of motions for new trial and in arrest of judgment in a criminal case, which raised only questions that were considered during the trial, and the refusal to hear argument or to grant an extension of time to prepare and file written motions and specifications, was not a refusal to consider such motions nor a denial to defendant of any right.

In Error to the District Court of the United States for the Eastern Division of the Northern District of Illinois.

The plaintiff in error, Louis A. Gourdain, was indicted, with one John H. Dalton, for violations of section 5480, Rev. St. (U. S. Comp. St. 1901, p. 3696), and upon joint trial both were convicted. This writ of error is prosecuted from the judgment thereupon against the first-named defendant. The indictment contains three counts, averring like schemes to defraud—that described under the first and second counts, stated as carried on under the name of "Louisiana State Loan & Trust Company of New Orleans, La.," and under the third count as "Louisiana Trust Banking Company." Each count is voluminous in description of the scheme and means, and the only substantial difference is in the letters alleged to be mailed in execution thereof, and in the location of lands and size of lots referred to under one and the other name.

The averments of the first count are summarized in the briefs for the plaintiff in error as serving for all questions raised, and such summary is adopted, in substance, for this statement, as follows:

The count charges that Gourdain and Dalton within the jurisdiction of the court had devised a scheme and artifice to defraud one Charles H. McClees

Digitized by Google

(with residence described) and a class of persons then resident within the United States not capable of being resolved into individuals and not capable by means of their great number and of want of information on the part of the grand jurors of being all named in the indictment; that is to say, such of the persons being desirous of purchasing tickets and chances in a lottery and tickets and chances in an enterprise similar to a lottery, and of investing small sums of money in gambling enterprises and in speculative enterprises and in oil lots and options on oil lots and interests in oil lots, as they, the said Gourdain and Dalton, should induce to purchase what they called "options" on lots and interests in the same, in the Wynn oil lots, situated in the parish of Wynn, in the state of Louisiana.

The scheme was a scheme and artifice to defraud the said persons so intended to be defrauded, by promoting and conducting a fraudulent enterprise under the name of the Louisiana State Loan & Trust Company of New Orleans, La., by purchasing a large tract of land in Louisiana (1,000 acres of little value, namely, $1.50 per acre), and platting the same into a large number of small lots 20 feet square under the name of "Wynn Oil Lands," and by offering for sale and selling to the persons so intended to be defrauded options on and whole interest in one of said lots for $20, and fractional interests at proportional prices, and by sending such persons certificates to evidence the sale of options which would purport on their faces to be merely certificates of such options, but which certificates in general appearance would so closely resemble ordinary lottery tickets, and would contain such indicia and earmarks of lottery tickets and of tickets in an enterprise similar to a lottery, that they would cause those persons familiar with lottery tickets who should see the certificates to believe that they were either lottery tickets or tickets in an enterprise similar to a lottery; so that such persons would be caused to believe that the reference to options on oil lots was a mere subterfuge to evade the law against lotteries and like enterprises; and by issuing and sending monthly to the same persons to whom the certificates would be sent lists which would purport on their face to be reports of prices which had been bid for lots, which would resemble ordinary lottery lists, commonly published and sent out by the promoters of regular lotteries; and by causing all of the literature sent out by the said Gourdain and Dalton in conducting such enterprise to resemble in general appearance ordinary lottery literature. By means of such resemblance and similarity of the certificates to regular lottery tickets and the similarity of lists to regular lottery lists and the similarity of literature to regular lottery literature, and by the further means of false representations and false pretenses to the effect that such enterprise was conducted in a fair, square, and honest manner, and had paid sums of money to some of its patrons, to cause said last-mentioned persons to believe that said lottery, or enterprise similar to a lottery, had fair, square, and honest drawings and paid large and capital prizes; whereas, in truth and in fact, the said enterprise was not intended by them and would not be either a lottery or an enterprise similar to a lottery which had fair, square, and honest drawings and paid large and capital prizes, and the said certificates were not intended to be and would not be lottery tickets in an honest and fair lottery, nor in an enterprise similar to a lottery having fair and honest drawings and paying large and capital prizes; but, on the contrary, it was intended by the said Gourdain and Dalton that the enterprise should not be either a lottery or an enterprise similar to a lottery which had honest and fair drawings and which paid large and capital prizes; and it was then intended that said enterprise should not have honest and fair drawings and should not pay large and capital prizes. And the grand jurors present that they do not know and cannot state the method and manner by which said Gourdain and Dalton intended to determine and did determine which of the said persons purchasing the said certificates should be paid small prizes; but the grand jurors say the said Gourdain and Dalton did intend to pay and did pay to some of the persons who should and did purchase said certificates small prizes, ranging from $5 to $50, and that the small prizes were intended to be paid and were paid as a bait to induce those persons to whom they were paid and others of the said last-mentioned persons to purchase the said certificates. And that as a part of the said scheme and artifice said

Digitized by Google

Gourdain and Dalton intended by the means aforesaid, that is to say, by causing those of the said persons intended to be defrauded, who were familiar with lotteries, etc., to believe that the said enterprise was either a lottery or an enterprise similar to a lottery, and that the certificates were either lottery tickets or tickets in an enterprise similar to a lottery, that had fair, square, and honest drawings and paid large and capital prizes, as aforesaid, and by paying small prizes, as aforesaid, to induce such last-mentioned persons, respectively, to purchase of them under the name aforesaid the said certificates, and to induce said last-mentioned persons to send and pay their moneys to the said Gourdain and Dalton under the said name of Louisiana State Loan & Trust Company. And that the said Gourdain and Dalton intended by this means to obtain possession of such money as should be so sent to them under the name aforesaid, or under any other name, for purchasing such certificates, and all or a part of the said money to convert to their own uses without rendering anything or service of value to said last-mentioned persons therefor, and thereby to defraud those said persons of the same. The exact part and amount of which said moneys they intended to convert to their own use are to the grand jurors unknown. And the said Gourdain and Dalton intended that a large majority of said persons who should purchase said certificates should receive nothing whatever of value in return for the moneys which they should pay for said certificates, and intended that what small amounts they should pay to such purchasers of said certificates as small prizes, as aforesaid, should be paid to said purchasers as a bait to induce them and other persons to purchase other of said certificates.

And the grand jurors further present that, as a part of said scheme and artifice to defraud, it was intended by said Gourdain and Dalton that said certificates, lists, and literature, so to be sent out by them, should cause the said persons intended to be defrauded to whom they were to be sent, who were not familiar with lotteries, lottery tickets and literature, to believe that the said enterprise, conducted under the name of the Louisiana State Loan & Trust Company, was an honest, fair, and legitimate enterprise for the sale of oil lots and options on the same. That for the purpose of causing the last-mentioned persons, so as aforesaid intended to be defrauded, to so believe as aforesaid, and for the further purpose of causing said last-mentioned persons to believe that large sums of money could be made by them, the said last-mentioned persons, by purchasing said options, they, the said Gourdain and Dalton, intended in the promoting and conducting of said enterprise to falsely represent and pretend to the last-named persons in effect that said lots were of great value, were located in an oil district, that oil had been discovered and found in that immediate district and locality; that large sums of money had been bid in good faith for numerous ones of said lots respectively, and numerous persons had ordered their respective interests owned by them in different ones of their said lots to be negotiated for large sums of money; that large sums of money had been made by different persons who had purchased options on said lots, and that there had been bid in good faith in cash prices for 1,194 of the lots mentioned an aggregate sum of $1,210,000, and prices for several lots mentioned, ranging from $300,000 a lot downward to $1,000.

And the grand jurors further present that, as said Gourdain and Dalton well knew, said lots were not of great value, nor located in a district where valuable oil had been found in paying quantities, and were not oil lots, nor situated in an oil plat, and no oil had been found in that immediate district, nor anywhere in that vicinity, and no large sums of money had been bid in good faith for any of said lots, and no person had ordered their respective interests negotiated for large sums of money, as they, the said Gourdain and Dalton, intended to falsely represent and pretend in effect, as aforesaid, to the said last-mentioned persons who were not familiar with lotteries, etc. And, as a part of said scheme and artifice, that the said Gourdian and Dalton, by means of said false representations and pretenses, intended to induce said last-mentioned persons who were not familiar with lotteries to purchase of them the said certificates and send and pay their money for the said certificates to said Gourdain and Dalton, under the name and style aforesaid; and that by this means they intended to obtain possession of such money to be sent and

Digitized by Google

paid to them under the name aforesaid, or under any other name, by the last-mentioned persons for purchasing said certificates and options, and all or a part of the said moneys to convert to their own uses without rendering any thing or service of value to the said last-mentioned persons therefor, and thereby to defraud those said persons of the same. The exact part and amount of which moneys which the said Gourdain and Dalton intended to convert to their own use, as aforesaid, are to the grand jurors unknown.

The said scheme and artifice to defraud was a scheme and artifice which they, the said Gourdain and Dalton, when so devising the same, and when committing the offenses mentioned, intended to effect and was to be effected by opening correspondence and communication by means of the post-office establishment of the United States, etc. And the grand jurors present that said Gourdain and Dalton, on April 5, 1905, so having devised the said scheme and artifice in and for executing the same and attempting so to do, and for defrauding by and through such scheme the said Charles M. McClees, who was one of the persons so intended to be defrauded, did place in the post office of the United States, at Chicago, etc., a letter which is described.

Other proceedings and facts upon which error is assigned are mentioned in the opinion in so far as deemed material.

W. Knox Haynes, for plaintiff in error.

Frank G. Hanchett, for defendant in error.

Before GROSSCUP, BAKER, and SEAMAN, Circuit judges.

SEAMAN, Circuit Judge. The various errors assigned and pressed in the argument for reversal of the judgment against the plaintiff in error, Louis A. Gourdain, are reducible to these propositions: (1) That violation of the statute is neither charged by apt averments in the indictment, nor established by the evidence; (2) that the court erred in the denial of instructions requested on behalf of the plaintiff in error; and (3) that error was committed after verdict upon motions for new trial and in arrest of judgment. Consideration of the theory upon which each of the general propositions rests is deemed sufficient to solve the questions raised by the assignments respectively.

1. The sufficiency of the indictment was challenged, both by demurrer and by several subsequent motions; and, upon motion for direction of verdict in favor of the accused and motion for a new trial, the contention as well of insufficient proof was presented. The objections to the indictment are variously set out and reiterated in the arguments of counsel, from which we deduce, as their ultimate contentions: (a) that it is without distinct averments of the scheme and means for defrauding, stating "wherein the fraud consisted and the facts and circumstances by which it was to be accomplished;" (b) that there are no averments of intention to induce purchasers to believe that there were to be lottery drawings or prizes, or that they would participate in such drawings or prizes, nor averments that such drawings would not be had; (c) no averment of "facts constituting intended unfairness, dishonesty, or fraud in drawings;" (d) and no averments that "large sums of money could not be made by purchasing options," nor that the scheme "was not a fair and legitimate enterprise for the sale of options," nor that options offered "were not of value"; (e) that the averment that the method and manner of determining "the persons to whom the prizes (or the prices) were to be given," under the scheme, is unknown, renders the indictment bad; (f) that each count is void

Digitized by Google

for uncertainty and (g) for duplicity in stating two distinct schemes and means to defraud to operate on two separate classes of persons, with no overt act specified under either.

The scheme and means which are stated in the indictment and established by proof are undeniably artful, elaborate, and complex, so that the framing of charges thereupon was not free from difficulty; and the counts may well be open to the criticism of diffuseness, if not of indefiniteness in reference to the objects and methods of the proposed "drawings," either as the operators intended to carry them out, or as the various devices were calculated to be understood by customers. Nevertheless, the requirement is elementary that an indictment must fully and accurately describe an offense committed by the accused within the statute, and substantial failure in any of these essentials is a fatal objection at any stage. The statute (section 5480, Rev. St.) denounces as a crime the execution of a scheme or artifice to defraud "by means of the post-office establishment," and the test to be applied to the averments in this indictment is, whether they sufficiently describe and state a scheme to defraud, so intended and executed by the plaintiff in error—a scheme "to entrap the unwary, and to secure money from them on the faith of a scheme glittering and attractive in form, yet unreal and deceptive in fact, and known to him to be such." Durland v. United States, 161 U. S. 306, 312, 16 Sup. Ct. 508, 40 L. Ed. 709.

Their insufficiency to charge a scheme to defraud is contended upon the view, substantially, that the facts stated make out a mere lottery or gambling enterprise, with no deception of customers; and that no facts are stated of actual or intentional deception, so that none can "be supplied by implication." Consonant with that view, it is further stated in the brief for the plaintiff in error, in reference to the evidence, that it "shows conclusively that the enterprise was a gambling enterprise solely. That it was so understood by all persons who saw the literature or dealt with defendants, and that it was so intended to be understood by the operators. The gamble (so called) was carried on fairly and not fraudulently; that patrons were not misled or defrauded; that no intent existed to deceive patrons; that the form of the tickets, sheets, etc., was only to deceive or confound the officers of the law, and thereby evade the law against lotteries and other form of gambling." We are satisfied that these contentions of insufficient averments of fact in the several counts are without merit, and that facts constituting a fraudulent scheme, within the meaning of the statute, are stated and described in unmistakable terms, when each count is read as a whole. Conceding that unnecessary particularity and repetitions appear in the averments, each distinctly describes a scheme and means used to carry it out—the scheme intended to obtain money from the credulous and unwary, without substantial consideration in any sense, and no actual promise to return anything of substantial value, while the means are described to be intended and adapted as bait to attract one or the other class of persons mentioned, and to impose upon and deceive indiscriminately all who became investors—and the complete execution is set out. The scheme, as averred, was the ownership of purported oil-producing lands in Louisiana, subdivided in lots of 10 or 20 feet square—which lands

Digitized by Google

were neither oil-producing, nor in oil-producing districts, and were of little value, even in the aggregate—whereupon certificates were issued purporting for the sum paid therefor to give the option to purchase, for a further sum named, one twentieth or other named fractional interest in one of the lots. Money derived from sale of these certificates (as averred) was intended to be and was converted to the uses of the accused, "without rendering anything or service of value" to the purchaser. The scheme thus described was not a "lottery" or a "gambling enterprise," but plainly a fraud, and within the statute if means were used through the mails which deceived the purchasers and were so intended.

The means for executing the fraud and their purpose and effect are fully described. In the one phase, in reference to persons who are familiar with lottery and gambling schemes, the forms of certificates, of several lists of purported prices bid for lots, and of "successful investors," and other literature set out, are averred to so resemble those issued for lotteries that they were intended to be understood and were understood by such persons to represent lottery tickets in a lottery, or like enterprise "which had fair, square, and honest drawings, and paid large and capital prizes," but so disguised in form to evade legal restrictions; and such persons were thus attracted to become purchasers of the tickets or certificates offered. On the other hand, it is averred that persons not familiar with lotteries and the like, and not viewing the offer as one of lottery tickets and lists, were intended to be and were attracted and imposed upon by the offer as a speculation in oil-producing lots, with chances for great rise in value and ready sales. The averments, in substance, in reference to the first-mentioned phase, that the scheme and offer was not intended to be and was not a lottery or like enterprise "which had fair, square, and honest drawings and paid large and capital prizes," and that the tickets were not of that character or benefit, are sufficient, as we believe, to negative the assumed character of the scheme as a lottery or like enterprise, and of the offer as lottery tickets, by way of statement of the fact of falsity and of the fraud perpetrated, as designed, upon such purchasers. The derivation of the word "lottery" points out its general definition, as the "distribution of anything by lot," or "the drawing of lots"; and the scheme known as "lottery" is equally well defined, as one "for raising money by selling chances to share in a distribution of prizes," or a "scheme for the distribution of prizes by chance among persons purchasing tickets, the corresponding numbered slips, or lots representing prizes or blanks, being drawn from a wheel," etc. Century Dictionary. Lottery Case, 188 U. S. 321, 353, 23 Sup. Ct. 321, 47 L. Ed. 492. So if the scheme in question intended and gave no "fair, square and honest drawings" for prizes offered—and none other could be termed "drawings by lot"—it was not a lottery; the tickets issued are not lottery tickets, and the alleged deception of such purchasers is sufficienly stated without further description or attempt to give the artifice a name.

There are further averments in effect that it was intended, as a part of the scheme, to pay to some purchasers small sums or prizes, "ranging from $5 to $50," merely as a bait to induce further purchases, and such payments were made in some instances, but the method and manner

Digitized by Google

by which the accused "intended to determine and did determine which of the said" purchasers should be so paid as a bait was unknown and could not be stated. These averments are challenged as insufficient and uncertain. As above stated, the fact that the chances and methods of a lottery were not intended or given—that there was no determination by lot or fair chance in drawings—is sufficiently averred, as we believe; and these averments, if material are material only to show further artifices to entice purchasers. The fact of giving small prizes, by one-sided arbitrary selection among purchasers, to induce further custom, neither makes out a lottery scheme, nor tends to qualify the first-mentioned averments. The particular method of such one-sided choice may not be known or susceptible of adversary proof, but the fact that it is made arbitrarily (not by lot or chance) for the object averred may be provable circumstantially. However viewed, we are of opinion that the averments referred to do not affect the validity of the indictment.

The objections for indefiniteness and uncertainty of averments in reference to persons investing as a speculation offered in oil-producing lots or options therein are plainly untenable, as the facts of intentional deception and of worthless so-called "options" are stated with all needful particularity and certainty.

The contention of duplicity is thus stated in the brief for the plaintiff in error: That each count presents "two separate and distinct schemes to defraud," and separate "means of accomplishment," each scheme "to operate upon and defraud a separate and distinct class of people." Confusion of cause and effect is apparent in these propositions when the allegations are read as an entirety in each count. The scheme to defraud is described as single—to entice money from the credulous, whether of one or the other class of "speculators" referred to, with a single line of means or artifices adapted to appeal to the inclinations of either class, and one and the other thus enticed was equally deceived, as either understood the scheme from his point of view. Both purpose of the accused, and means for its accomplishment in either instance, were identical, and all who accepted the offer were alike defrauded of their money. The allegations in each count respecting the artifices that they were designed to give one understanding of the scheme to one class and another understanding to the other, so that neither was given the true meaning and each was deceived and defrauded by the same artifices, do not make out two separate schemes to defraud, but a single scheme calculated to entice in either view; and error is not well assigned for duplicity. We are of opinion that each count is sufficient to charge the plaintiff in error with violation of section 5480; and the contentions that the evidence is insufficient to support conviction are, as we believe, alike without merit. Comment upon the proof is unnecessary, beyond the remark that it impresses us to be consonant with the averments of an elaborate and subtle scheme to defraud, executed by the plaintiff in error, and adequate in all particulars for submission to the jury thereunder. The motion on behalf of the plaintiff in error for direction of a verdict of acquittal was rightly overruled.

2. Error is assigned upon portions of the instructions given to the jury, and for refusal to give sundry instructions requested on behalf of the plaintiff in error. In reference to the instructions which were given

Digitized by Google

no exceptions were taken and no reviewable question arises. Those which were requested and denied were 14 in number and voluminous in various definitions of the offenses charged, references to phases of the testimony with inferences to be drawn therefrom as to the nature or intent of the scheme, and directions to consider the evidence upon theories thus stated. Without extending this opinion to their review in detail, or to comment upon the correctness or incorrectness of various propositions or inferences embodied in one or the other, we deem it sufficient to state our conclusion that no error was committed in the denial of either requested instruction, upon the following premises: That the instructions which were submitted to the jury were correct and clear in the interpretation of the statute and definition of the elements and issues to be established by proof beyond reasonable doubt to authorize conviction; that, in so far as either requested instruction stated correctly propositions of law to be observed by the jury in considering the evidence, such rule was plainly and sufficiently embodied in the charge of the court; that the evidence was not detailed or reviewed by the court, but was submitted for determination by the jury, under the issues as defined, without comment upon its force or direction as to inferences of fact; that the course so adopted by the court was rightly adhered to, without following either the form or the matter of the requested instructions, when the rules of law applicable to the issues were fully stated; and that the accused was not entitled (Coffin v. United States, 162 U. S. 664, 674, 16 Sup. Ct. 943, 40 L. Ed. 1109) to the requested instructions upon the evidence referred to and inferences of fact thereupon.

3. The complaint that the court "refused to consider the motion for a new trial and the motion in arrest of judgment" remains to be considered. The right of the accused is unquestionable to have both of these motions entertained and to a ruling upon each by the court; and it is settled that denial of such right may constitute reversible error, although the motion for a new trial is addressed to the discretion of the court, and when that discretion is exercised the action thereupon is not reviewable. Clyde Mattox v. United States, 146 U. S. 140, 147, 151; 13 Sup. Ct. 50, 36 L. Ed. 917; Ogden v. United States, 112 Fed. 523, 526, 50 C. C. A. 380; Felton v. Spiro, 78 Fed. 576, 581, 24 C. C. A. 324. In this record, however, it appears that leave was granted to make and file both motions, and that each was overruled instanter, without hearing arguments or specifications of grounds. The contention is that such action infringed the rule referred to—was in effect a refusal to exercise the discretion of the court upon the motion for a new trial—and under the above-mentioned authorities cause for reversal, without reference to the merits of either motion. So, while no proposition was raised, under either motion thus overruled, which had not received careful consideration in the course of the trial—as remarked by the trial court in overruling the motion—reversal is sought upon the ground alone of denial by the court of further time to present and reargue such propositions. We are of opinion that the record establishes no violation of the wholesome rule upheld in the authorities cited, as the motion for a new trial appears to have been entered on behalf of the accused, upon suggestion and leave of the court, "to protect any rights

Digitized by Google

he may have," and was thereupon overruled, with an exception entered to such ruling by direction of the court. Subsequently, leave was given the accused to "file a written motion for a new trial with specifications of grounds," on the following day, as of the day of hearing; and the bill of exceptions states that the accused excepted to a "ruling of the court in refusing to permit" him to state the grounds for such motion, and "in refusing to consider said grounds," and for "refusing to hear argument on behalf" of the accused in support thereof. The record further states that the accused "moved the court that the judgment be arrested" and asked time to prepare written motion and specifications, but was refused such extension of time, and the court "also declined to hear argument in support of the motion."

This refusal of the trial court to grant time and hear further arguments upon questions which had been argued and considered throughout the trial appears to be the sole ground of complaint. Upon motion for a new trial, neither stay of proceedings nor extent of deliberation is prescribed by rule or authorities, and the course in each case necessarily rests in the exercise of judicial discretion under the circumstances presented. With no suggestion of cause arising after the case was submitted to the jury (as in Clyde Mattox v. United States, supra, and Ogden v. United States, supra), or of newly discovered evidence, and offer only to "show variance between the allegations in the indictment and the proof as presented"—appearing in the record on like prior motion on behalf of Dalton—error is not well assigned for mere denial of stay and rehearing upon such motion. The only question tendered for argument was raised and considered upon the trial. Such prior consideration was applicable as well to the motion, and presumptively was so applied by the court in overruling the motion—a ruling upon the merits, and not a refusal to entertain the motion without consideration.

As no reversible error appears, the judgment of the District Court is affirmed.

(154 Fed. 461.)

DALTON v. UNITED STATES.

(Circuit Court of Appeals, Seventh Circuit. April 16, 1907.)

No. 1,296.

1. POST OFFICE—SCHEME TO DEFRAUD—USE OF MAILS—EVIDENCE.

Where accused had been a party to a scheme to defraud during a period when the persons conducting the same had done so solely by means of express and telegraph companies, but was not shown to have had any connection with his former confederates after they commenced to unlawfully use the mails for such purpose, he was not guilty of violating Rev. St. § 5480 (3 U. S. Comp. St. 1901, p. 3696), prohibiting the use of the mails for the furtherance of a scheme to defraud.

[Ed. Note.—For cases in point, see Cent. Dig. vol. 40, Post Office, § 55.]

2. CRIMINAL LAW—PRESUMPTION OF INNOCENCE—EFFECT.

The presumption that accused would not remain a party to a conspiracy to defraud after his co-conspirators had adopted a criminal course by using the United States mails in furtherance of their scheme overcame the inference of fact that he was still a party to such conspiracy arising from proof of his former connection therewith.

Digitized by Google

In Error to the District Court of the United States for the Eastern Division of the Northern District of Illinois.

The plaintiff in error, John H. Dalton, was convicted with one Louis A. Gourdain, upon their joint trial under indictment for violations of section 5480, U. S. Rev. St. (3 U. S. Comp. St. 1901, p. 3696), and reversal is sought of the judgment thereupon against him. The indictment is the same described in the opinion upon the writ of error of the above-mentioned Gourdain (handed down herewith), and both cases are presented in a single transcript of record, under leave of this court, as the questions raised are identical, except in reference to evidence of participation in use of the mails for execution of the alleged scheme to defraud, and in minor particulars mentioned in this opinion. In the case referred to of Gourdain v. United States (No. 1,297) 154 Fed. 453, the averments of the indictment are sufficiently stated, and other material facts involved in this review are stated in the present opinion.

William S. Forrest, for plaintiff in error.
Frank G. Hanchett, for defendant in error.

Before GROSSCUP, BAKER, and SEAMAN, Circuit Judges.

SEAMAN, Circuit Judge. The errors assigned for reversal of this judgment against the plaintiff in error, Dalton, are numerous, and all questions raised are exhaustively and clearly presented in the arguments, printed and oral. The decision upon each of the various contentions in the case of the codefendant below (Gourdain v. United States, in opinion handed down herewith), in reference to the sufficiency of the indictment and of error in denial of instructions, is equally applicable here. The contentions are substantially identical, and in that view the arguments in both cases were carefully considered, so that the opinion there is referred to for like conclusion upon each proposition and assignment on behalf of this plaintiff in error thus predicated.

Upon the complaint, however, of the plaintiff in error, Dalton, that the evidence was insufficient for his conviction of the offense charged, the records are plainly distinguishable. The question was raised by his motion for a direction to acquit—and as well by subsequent motions—and is reviewable. As the gist of the offense charged is complicity in execution of the alleged scheme to defraud through use of the mails, the sole inquiry is whether the testimony was sufficient for submission to the jury upon that issue. The evidence tends to establish that the alleged fraudulent scheme originated in 1903, and for more than a year was carried on through the use of express and telegraph companies, with no use of mails appearing prior to April, 1905—the dates of mailing averred in the several counts. The connection of the accused with such scheme appears from testimony of conversations with him long prior to the offense charged, and from strong circumstantial evidence of his participation up to the autumn of 1904. But beyond the complicity so appearing, there is no proof of his presence or participation in the business during a period of about six months prior to the first use of the mails in evidence, or at any subsequent time. Moreover, while several witnesses state conversations with the plaintiff in error to arrange for transmissions of the (so-called) literature by express in 1903 and 1904, the record is without proof, not only of the fact of using the mails during those years, but

Digitized by Google

of facts to charge the plaintiff in error with purpose at such times to use the mails in execution of the scheme.

The occasion of this departure from the original means to carry on the scheme—presumptively not criminal—does not appear, nor the time when the change occurred, except from the dates of mailing the letters in evidence, with April 5, 1905, as the earliest date; and the evidence which connects the codefendant, Gourdain, with these transactions, under the change in plan, is not applicable to convict the plaintiff in error of participation therein, as the essence of the offense charged, without further proof tending to establish his connection after such departure. In thus seeking use of the mails for the fraudulent scheme, section 5480 was obviously violated, while the scheme and operation during 1903 and 1904, when the plaintiff in error appears as a party, however obnoxious otherwise, was (presumptively) free from the offense charged not within the statute referred to. The chain of circumstances tending to establish his relation before the change to prohibited methods cannot serve, in the absence of a connecting link of proof, to raise an inference of fact that he not only continued in the operation during the intervening months, but deliberately joined in the criminal conduct then inaugurated.

The rule for which counsel contends in support of the submission to the jury of "the inference or presumption of continuance arising from the facts and circumstances proven" is inapplicable, as we believe, in any view of the strength of "the presumption of innocence, as evidence in favor of the accused, introduced by the law in his behalf" (Coffin v. United States, 156 U. S. 432, 458, 460, 15 Sup. Ct. 394, 39 L. Ed. 481), under these changed conditions. With the chain of evidence incomplete to connect the accused with such criminal change of course, by presence, acquiescence, or other coincident circumstance, the citations from the ruling and opinion in Dunlop v. United States, 165 U. S. 486, 503, 17 Sup. Ct. 375, 41 L. Ed. 799, are not deemed applicable; and we are not satisfied that facts were presented to authorize an inference that the plaintiff in error remained in the venture at and after the change. Under the established rule of our criminal law, however, as well defined in Coffin v. United States, supra, the "presumption of innocence is an instrument of proof created by the law in favor of the accused," and the presumption that the accused would not remain in the concern when it turned into a criminal course would set aside or overcome the assumed inference of fact relied upon.

We are of opinion, therefore, that error is well assigned for the above-mentioned cause, which includes the exceptions to the charge, in so far as the issues against the plaintiff in error were submitted to the jury. The errors assigned upon the record in respect of the motions for a new trial and in arrest of judgment require no discussion in view of the opinion in the Gourdain Case, supra, as the differences in the records are not deemed substantial.

The judgment of the District Court is reversed, accordingly, and the case remanded with direction to grant a new trial.

Digitized by Google

(154 Fed. 480.)

BUSH v. PIONEER MINING CO. et al.

(Circuit Court of Appeals, Ninth Circuit. May 20, 1907.)

No. 1,409.

APPEAL—REVIEW—DISCRETION OF COURT—INJUNCTION—PRELIMINARY INJUNCTION.

The discretion of a court in granting or refusing a preliminary injunction, where the evidence is conflicting and the rights of the parties cannot properly be determined except on final hearing, is not subject to review by an appellate court unless there has been a plain disregard of facts or of settled principles of equity.

[Ed. Note.—For cases in point, see Cent. Dig. vol. 3, Appeal and Error, § 3818.]

Appeal from the District Court of the United States for the Second Division of the District of Alaska.

Clay Allen and Hobbes & Bell, for appellant.

Joseph Hutchison, J. C. Campbell, W. H. Metson, and F. C. Drew, for appellees.

Before GILBERT and ROSS, Circuit Judges, and HUNT, District Judge.

ROSS, Circuit Judge. The appellees being in possession of a certain piece of mining ground near Nome, Alaska, and engaged in extracting gold therefrom, the appellant, claiming to be the owner of an undivided one-fourth of the ground by virtue of a location thereof under the name "Big Clid Fraction Claim," made on the 1st day of August, 1900, by one F. F. Bowers, and by virtue of a subsequent location made by Bowers of the same ground on the 12th day of January, 1901, under the name "Daisy Placer Mining Claim," commenced in the court below an action at law to recover the possession of the ground from the defendants, and on the same day commenced, in the same court, a suit to enjoin the defendants from working the ground or extracting therefrom any material, which actions, it appears from the record, were consolidated in the court below. An application was made by the appellant to the trial court for a preliminary injunction, which was heard upon numerous and voluminous affidavits filed on behalf of the respective parties, and resulted in an order denying the temporary writ applied for, from which order the present appeal comes.

The appellees, who were defendants in the court below, based their alleged rights to the ground mainly upon a location of the ground in controversy made by one Axel Olsen on the 11th day of June, 1899, under the name "Bear Cub Claim," and also under an attempted relocation of the same ground by one Elmer Reed on the 5th day of January, 1901. The affidavits filed on behalf of the respective parties are very conflicting, many of those filed on behalf of the defendants being to the effect that the boundaries of the Bear Cub Claim—the older location—were so marked on the ground that they could be readily traced, and that the locators thereof, and their successors in interest, performed the annual assessment work thereon required

Digitized by Google

by law. The sufficiency of the Bear Cub location, as well as the fact as to the doing of the annual assessment work thereon by the defendants and their predecessors in interest, are contested in the affidavits filed on behalf of the plaintiff in the court below. Those questions, as well as questions growing out of the locations under which the appellant claims, cannot be properly determined in advance of the trial of the case upon the merits. There has been no such trial in the court below, and we do not, therefore, think it best to discuss the respective contentions in advance of their consideration and determination by the trial court. For, as we said in the recent case of Vogel v. Warsing, 146 Fed. 949, 77 C. C. A. 199:

"Unless some convincing reason for it appears, we ought not to determine the merits of a case before they are decided in the court below."

It was in that case further said by this court:

"The granting or withholding of an injunction pendente lite ordinarily rests in the sound discretion of the court to which the application is made. It is not for this court to say whether it would have granted or withheld an injunction upon the showing which was made in the court below. We must recognize that upon that court was imposed the responsibility of the exercise of sound discretion upon the case as it was presented. Unless there has been a plain disregard of the facts or of the settled principles of equity applicable thereto, the exercise of the discretion of that court is not subject to reversal in this."

Applying those settled principles to the record in the present case, we must affirm the order appealed from.

Order affirmed.

(154 Fed. 481.)

MARKS v. GATES et al

(Circuit Court of Appeals, Ninth Circuit. May 27, 1907.)

No. 1,282.

1. SPECIFIC PERFORMANCE—DEFENSES TO RELIEF—ENFORCEMENT INEQUITABLE.
A contract may be perfectly legal, and yet a court of equity will not enforce specific performance if it is unreasonable or unconscientious or if its enforcement will work a hardship or injustice to one of the parties, but will leave the parties to their remedies at law.

[Ed. Note.—For cases in point, see Cent. Dig. vol. 44, Specific Performance, §§ 152-154.]

2. SAME—CONTRACTS ENFORCEABLE—GROSS INADEQUACY OF CONSIDERATION.
Defendant, for an expressed consideration of $1, agreed to convey to complainant a one-fifth interest in any and all property which he should acquire either by location, purchase, or otherwise in the territory of Alaska. In his bill, complainant alleged that the real consideration for the agreement was the cancellation of an indebtedness due him from defendant and cash advanced, amounting in all to about $12,000; also that defendant had acquired certain property in Alaska, by location, purchase, and otherwise, exceeding in value $750,000; and prayed for a decree for specific performance. *Held* that, there being no limit in the contract as to the time or manner of acquisition of the property or as to its character or value, the contract was inequitable and would not be specifically enforced, especially in view of the gross inadequacy of the consideration as disclosed by the bill.

[Ed. Note.—For cases in point, see Cent. Dig. vol. 44, Specific Performance, §§ 140-152.]

Digitized by Google

Appeal from the District Court of the United States for the Third Division of the District of Alaska.

On April 27, 1903, the appellant and the appellee William C. Gates, entered into an agreement at San Francisco, Cal., as follows:

"This agreement made and entered into this 27th day of April 1903, by and between William C. Gates, of Seattle, state of Washington, the party of the first part, and Isaac L. Marks, of the city and county of San Francisco, state of California, the party of the second part, witnesseth:

"That the said William C. Gates, for and in consideration of one dollar (1) to him in hand paid, the receipt whereof is hereby acknowledged, does hereby agree to and with the said party of the second part that he will convey to said party of the second part a twenty (20) per centum interest in any and all property which said Gates shall acquire, either by location, purchase or otherwise, in the Territory of Alaska.

"In witness whereof the said parties hereto have hereunto set their hands and seals the day and year first above written."

To enforce the specific performance of this contract, the appellant brought a suit alleging that the real consideration of the agreement was the cancellation of a prior indebtedness of $11,225 due to him from Gates, and the payment by the appellant to Gates of the further sum of $1,000 in cash; that in pursuance of said agreement Gates went to Alaska, and thereafter and prior to June 20, 1905, the date of the commencement of the suit, acquired there, by location, purchase, and otherwise, various properties, including certain specified mining claims in the Fairbanks mining district of Alaska, the value of which is more than $750,000. The appellee, Gates, demurred to the complaint on the ground that it did not state facts sufficient to constitute a cause of action. The demurrer was sustained on the ground that the contract set forth in the complaint is so unjust and inequitable as not to entitle the appellant to relief.

Miller, West & De Journel, J. C. Campbell, W. H. Metson, F. C. Drew, S. D. Wood, and C. H. Oatman, for appellant.

Before GILBERT, ROSS, and MORROW, Circuit Judges.

GILBERT, Circuit Judge, after stating the case as above, delivered the opinion of the court.

The enforcement of a contract by a decree for its specific performance rests in the sound discretion of the court—a judicial discretion to be exercised in accordance with established principles of equity. A contract may be valid in law and not subject to cancellation in equity, and yet the terms thereof, the attendant circumstances, and in some cases the subsequent events, may be such as to require the court to deny its specific performance. In Pomeroy, § 400, it is said:

"He who seeks equity must do equity. The doctrine, thus applied, means that the party asking the aid of the court must stand in conscientious relations towards his adversary; that the transaction from which his claim arises must be fair and just, and that the relief itself must not be harsh and oppressive upon the defendant."

Said the court, in King v. Hamilton, 4 Pet. 311–327 (7 L. Ed. 869):

"But this power is to be exercised under the sound judicial discretion of the court with an eye to the substantial justice of the case. When a party comes into a court of chancery seeking equity, he is bound to do justice, and not ask the court to become the instrument of iniquity. When a contract is hard and destitute of all equity, the court will leave parties to their remedy at law, and, if that has been lost by negligence, they must abide by it. It is a settled rule, in a bill for specific performance of a contract, to allow a defendant to show that it is unreasonable or unconscientious."

Digitized by Google

In Willard v. Tayloe, 8 Wall. 567 (19 L. Ed. 501), Mr. Justice Field said:

"In general it may be said that the specific relief will be granted when it is apparent, from a view of all the circumstances of the particular case, that it will subserve the ends of justice, and that it will be withheld when, from a like view, it appears that it will produce hardship or injustice to either of the parties. It is not sufficient, as shown by the cases cited, to call forth the equitable interposition of the court that the legal obligation under the contract to do the specific thing desired may be perfect. It must also appear that the specific enforcement will work no hardship or injustice, for, if that result would follow, the court will leave the parties to their remedies at law."

In Pope Manufacturing Co. v. Gormully, 144 U. S. 224–236, 12 Sup. Ct. 632, 637, 36 L. Ed. 414, Mr. Justice Brown said:

"To stay the arm of a court of equity from enforcing a contract, it is by no means necessary to prove that it is invalid; from time to time immemorial it has been the recognized duty of such courts to exercise a discretion, to refuse their aid in the enforcement of unconscionable, oppressive, or iniquitous contracts, and to turn the party claiming the benefit of such contract over to a court of law."

The contract in the present case had, at the time when it was made, no reference to any property then owned by the contracting parties, or even to property then in existence. It did not obligate the appellee, Gates, ever to go to Alaska or to acquire property there. It bound him during his lifetime to transfer to the appellant a one-fifth interest in all property of every description that he might acquire in Alaska by whatever means, whether by location, purchase, devise, gift, or inheritance—property of which neither party could know even approximately the value. It was a bargain made in the dark. The complaint is silent as to the means whereby the property therein described was obtained by Gates. It alleges that its value is more than $750,000. For aught that appears in the complaint to the contrary, the appellee, Gates, purchased this property and paid therefor its full value. The appellant, for the payment of $1,000 in cash and the cancellation of a debt of $11,225, which may or may not have been valid or collectible, now comes into a court of equity and asks the court to decree that the appellee, Gates, transfer to him property of the value of more than $150,000. If he now has the right to such relief, it follows that he may hereafter sustain suits to acquire a like interest in all property of every nature and description which Gates may at any time obtain in Alaska, and that such right will end only with the life of Gates. Courts of equity have often decreed specific performance where the consideration was inadequate, and it may be said in general that mere inadequacy of consideration is not of itself ground for withholding specific performance unless it is so gross as to render the contract unconscionable. But where the consideration is so grossly inadequate as it is in the present case, and the contract is made without any knowledge at the time of its making on the part of either of the parties thereto of the nature of the property to be affected thereby, or of its value, no equitable principle is violated if specific performance is denied, and the parties are left to their legal remedies, if any they have. In King v. Hamilton, supra, specific performance of a contract for the sale of a patented grant of land within the

Digitized by Google

Virginia Military District was denied in a case where the patent specified, and the parties understood, that the grant contained 1,533⅓ acres, and it subsequently appeared from a survey that it contained 876 acres in excess of that quantity. In Day v. Newman, 10 Ves. Jr. 300, Lord Alvanley refused to enforce the specific performance of an agreement for the sale for £20,000 of an estate worth only £10,000. There was no actual fraud in the case, but the inadequacy was so great that the court would not enforce it. In Earl of Chesterfield v. Jansen, 2 Ves. Sr. 125, Lord Hardwicke declared unconscionable a contract whereby an expectant heir, in consideration of £5,000, obligated himself to pay £10,000 out of his grandmother's estate if he survived her, but was to pay nothing if she survived him. In Mississippi & Missouri R. R. Co. v. Cromwell, 91 U. S. 643, 23 L. Ed. 367, Mr. Justice Bradley said:

"He comes into court with a very bad grace when he asks to use its extraordinary power to put him in possession of $30,000 worth of stock for which he paid only $50. The court is not bound to shut its eyes to the evident character of the transaction. It will never lend its aid to carry out an unconscionable bargain, but will leave the party to his remedy at law."

The facts presented in the complaint are not such as to entitle the court to retain the case for the assessment of such damages as the appellant may have sustained for breach of the contract. A court of equity will not grant pecuniary compensation in lieu of specific performance unless the case presented is one for equitable interposition such as would entitle the plaintiff to performance but for intervening facts, such as the destruction of the property, the conveyance of the same to an innocent third person, or the refusal of the vendor's wife to join in a conveyance. Cooley v. Lobdell, 153 N. Y. 596, 47 N. E. 783; Matthews v. Matthews, 133 N. Y. 679, 31 N. E. 519; Bourget v. Monroe, 58 Mich. 573, 25 N. W. 514; Eastman v. Reid, 101 Ala. 320, 13 South. 46; Milkman v. Ordway, 106 Mass. 232.

The decree of the court below is affirmed.

(154 Fed. 484.)

FIDELITY & CASUALTY CO. OF NEW YORK v. THOMPSON.

(Circuit Court of Appeals, Eighth Circuit. May 18, 1907.)

No. 2,435.

1. TRIAL—MOTION FOR DIRECTED VERDICT—DENIAL—WAIVER.

A motion for a directed verdict at the conclusion of plaintiff's case in chief is waived by defendant's introduction of evidence in its own behalf.

[Ed. Note.—For cases in point, see Cent. Dig. vol. 46, Trial, § 983.]

2. WRIT OF ERROR—REVIEW—NECESSITY OF EXCEPTION.

A motion for a directed verdict at the close of all the evidence is waived, where a direct ruling thereon is not insisted on and no exception is reserved.

[Ed. Note.—For cases in point, see Cent. Dig. vol. 2, Appeal and Error, § 1583.]

Digitized by Google

3. SAME—MOTION FOR NEW TRIAL—REVIEW—DISCRETION OF TRIAL COURT.
The denial of a motion for a new trial in a federal court is an exercise of discretion which is not reviewable by the Circuit Court of Appeals.

[Ed. Note.—For cases in point, see Cent. Dig. vol. 3, Appeal and Error, § 3864.]

4. INSURANCE—ACCIDENT POLICY—BLOOD POISONING.
An accident policy covered, inter alia, blood poison sustained by physicians or surgeons resulting from septic matter introduced into the system through "wounds" suffered in professional operations. Plaintiff, a dentist, was operating on a patient, who suddenly coughed, and particles of septic matter from his mouth were thrown against the mucous membrane of plaintiff's eye. The septic matter, without abrading, penetrating or bruising the membrane, infected it and caused blood poisoning. *Held*, that plaintiff had not received any wound, within the meaning of the policy, and was not entitled to recover under such provision.

[Ed. Note.—Accident insurance, risks and causes of loss, see note to National Accident Society v. Dolph, 38 C. C. A. 3.]

5. SAME—"WOUNDS"—DEFINITION.
It was error for the court under such circumstances to charge that the term "wound" as used in the policy included any lesion of the body resulting from external violence, whether accompanied by a rupture of the skin or mucous membrane or not.

In Error to the Circuit Court of the United States for the District of Colorado.

George L. Nye (W. Scott Bicksler and Edmon G. Bennett, on the brief), for plaintiff in error.

Charles A. Murray (Thomas B. Stuart, on the brief), for defendant in error.

Before SANBORN and VAN DEVANTER, Circuit Judges, and PHILIPS, District Judge.

VAN DEVANTER, Circuit Judge. This writ of error challenges a judgment obtained by the assured upon a policy of accident insurance. By three several assignments of error we are asked to say that there was no substantial evidence to sustain a finding for the plaintiff, and therefore that a verdict for the defendant should have been directed. One of these relates to the denial of a motion for a directed verdict made by the defendant at the conclusion of the plaintiff's case in chief, another to the disposition of a like motion made at the conclusion of all the evidence, and the other to the denial of a motion for a new trial.

Of these assignments it is sufficient to observe that the first motion and the exception to its denial were waived, because the defendant proceeded to introduce evidence in its own behalf (School District v. Chapman [C. C. A.] 152 Fed. 887);[1] that the second motion was also waived, because a direct ruling thereon was not insisted upon, and no exception was reserved in that connection (Newport News, etc., Co. v. Pace, 158 U. S. 36, 15 Sup. Ct. 743, 39 L. Ed. 887; National Bank of Boyertown v. Schufelt, 76 C. C. A. 187, 145 Fed. 509); and that error cannot be assigned upon the denial of the third motion, because in the federal courts a motion for a new trial is addressed to the sound discretion of the court (St. Louis Southwestern Ry. Co. v. Wainwright, 82 C. C. A. 16, 152 Fed. 624). In these circumstances the

[1] 82 C. C. A. 35.

Digitized by Google

defendant is not in position to question the submission of the issues to the jury.

By the policy the plaintiff was insured "against disability * * * resulting directly, and independently of all other causes, from bodily injuries sustained through external, violent and accidental means," and it was declared therein:

"This policy, subject otherwise to all its terms and conditions, covers blood poisoning sustained by physicians or surgeons resulting from septic matter introduced into the system through wounds suffered in professional operations."

There was evidence tending to show that the plaintiff, as stated in the policy, was an operating dentist; that during the life of the policy a patient, upon whom he was in the act of professionally operating for affected teeth, suddenly coughed, and thereby particles of septic matter were conveyed from the patient's mouth to the conjunctiva, or mucous membrane, of the plaintiff's left eye; that the septic matter infected this membrane and was thus introduced into his system, and that he was in consequence wholly disabled from practicing his profession for a period of 10 weeks, and partially disabled for a succeeding period of 26 weeks. There was also evidence that he felt the impact of the particles upon the surface of the eye, but no evidence that it produced any pain at the time, or abraded, penetrated, broke, or bruised the conjunctiva, or that the septic matter was introduced into his system otherwise than through the process of infection, in like manner as if the particles had entered the nose, mouth, or throat and had lodged upon and infected the mucous membrane thereof. The defendant requested the court to include the following in its charge to the jury:

"You are instructed that, by the terms of the plaintiff's policy of insurance, it is made to cover blood poisoning sustained by a physician or surgeon resulting from septic matter introduced into the system through wounds suffered in professional operations; but you are also instructed that there is no evidence of the plaintiff having received any wound, and he must recover, if at all, upon other provisions of the policy."

But the court denied the request, and included in the charge the following definition of the word "wound," taken from the Century Dictionary:

"In surgery, a solution of the continuity of any of the tissues of the body, involving also the skin and mucous membrane of the part, caused by some external agent, and not the result of disease. In medical jurisprudence, any lesion of the body resulting from external violence, whether accompanied or not by rupture of the skin or mucous membrane—thus differing from the meaning of the word when used in surgery."

Exception was taken to the refusal to instruct as requested, and to the definition given to the word "wound," and error is assigned upon both.

Without doubt, it is essential to a right of recovery under the provision relating to blood poisoning that the septic matter should have been introduced into the system through a wound; and this much, as we understand it, is conceded by counsel for the plaintiff. What, then, is a wound within the meaning of this provision? No purpose would

Digitized by Google

be served by stating the various meanings ascribed to the word by lexicographers, writers on medical jurisprudence, and judges, for they all recognize that one of its well-recognized meanings—that principally employed in surgery—includes an abrasion, breach, or rupture of the skin or mucous membrane, whereby animal venom or virus, or some impure, poisonous, or irritating matter, may gain entrance to the underlying tissues and contaminate the blood; and this, as we think, is the sense in which it is employed in this provision. It is there used only in respect of physicians and surgeons when performing professional operations, and then only in respect of a bodily injury through which septic matter may be introduced into the system and result in blood poisoning. Plainly, therefore, it refers to such a wound as removes the protection given to the tissues and blood by the skin and mucous membrane and so permits of the introduction of septic matter capable of poisoning the blood; in other words, it refers to an abrasion, breach, or rupture of the natural covering through which the septic matter may gain entrance. As so employed, it does not embrace such a wound as is described in the latter portion of the definition given in the charge, and does not include the blowing against the eye of that which does not mechanically abrade, break, or rupture the conjunctiva, but merely communicates to it an infectious disease by contact with its outer surface. So far as is disclosed by the evidence, the immediate mechanical effect of the particles blown into the plaintiff's eye was not different from what it would have been if they had consisted of so much pure rain water; they did not wound it, but infected it from the exterior, operating in like manner as do some other species of infecting matter when they come in contact with the unbroken skin or mucous membrane of other parts of the body. Indeed, it appears that the pathogenic germs in what was blown into the eye were chiefly pneumococci, which, if carried into the lungs, produce pneumonia; but it would not be said in such a case that the infection of the lungs was through a wound.

Our conclusion is that the instruction requested should have been given, and also that the latter part of the definition which was given to the word "wound" is rendered inappropriate by the other terms of the provision relating to blood poisoning.

The judgment is accordingly reversed, with a direction to grant a new trial.

(154 Fed. 487.)

SPRINGS & CO. v. CARPENTER et al.

(Circuit Court of Appeals, Fourth Circuit. May 31, 1907.)

No. 735.

GAMING—SPECULATIVE TRANSACTIONS—SALES FOR FUTURE DELIVERY—NOTES—VALIDITY.

It was no defense to a note given to plaintiffs for balance due them on certain transactions in the purchase and sale of cotton for future delivery in accordance with the rules of the New York Cotton Exchange that the transactions were mere gambling contracts and that the note was given to secure losses, in the absence of proof that plaintiffs had knowledge of defendant's intention during such transactions, if such intention ex-

Digitized by Google

isted, not to receive the cotton purchased by plaintiffs for them under the contracts nor to deliver that sold on the maturity of the contracts.

[Ed. Note.—For cases in point, see Cent. Dig. vol. 24, Gaming, §§ 39–44; vol. 7, Bills and Notes, § 975.]

In Error to the Circuit Court of the United States for the District of South Carolina, at Greenville.

C. P. Sanders (H. E. De Pass, on the brief), for plaintiff in error.
H. J. Haynsworth, for defendants in error.

Before GOFF, Circuit Judge, and WADDILL and BOYD, District Judges.

GOFF, Circuit Judge. The plaintiffs below, plaintiffs in error here, instituted this suit to recover the amount due on a note held by them, executed by the defendants below, now defendants in error. The defendants in their answer pleaded that the transactions, in settlement of which the note in suit was given, were all gambling transactions, and that said note was simply security for losses which had accrued on certain gambling contracts for the future delivery of cotton, without any intention on the part of defendants, or either of them, or of the other parties thereto, to take or deliver said cotton, the purpose being to speculate upon the rise and fall of the markets; and that the transactions mentioned were in violation of the laws of the state of South Carolina, whereby said note became void. Upon the trial before the jury the plaintiffs introduced evidence showing the nature of the contracts, and that under the rules of the New York Cotton Exchange, where the cotton was purchased and sold, such contracts required the actual delivery of the cotton, and also that such contracts were made in contemplation of such actual delivery. The plaintiffs testified that they had no knowledge of any intention on the part of defendants not to receive or deliver cotton when the contracts matured. The evidence offered by defendants did not show knowledge on the part of plaintiffs of the intention of defendants not to receive or deliver the cotton on the maturity of the contracts, other than that indicated by the character of the contracts themselves. At the close of the testimony the plaintiffs moved the court to direct a verdict in their favor, as the undisputed testimony demonstrated that the cotton was bought, and the contracts were made, under the regulations of said Cotton Exchange, and that they contemplated the actual delivery of the cotton, which was actually delivered when such contracts matured. The court below refused to so direct, but instructed the jury that it was the duty of the defendants to satisfy them that it was the intention of defendants, when they entered into the contracts, to gamble on the future price of cotton, and also that plaintiffs knew of such intention. The jury found for the defendants. The question we have to dispose of on this writ of error relates to the refusal of the court below to direct a verdict for the plaintiffs in error.

This court has heretofore construed the statute and announced the law applicable to this case. Parker & Co. v. Moore, 115 Fed. 799, 53 C. C. A. 369. We do not find it necessary in the case we now dispose of to either add to or detract from the conclusions we then reached.

Digitized by Google

We refer to that case as one controlling this. We find nothing in this record showing that the plaintiffs below knew of the intention of the defendants below—if in fact they had such intention—not to receive the cotton bought for them under their contracts upon their orders. This being so, on the testimony submitted to the jury, and from all proper inferences deducible therefrom, there was no conclusion that reasonable men should have reached, save only a verdict for the plaintiffs. It was therefore a matter of law for the decision of the court, and it erred in not directing a verdict.

The case will be remanded, with directions to set aside the verdict and grant a new trial.

Reversed.

(154 Fed. 1005.)

SCHALL & CO. v. UNITED STATES.

(Circuit Court of Appeals, Second Circuit. March 4, 1907.)

No. 194 (3,906).

1. CUSTOMS DUTIES—CLASSIFICATION—COMFITS—MARRONS.

The term "comfits" in paragraph 263, Tariff Act July 24, 1897, c. 11, § 1, Schedule G, 30 Stat. 171 [U. S. Comp. St. 1901, p. 1651], is practically synonymous with "confections," and includes boiled marrons (chestnuts) preserved in syrup.

2. SAME—MARRONS—NUTS—SIMILITUDE.

Marrons (chestnuts) preserved in syrup are not dutiable as "nuts" under paragraph 272, Tariff Act July 24, 1897, c. 11, § 1, Schedule G, 30 Stat. 172 [U. S. Comp. St. 1901, p. 1652]; nor do they resemble nuts sufficiently to be dutiable at the same rate by virtue of the similitude clause in section 7 of said act, 30 Stat. 205 [U. S. Comp. St. 1901, p. 1693].

Appeal from the Circuit Court of the United States for the Southern District of New York.

This is an appeal from a decision of the Circuit Court reversing a decision of the Board of United States General Appraisers (G. A. 5,908, T. D. 26,007), which reversed the assessment of duty by the collector of customs at the port of New York on certain merchandise, which the board held dutiable as nuts under paragraph 272, Tariff Act July 24, 1897, c. 11, § 1, Schedule G, 30 Stat. 172 [U. S. Comp. St. 1901, p. 1652], either directly or by virtue of the similitude clause in section 7 of said act, 30 Stat. 205 [U. S. Comp. St. 1901, p. 1693].

The opinion filed below, and here reprinted from 147 Fed. 760, was in full as follows:

PLATT, District Judge. The merchandise in suit is prepared, before it is imported, in the following manner: A large chestnut, grown in Southern France, Italy, and Spain, called a "marron," is stripped of its covering, and the inner meaty portion is boiled in plain water to make it soft and palatable; it is then immediately placed in a light syrup to preserve it, and a vanilla flavoring is added to increase its delicacy. Those broken in this operation are sent over in fragments, and those which retain their shape are sent whole. The whole marron brings a better price than the broken pieces.

To place such an article, either directly or by similitude, in the class of "nuts of all kinds, shelled or unshelled," which is the catch-all paragraph 272, Tariff Act July 24, 1897, c. 11, § 1, Schedule G, 30 Stat.

Digitized by Google

172 [U. S. Comp. St. 1901, p. 1652], after almonds, filberts, and peanuts have been specified in the three preceding paragraphs, at different rates for those shelled and for those not shelled, is intolerable. If it cannot be placed in paragraph 263, § 1, Scehedule G. 30 Stat. 171 [U. S. Comp. St. 1901, p. 1651], it certainly ought to be classified as a nonenumerated manufactured article, under section 6, 30 Stat. 205 [U. S. Comp. St. 1901, p. 1693], because it has advanced far beyond the merchandise referred to in paragraph 272; but with that matter we have no concern in this suit. Commercial designation does not affect the question. So far as the merchandise in suit is concerned, we are bound to use plain, ordinary, common sense in our interpretation of paragraph 263.

The important part is:

"263. Comfits, sweetmeats, and fruits preserved in sugar, * * * not specially provided for in this Act, one cent per pound and thirty-five per cent. ad valorem."

If the principle of similitude is to be applied now, as it has been by the Board of Appraisers in fitting the merchandise into paragraph 272, it would not be a far cry at all to take advantage of "fruits preserved in sugar," but we are not forced into that position. To my mind, the word "comfits" is broad enough to comprehend the merchandise in suit. It would be unfair to suspect that the Congress had a moment of tautological relapse when it placed the words "comfits" and "sweetmeats" in the same paragraph. The legislative mind must have found a distinction, and if we can find it, we may be helped out of our dilemma.

We turn to the dictionaries in common use in 1897, and we find that one of the definitions of a comfit is "a confection." The two words are practically synonymous. In the Century Dictionary we find that a confection may be either liquid or dry, and that one of its meanings is: "Something prepared or preserved with sugar or syrup"; and so it is no straining of language to hold that a chestnut, which is only palatable in the condition which it has reached after boiling, if placed in syrup to be preserved in that condition, is a comfit. The board admitted a doubt, but felt constrained to give the importer the benefit, under the well-recognized rule. I discover no shadow of doubt as to the propriety of using paragraph 263. The importer makes the point that the word "syrup" appears in the comfits paragraph of the Acts of 1883, 1890 and 1894, and is omitted in the like paragraph of 1897; but as the syrup used as a preservative is simply sugar and water, and the sugar furnishes the preservative part, there is no real distinction. "Syrup" was undoubtedly omitted from the last act as a superfluous word.

The decision of the Board is reversed, and the action of the collector sustained.

Hatch & Clute (J. Stuart Tompkins, of counsel), for importers.
D. Frank Lloyd, Asst. U. S. Atty.

Before WALLACE, LACOMBE, and COXE, Circuit Judges.

PER CURIAM. Decree affirmed in open court upon opinion of the court below.

Digitized by Google

(154 Fed. 377.)

FIELDING et al. v. CROUSE-HINDS ELECTRIC CO.

(Circuit Court of Appeals, Second Circuit. April 30, 1907.)

No. 260.

PATENTS—INVENTION—ELECTRICAL RECEPTACLE.

The Fielding patent No. 714,290, for an electrical receptacle which covers an improvement on the device of the patentee's earlier patent No. 660,-154, is void for lack of invention.

Appeal from the Circuit Court of the United States for the Southern District of New York.

This cause comes here upon appeal from a decree of the circuit court, Southern District of New York, dismissing the bill. The suit was brought for infringement of Letters Patent No. 714,290, issued Nov. 25, 1902, on application filed January 18, 1902, to Philip H. Fielding for an electrical receptacle. The patent describes the device as an improvement upon the device described in prior letters patent to the same Fielding No. 660,154 issued October 23, 1900. The opinion of the circuit court is reported in 148 Fed. 230; it sets forth the facts with sufficient fullness.

W. C. Stockbridge and Hubert Howson, for appellants.

A. E. Parsons and W. A. Redding, for appellee.

Before WALLACE, LACOMBE, and TOWNSEND, Circuit Judges.

PER CURIAM. It is evident from the opinion that the judge who heard the cause at circuit was induced to find patentable invention solely because of the testimony as to large sales. He says: "The testimony indicates that the improvements, though narrow, were quickly appreciated by the public and therefore any doubt which may exist * * * may fairly be resolved in favor of the patent." The evidence showed for the year ending October 1, 1902, sales of 151,-218 receptacles; for year ending October 1, 1903, 252,989; for year ending October 1, 1904, 252,191; for year ending October 1, 1905, 379,783. This was accomplished by methods of advertising, circularizing and placing the device on the market, at a cost of several thousand dollars. As a result the device has practically supplanted older types. The difficulty with this testimony however is, that the "device" the witnesses are talking about, is the "Fielding device," which contains all the features which are pointed out in both of the patents above referred to. The utmost that could be claimed for the testimony is that it shows an appreciation of the device as an entirety. It is valueless as evidence that the "improvement" set forth in the second patent which is the only one sued upon, required any more than the ordinary skill of the art, after the first patent had shown a device which did away with the necessity of cutting away the moulding, or of splicing the circuit wires or of leaving terminals and wires exposed, which were disadvantages inhering in the earlier type.

The district judge has very fully set forth the device of the first patent, the "improvement" of the second patent and the prior art; it is

Digitized by Google

unnecessary to repeat the descriptions. To protect contact points so that an arc cannot obtain access to the supporting surface was an important and well-known feature of correct installation of electric devices, and the method adopted by Fielding (when he found that the device of his first patent had that particular defect) to conform it to the canons of correct construction was surely too obvious to be considered an invention.

The decree is affirmed with costs.

(154 Fed. 474.)

THE PHONIX.

THE GLADIATOR.

(Circuit Court of Appeals, Second Circuit. March 26, 1907.)

Nos. 212, 213.

COLLISION—STEAM VESSELS MEETING—IMPROPER NAVIGATION.

Findings of the trial court which heard the testimony that a tug was solely in fault for a collision between a car float which she had in tow and a meeting steamship, on the ground that she failed in her duty to pass on the starboard side of the steamship as required by the position and courses of the two vessels, affirmed.

Appeal from the District Court of the United States for the Southern District of New York.

This cause comes here upon appeal from decrees of the District Court, Southern District of New York, which held the Gladiator solely in fault for a collision between a car float which she had in tow and the steamship Phonix.

W. S. Montgomery, Henry Galbraith Ward, and Robinson, Biddle & Ward, for appellant.

F. M. Brown and Butler, Notman & Mynderse, for appellee.

Before LACOMBE, TOWNSEND, and COXE, Circuit Judges.

PER CURIAM. The evidence in this case is very conflicting, and we do not find in it sufficient to disturb the findings of the district judge as to the position, signals, and navigation of the respective vessels. He saw and heard all the important witnesses, and was better able than we are to decide which were the more credible. Indeed, as the testimony stands in the printed record, we think the weight of evidence supports the narrative of the Phonix in its essential particulars. We find the testimony of the master of the tug Wadley especially persuasive, since he was following close behind the Gladiator, in a position where prudent navigation required him to watch her movements and those of the Phonix in order to regulate his own. His attention was attracted, therefore, to both boats at the critical time when they first began to navigate with reference to each other. We concur in the conclusion that:

"The situation and courses of the two vessels at that time were so far on the starboard of each other that they were not to be considered as meeting head and head, and it was the duty, therefore, of each to pass on the starboard side of the other."

Digitized by Google

The Phonix navigated in conformity to that obligation. The Gladiator did not.

The decree is affirmed, with interest and costs.

NOTE.—The following is the opinion of Holt, District Judge.

HOLT, District Judge. The evidence in this case is very conflicting. My conclusion is, however, that the proper time for the pilots of the Phönix and the Gladiator to decide what course to adopt to pass each other in safety was immediately after the ferryboat had passed before the Phönix. In my opinion, the situation and courses of the two vessels at that time were so far on the starboard of each other that they were not to be considered as meeting head and head, and it was the duty, therefore, of each to pass on the starboard side of the other. The testimony of the witnesses for the Phönix is that she gave two signals of two blasts each, to indicate that intention. The testimony of the witnesses for the Gladiator is that the vessels were in such a situation that the Gladiator had a right to pass port to port; that she sounded one whistle, and received no answer, and then another, and still received no answer, and that she meanwhile held her course and speed. Under these circumstances, I think that the Gladiator was in fault for attempting to pass port to port, and for not stopping and giving alarm whistles, if it is true that she received no reply to her one whistle signal. But her pilot admits that he heard a signal of two whistles, but asserts that he supposed that the signal was given to some ferryboats in the river. I think he had no right to make such an assumption; but if he did, the natural inference from such a signal would be that the Phönix would certainly not port her helm, but would probably either hold her course or starboard somewhat, to be sure to clear the ferryboats. The Phönix was bound for Pier 13, on the New York side of the East River. Her natural course, therefore, on an ebb tide after rounding the Battery, would be to go directly up towards Pier 13, on the New York side. I think the narrow channel rule has no application. It does not apply to vessels going from one part of a harbor to another. The Phönix could not be required, under the circumstances, to go over to the Brooklyn side of the river, and then return. Such a course would make it difficult for her to dock safely on an ebb tide. The Gladiator, if she had an adequate lookout, which, on the evidence, seems to me doubtful, ought not to have failed to perceive that the Phönix, after rounding the Battery, was turning in to the New York shore. There was plenty of room for the Gladiator to pass the Phönix on the latter's starboard side. Indeed, the collision occurred so near to the New York shore that it seems to me difficult to account for the action of the Gladiator in getting into the position in which she was at the time of the collision.

My conclusion is that the Gladiator was solely at fault for the collision. A decree may be entered accordingly.

Jany. 2, 1906.

Digitized by Google

(154 Fed. 356.)

MICHAELSEN v. SECURITY MUT. LIFE INS. CO.

(Circuit Court of Appeals, Third Circuit. May 13, 1907.)

No. 29, March Term, 1907.

INSURANCE—ANTICIPATING BREACH OF CONTRACT FOR LIFE INSURANCE—REMEDY.

Under the law of New York the wrongful refusal of a life insurance company to receive premiums on a policy which are due by its terms and to continue the policy in force is a breach of the contract which entitles the policy holder to maintain an action to recover damages therefor.

[Ed. Note.—For cases in point, see Cent. Dig. vol. 28, Insurance, §§ 513-515.]

In Error to the Circuit Court of the United States for the Eastern District of Pennsylvania.

For opinion below, see 150 Fed. 224.

Ruby R. Vale and Edward W. Magill, for plaintiff in error.

Joseph H. Taulane, Thomas Earle White, Fredric William Jenkins, and White, White & Taulane, for defendant in error.

Before DALLAS, GRAY, and BUFFINGTON, Circuit Judges.

BUFFINGTON, Circuit Judge. In this case, Michaelsen, herein styled plaintiff, held a policy of insurance on his own life, issued by the Security Mutual Life Insurance Company, herein styled defendant. It was agreed between the parties that plaintiff should surrender his policy and defendant should substitute for it another. Plaintiff accordingly surrendered his policy, receiving a receipt therefor which stipulated "that the surrendered policy shall remain in full force and effect until the issuance of the new policy, unless previously terminated by failure to pay premiums thereon when due." Some time later defendant tendered him a new policy which plaintiff alleged was not the kind agreed to be delivered. He refused to accept the same, demanded a return of his old policy, and tendered the annual premium thereon. The defendant refused to deliver that policy, and refused to receive the premium thereon. Thereupon plaintiff brought suit, alleging two causes of action, viz.: First, that defendant had unwarrantably refused to receive the annual premiums due on his original policy; and, secondly, that defendant failed to carry out its agreement to substitute a particular kind of policy in exchange for the original policy. There was a general verdict for plaintiff. Under the issues raised such verdict established the facts, first, that the defendant broke its contract to deliver the policy stipulated for, and, secondly, that it unwarrantably refused to accept the premiums on the original policy. The policy provided:

"The place of this contract is expressly agreed to be the Home Office of the Association in the City of Binghamton, New York, and this contract shall be governed by and construed only according to the laws of the State of New York."

Now it is clear that under the decisions of the New York courts the obligation of the insured to pay the yearly premiums on his policy im-

Digitized by Google

plies a corresponding obligation on the insurer to receive such premiums yearly, so long as the policy remains in force (Fisher v. Hope Mutual Life Insurance Comany, 69 N. Y. 163), and an unjust refusal to accept such premiums constitutes a breach of the contract (Speer v. Phœnix Life Insurance Company, 36 Hun [N. Y.] 324). In the latter case it is said:

"The defendant by refusing to receive the premium and continue the policy broke the contract at the date of such refusal, and subjected itself to the consequences that follow the breach of a binding agreement. The plaintiff has two remedies: One, to enforce the policy in equity by compelling the company to receive the premium and continue the insurance in force; the other, to recover at law such damages as he sustained by reason of the breach."

In People v. Security, etc., Co., 78 N. Y. 125, 34 Am. Rep. 522, it is said:

"The agreement is necessarily implied that the company will receive the premiums and keep the policy in life. * * * Therefore when it violates the law, * * * makes it impossible for the assured to pay premiums, and fails to carry the policies, it has broken its engagements with its policy holders and becomes liable to them on account of such breach. The policy holders then have a claim for damages, just as they would have if while doing business it had without just cause refused to receive the payment of premiums and to continue the policies in life."

In Kenyon v. National Life Ass'n, 39 App. Div. 293, 57 N. Y. Supp. 60, it was held that where the company wrongfully refused to receive a premium the insured "might elect to consider the policy at an end and bring an action to recover the just value of the policy." Under the decisions referred to, a right of action upon a wrongful refusal to accept accrued, and an action could have been maintained in the courts of New York. That action being brought in the court below, the plaintiff, under the facts determined by this jury, was entitled to have his damages assessed in accordance with our decision in Supreme Council v. Black, 123 Fed. 650, 59 C. C. A. 414. Notwithstanding such a verdict for the plaintiff, the court below felt constrained under certain New York decisions to enter judgment for the defendant on the ground that, this being a New York contract, a suit for damages would not lie in New York on an anticipatory breach of an insurance policy by a mutual insurance company. In view of the express holdings above noted that such an action will lie, we cannot accord to the cases cited the effect given by the court below. The case of Langan v. Supreme Council, 174 N. Y. 270, 66 N. E. 932, does not hold there can be no anticipatory breach whatever of an insurance policy which will warrant a suit in the New York courts for damages of a breached contract, but only that the facts of that case did not show a breach of contract which justified an action for damages. Far from denying that there could be no breach by way of anticipation; the contrary is virtually assumed. Thus the court say:

"It is assumed by the plaintiff that there has been such a breach of the defendant's contract of insurance as to entitle him to bring an action for the recovery of damages therefor. This assumption is incorrect. * * * The action of the defendant in the attempted amendment of the by-law which was in force when the plaintiff joined the association and received his certificate was wholly ineffectual to deprive him of any rights which had be-

Digitized by Google

come vested. It was beyond the power of the defendant to affect the obligation expressed in the certificate, without the consent of its holder. Weber v. Supreme Tent of K. of M., 172 N. Y. 490, 65 N. E. 258, 92 Am. St. Rep. 753. If, therefore, the amendment was void and inoperative, the contract of insurance remained unaltered and impaired. Its enactment constituted no breach of contract."

The case of Kelly v. Security Company, 186 N. Y. 16, 78 N. E. 584, turned on the question of the sufficiency of the pleadings. It was there said:

"What breach was alleged? The only allegation on that subject is that the defendant wrongfully declared the contract 'void and forfeited,' denied that the plaintiff had 'any rights thereunder,' and refused 'to continue said policy in force.' * * * There is no allegation of a refusal to receive premiums or give receipts therefor."

Manifestly that case is not controlling in a case like the present, where the company wrongfully retained the policy, wholly repudiates it, and absolutely refuses to receive any premiums thereon. We are therefore of opinion the judgment should be reversed and the court below directed to enter judgment for the plaintiff.

(154 Fed. 358.)

RUBBER TIRE WHEEL CO. v. MILWAUKEE RUBBER WORKS CO.

(Circuit Court of Appeals, Seventh Circuit. April 16, 1907.)

No. 1,336.

1. PATENTS—SCOPE OF MONOPOLY GRANTED—EFFECT OF STATE STATUTES.
   A state statute cannot interfere with the monopoly granted to a patentee and his assignees under the federal laws.

2. SAME—POLICY OF PATENT LAWS.
   The public policy declared by the patent laws is that it is for the benefit of the public to stimulate invention and that inventors shall publish their inventions, and to that end, and in consideration of such publication, to become effective at the end of 17 years, they insure to a patentee in the meantime absolute protection in the right to exclude every one else from making, using, or vending the thing patented without his consent.
   [Ed. Note.—For cases in point, see Cent. Dig. vol. 38, Patents, § 1.]

3. SAME—LICENSES—LEGALITY OF CONDITIONS.
   Use of a patented invention cannot be had except on the inventor's terms, and the requirement that a licensee join other licensees in a combination or pool to control the prices and output of an innocuous patented article is not in violation of the Sherman anti-trust act of July 2, 1890 (26 Stat. 209, c. 647, § 1 [U. S. Comp. St. 1901, p. 3200]). Patented articles, unless and until they are released by the owner of the patent from the dominion of his monopoly, are not articles of trade or commerce among the several states within the meaning of such act, because they are not articles in which the people are entitled to freedom of trade.

4. SAME—DECREE ADJUDGING INVALIDITY—SCOPE AND EFFECT.
   A suit for infringement of a patent is not a proceeding in rem, and a decree of a Circuit Court of Appeals in such a suit adjudging a patent void is binding only on the parties, and does not affect the validity of a license contract subsequently made between the owner of the patent and others, which is enforceable as fully and to the same extent in the circuit in which such decree was rendered as elsewhere in the United States.

Digitized by Google

5. SAME—LICENSE CONTRACTS—LEGALITY.

A system of contracts between the owner of a patent for rubber-tired wheels and its licensees, fixing uniform prices and the percentage of the whole output which should be made and sold by each licensee, and providing that the business of all should be supervised by commissioners appointed by the licensor, is not rendered invalid by a provision for the accumulation of a fund by such commissioners with power to use the same with the consent of a majority in the purchase of tires from any or all of the licensees and to sell the same to the trade at such prices as they should deem for the best interest of all; it being within the right of the owner of the patent, either itself or through its licensees, to push the sale of its tires, and, in doing so, to undersell the makers of other tires or infringers.

In Error to the Circuit Court of the United States for the Eastern District of Wisconsin.

For opinion below, see 142 Fed. 531.

A. L. Humes and Edwin E. Jackson, Jr., for plaintiff in error.

Charles Quarles, for defendant in error.

Before GROSSCUP, BAKER, and KOHLSAAT, Circuit Judges.

BAKER, Circuit Judge. Plaintiff in error began this action to recover royalties on account of defendant's use, under a license system set forth in the complaint, of patent No. 554,675, issued February 18, 1896, to Grant, plaintiff's assignor, for an improvement in rubber-tired wheels. The license system was embodied in three papers, Exhibits A, B, and C. That they "were all executed at one and the same time and were intended to constitute and did constitute one agreement" is not open to question, for such is the explicit admission in defendant's answer. The covenants of defendant must therefore be taken as having been made in consideration of plaintiff's grant. The license system, briefly, was this: Plaintiff authorized 18 companies, of which defendant was one, to make, use, and sell tires under the patent for 1 year; each company's share of the trade was fixed at a certain proportion of the whole, defendant's at 2 per cent.; two qualities of tires were to be made; the minimum selling price of the first quality was established at 65 cents a pound, of the second quality at 55 cents a pound; each company agreed to pay plaintiff monthly 4 per cent. of its sales, and, if in any month its sales proved to be larger than its proportional share of the total sales for that month, to pay plaintiff an additional royalty of 20 per cent. of the amount over its quota; plaintiff agreed to employ a commission of five persons to supervise the transactions of all the parties, and to turn over to the commission all royalties in excess of 2 per cent.; from the moneys so put into their hands the commission, after deducting their expenses and compensation for services in supervising and auditing, were to pay monthly to any company that had sold less than its quota of the preceding month's total business a sum equal to 20 per cent. of such deficiency; the commission then were to accumulate $50,000, and to distribute any sums in excess monthly among the companies according to their quotas of the trade, and at the expiration of the arrangement to distribute all funds then on hand; and it was agreed in paragraph 10 "that the commission shall have power upon the written consent of a

Digitized by Google

majority of the parties in interest hereto, to purchase tires from any or all of the parties hereto at the prices hereinbefore provided and to dispose of such tires to the trade at such prices as said commission shall deem to the interest of all the parties hereto, and in making such purchases the commission is hereby authorized to use any money in its possession." The complaint proceeded to charge that defendant under this arrangement had made and sold certain amounts of the patented tires on which it had failed and refused to pay the stipulated royalties.

The defenses were that the arrangement was in violation of the Sherman anti-trust act of July 2, 1890 (26 Stat. 209, c. 647, § 1 [U. S. Comp. St. 1901, p. 3200]), and of section 1791j of the Wisconsin Statutes of 1898, which prohibits Wisconsin corporations (defendant was one) from entering into any arrangement or contract intended to restrain competition in the supply or price of any commodity constituting a subject of commerce within the state. As reasons why defendant's promise to pay was unenforceable in the face of those statutes, the answer averred that the letters patent "were and were believed by all the parties to said agreement to be invalid and void, and had been so adjudged by the United States Circuit Court of Appeals for the Sixth Circuit, and that the Supreme Court of the United States had refused to review such decision; that said patent was resorted to in said contracts merely as a pretext to enable said contracting parties to evade the laws; and that said contracts were not and were not intended to be license contracts under letters patent, but were intended to establish and bring about the illegal trade combination herein mentioned; that the aforesaid purpose was carried out by the said agreement, and by reason thereof the price of the articles of commerce mentioned in plaintiff's complaint was raised beyond the former price thereof and beyond the natural and legitimate price thereof; and that the amount of said articles manufactured by the said parties was, by reason of said combination and monopoly, restricted."

A jury having been duly waived, the court heard the evidence, entered findings of fact and conclusions of law, and thereupon rendered judgment for defendant.

The court found that plaintiff was the owner of the patent; that the patent was valid; that prior to the execution of the contracts in suit the patent had been sustained by the Circuit Court for the Southern District of New York, 91 Fed. 978, by the Circuit Court for the Southern District of Ohio (unreported), by the Circuit Court for the Northern District of Georgia, 116 Fed. 629, and by the Court of Appeals for the Republic of France, and had been declared invalid by the Circuit Court of Appeals for the Sixth Circuit, 116 Fed. 363, 53 C. C. A. 583, and the Supreme Court had declined to take the case on certiorari, 23 Sup. Ct. 842, 187 U. S. 641, 47 L. Ed. 345; that after the last-named decision was rendered, and down to the execution of the contracts in suit, the manufacturers of tires disregarded the patent, paid no royalties, and cut the prices of the respective qualities to 50 and 40 cents a pound; that all of the parties to the contracts in suit entered into the arrangement in good faith, believing that the patent was valid and that the adverse decision was erroneous; that all of the manufacturers that had been infrin-

Digitized by Google

ging, except two small concerns, came into the pool; that the provision in paragraph 10 was never in any manner acted upon or executed; that defendant made and sold tires under the contracts, and failed to pay plaintiff certain specified sums which were due if the promise to pay was enforceable; that after the expiration of the arrangement prices went back to former rates.

As conclusions of law the court stated (1) that the patent was and is valid; (2) that the decision of the Court of Appeals for the Sixth Circuit is controlling only between the parties to that case and their privies; (3) that as a practical result, however, the effect of that decision is to denude the patent of the attributes of a monopoly in that circuit; (4) that the provisions of the contracts respecting the payment of royalties are separate from the provisions of paragraph 10, and are not thereby rendered illegal or void; (5) that the contracts authorized the creation of a fund for crushing competition in interstate commerce throughout the whole country, not only in Grant tires but in all other rubber tires; (6) that the contracts make an illegal combination under the laws of the United States, and are illegal and void.

The assignments of error go to the third, fifth, and sixth conclusions of law.

The Wisconsin statute is eliminated not only because it is not involved in any assignment of error, but also because a state cannot subtract from the right conferred upon a patentee and his assigns by the federal laws. Columbia Wire Co. v. Freeman Wire Co. (C. C.) 71 Fed. 302; U. S. Consolidated Seeded Raisin Co. v. Griffin & Skelly Co., 126 Fed. 364, 61 C. C. A. 334. For the protection of the physical or moral health of its citizens a state may restrain the use of "the corporeal thing or article brought into existence by the application of the patented discovery" (Patterson v. Kentucky, 97 U. S. 501, 24 L. Ed. 1115), but such a laying on of hands does not touch the monopoly of the federal grant. Nothing in this record questions the innocence of rubber tires.

Apart from any support that may be afforded by the third and fifth conclusions, is the sixth conclusion sound? Does the Sherman law shield the defendant from its promise to pay?

Under its constitutional right to legislate for the promotion of the useful arts, Congress passed the patent statutes. The public policy thereby declared is this: Inventive minds may fail to produce many useful things that they would produce if stimulated by the promise of a substantial reward; what is produced is the property of the inventor; he and his heirs and assigns may hold it as a secret till the end of time; the public would be largely benefited by obtaining conveyances of these new properties; so the people through their representatives say to the inventor: Deed us your property, possession to be yielded at the end of 17 years, and in the meantime we will protect you absolutely in the right to exclude every one from making, using, or vending the thing patented, without your permission. Bloomer v. McQuewan, 14 How. 539, 548, 14 L. Ed. 532; United States v. American Bell Telephone Co., 167 U. S. 224, 17 Sup. Ct. 809, 42 L. Ed. 144; Bement v. National Harrow Co., 186 U. S. 70, 22 Sup. Ct. 747, 46 L. Ed. 1058; Good v. Daland, 121 N. Y. 1, 24 N. E. 15; Fuller v. Berg-

Digitized by Google

er, 120 Fed. 274, 56 C. C. A. 588, 65 L. R. A. 381; Victor Talking Machine Co. v. The Fair, 123 Fed. 424, 61 C. C. A. 58; Rupp-Wittgenfeld Co. v. Elliott, 131 Fed. 730, 65 C. C. A. 544. Congress put no limitations, excepting time, upon the monopoly. Courts can create none without legislating. The monopoly is of the invention, the mental concept as distinguished from the materials that are brought together to give it a body. Use of the materials, as noted above, may be enjoined as injurious to the public; but that does not invade the monopoly. Use of the invention cannot be had except on the inventor's terms. Without paying or doing whatever he exacts, no one can be exempted from his right to exclude. Whatever the terms, courts will enforce them, provided only that the licensee is not thereby required to violate some law outside of the patent law, like the doing of murder or arson. Does the requirement that the licensee join other licensees in a combination or pool to control the prices and output of an innocuous patented article violate the Sherman law? We cannot dispose of the question on the authority of Bement v. National Harrow Co., 186 U. S. 70, 22 Sup. Ct. 747, 46 L. Ed. 1058 (see United States Consolidated Seeded Raisin Co. v. Griffin & Skelly Co., 126 Fed. 364, 61 C. C. A. 334), for according to our reading the question was expressly excepted from the decision; and so, aided by the declarations of general principles in that and other cases, we must formulate our own answer.

Under its constitutional right to regulate interstate commerce Congress made illegal "every contract, combination in the form of trust or otherwise, or conspiracy in restraint of trade or commerce among the several states," and subjected to liability to fine or imprisonment "every person who shall monopolize, or attempt to monopolize, or combine, or conspire with any other person or persons, to monopolize any part of the trade or commerce among the several states." Congress, having created the patent law, had the right to repeal or modify it, in whole or in part, directly or by necessary implication. The Sherman law contains no reference to the patent law. Each was passed under a separate and distinct constitutional grant of power; each was passed professedly to advantage the public; the necessary implication is not that one iota was taken away from the patent law; the necessary implication is that patented articles, unless or until they are released by the owner of the patent from the dominion of his monopoly, are not articles of trade or commerce among the several states. The evils to be remedied by the Sherman law are well understood. Articles in which the people are entitled to freedom of trade were being taken as the subjects of monopoly; instrumentalities of commerce between which the people are entitled to free competition were being combined. The means of effecting and the form of the combination are immaterial; the result is the criterion. The true test of violation of the Sherman law is whether the people are injured, whether they are deprived of something to which they have a right. Northern Securities Co. v. United States, 193 U. S. 197, 24 Sup. Ct. 436, 48 L. Ed. 679.

Grant produced a new integer in the useful arts. See Consolidated Rubber Tire Co. v. Firestone Tire & Rubber Co. (C. C. A., Second

Digitized by Google

Circuit, February 1, 1907) 151 Fed. 237.[1] Plaintiff, as his successor in interest, is the owner of a valid patent. That stands as an unquestionable fact on this writ of error. The only grant to the patentee was the right to exclude others, to have and to hold for himself and his assigns a monopoly, not a right limited or conditioned according to the sentiment of judges, but an absolute monopoly constitutionally conferred by the sovereign lawmakers. Over and above an absolute monopoly created by law, how can there be a further and an unlawful monopoly in the same thing? If plaintiff were the sole maker of Grant tires, how could plaintiff's control of prices and output injure the people, deprive them of something to which they have a right? Is a greater injury or deprivation inflicted, if plaintiff authorizes a combination or pool to do what plaintiff can do directly? To say yes means that substance is disregarded, that mere words confer upon the people some sort of a right or interest counter to the monopoly, when by the terms of the bargain the people agreed to claim none until Grant's deed to them shall have matured.

True that "it is as important to the public that competition should not be repressed by worthless patents as that the patentee of a really valuable invention should be protected in his monopoly." Pope Mfg. Co. v. Gormully, 144 U. S. 224, 234, 12 Sup. Ct. 632, 36 L. Ed. 414. But worthless patents and other supposititious cases are not on review.

What is stated as the third conclusion of law does not affect the result. The case in the Court of Appeals for the Sixth Circuit was not a proceeding in rem. The defendant in that particular suit has a decree on which, if he were again sued for infringement of the Grant patent, he could base a plea of res adjudicata. That plea would be as good in the other circuits as in the Sixth. No other member of the public could plead that decree in any circuit. The right conclusion of law from the facts found is that, so far as the parties to the contract in suit are concerned, the patent is valid throughout the United States, and is enforceable against every one who is not able to shield himself behind an erroneous decree. If any inference of fact (or prophecy) was to be drawn from the facts found, it should have been that the Court of Appeals for the Sixth Circuit will not exempt other members of the public from the monopoly of the Grant patent. That infringers may be more contumacious in one locality than in another does not change the rights of the parties before the court. If defendant, or any other of those who entered the pool, had been before the court below in an infringement suit, the validity of the patent and defendant's use thereof without license would have compelled a decree enjoining the sale of the patented articles in Michigan, Ohio, Kentucky and Tennessee and requiring an accounting of sales already made. Consequently there was full warrant for the parties to the contract in suit to agree to pay for the use of the patent throughout the United States.

None of the provisions of the contract, in our judgment, touched any matter outside of the monopoly under the patent. The control of prices and output, for reasons already stated, did not deprive the public of any right. Both before and after the period covered by the contract the market was demoralized, prices were cut, and the owner

[1] 80 C. C. A. 589.

Digitized by Google

of the patent was getting nothing except by the slow and expensive process of litigation; but the public was not entitled to profit by competition among infringers. The internal agreements relating to royalties, proportioning the business, supervision, and penalties, did not affect or concern the public at all. Equally innocuous, in our view, was the matter stated as the fifth conclusion of law. First, the public was not injured, because the finding of fact is that the provision was never acted upon in any way. Second, if a defense had been predicated on the presence of that provision in the contract, it would have been unavailing, because that provision is separable from the royalty and other valid parts of the contract. And, third, the owner of the patent had the right, either alone or through licensees, to accumulate funds with which to push the Grant tire on the market, and in so doing to undersell the makers of other tires and infringing makers of the Grant tires. It is not for a defendant's sake that courts listen to the defense that he ought not to pay because his promise was under an arrangement to injure the public. The public is not injured by an arrangement to compete with adversaries for the public's patronage.

The evidence has not been brought up. No assignment of error questions the fullness and accuracy of the finding of facts. No cross-assignment has been made. The amount due, with interest to the date of entering the judgment hereby directed, can be computed.

The judgment is therefore reversed with the direction to enter judgment in plaintiff's favor.

GROSSCUP, Circuit Judge (concurring). I concur in the foregoing judgment; but am not prepared to hold that patented articles are never, under any circumstances, articles of trade or commerce among the several states, within the meaning of the Sherman Act; and do not think that that premise is essential to the conclusion arrived at.

The patentee, in this case, in good faith believed the patent valid, as did also all the parties entering into the contracts. Whatever, therefore, their effect may have actually been, the contracts were not intended to affect prices, except as the parties believed they had the right, because of the patent, to fix and maintain prices.

Now were the patentee the manufacturer, he would unquestionably have had the right to fix and maintain his own prices; and were the other parties to the contract manufacturers for the patentee, at a given figure for such manufacture, the patentee's right to fix and maintain the selling price would still remain; nor could this be questioned were he to make the manufacturers his selling agents also. How, then, does the contract under review make a case in which the patentee, through his manufacturer, is not entitled to fix and maintain prices—how is the arrangement, in effect, different in any way of restraining trade or competition, from the arrangement just supposed, in which the patentee unquestionably has that right?

True, in the case under review, the manufacturers, as to the public, are not competitors; but neither would they be in the cases supposed; in both cases the public suffering nothing, except what the patentee had the right to exact; for so long, at least, as the patentee is not

Digitized by Google

exacting, as the value of his invention, an unreasonable sum (and his action in that respect is not here questioned) it is within his own right to say whether the price exacted should be retained by himself, or shall be distributed among the people manufacturing for him. The contracts, therefore, in the case before us, having been made in good faith, and not as a mere subterfuge, I can see in them nothing that the Sherman Act was intended to prevent.

(154 Fed. 365.)

INDIANA MFG. CO. v. J. I. CASE THRESHING MACH. CO.

(Circuit Court of Appeals, Seventh Circuit. April 16, 1907.)

No. 1,334.

1. PATENTS—INFRINGEMENT—SUIT BY OWNER AGAINST LICENSEE.

A suit by the owner of patents to enjoin a licensee from using any of the patented devices except on the terms imposed by the license contract is not one for the specific performance of the contract, but is one to enjoin infringement of the patents by excluding defendant from that part of the patent domain not granted by the contract, and is maintainable in a federal court of equity irrespective of the validity of the contract.

[Ed. Note.—For cases in point, see Cent. Dig. vol. 38, Patents, § 312½. Jurisdiction of federal courts in suits relating to patents, see note to Bailey v. Mosher, 11 C. C. A. 313.]

2. SAME—VALIDITY AND SCOPE—PNEUMATIC STRAW STACKERS.

The Buchanan patent No. 467,476, for a pneumatic straw stacker, covers the uniting of old elements to form a novel and useful combination of a generic character, and its claims are not limited in scope by anything in the prior art. Such patent is dominant in the art, and the patents to Nethery, Nos. 493,734 and 517,475, and to Landis, Nos. 512,553 and 514,266, are for improvements only and subordinate thereto, and the uniting of all in a single ownership is not therefore in restraint of competition.

3. MONOPOLIES—RESTRAINT OF TRADE—CONTRACTS RELATING TO PATENTED ARTICLES.

Complainant, which was the owner of a number of patents relating to pneumatic straw stackers, granted licenses to manufacturers of threshing machines by which they were given the right to use any or all inventions covered by such patents and required to sell stackers made thereunder at a stated price and to pay complainant a royalty on each stacker so made and sold. They were also given the right to use the inventions covered by any other patents relating to the art which should thereafter be acquired by complainant, and it did afterward acquire the ownership of practically all patents relating to such stackers. *Held*, that such contracts were not in restraint of competition and in violation of the Sherman anti-trust act of July 2, 1890 (26 Stat. 209, c. 647 [U. S. Comp. St. 1901, p. 3200]), but were within complainant's right under the patent laws, although all of the manufacturers of threshing machines in the United States became licensees, there being no right in the public to free competition in articles covered by patents.

[Ed. Note.—For cases in point, see Cent. Dig. vol. 35, Monopolies, §§ 11, 13.]

Appeal from the Circuit Court of the United States for the Eastern District of Wisconsin.

Charles C. Linthicum and W. H. H. Miller, for appellant.

Robert S. Taylor and I. K. Boyesen, for appellee.

Before GROSSCUP, BAKER, and KOHLSAAT, Circuit Judges.

Digitized by Google

BAKER, Circuit Judge. The appeal is from a final decree dismissing appellant's bill for want of equity. 148 Fed. 21.

A sufficient outline of the bill is this: Appellant owns certain patents on pneumatic straw stackers; in 1895 appellant licensed appellee for the lives of the patents to make, use, and sell stackers embodying any of the inventions then owned or thereafter acquired by appellant, and used by appellee, on the terms that appellee maintain the price at $250, put on the patent marks, and pay appellant $30 royalty, and that appellant give appellee the benefit of any more favorable terms extended to subsequent licensees; appellee accounted until 1902; in that year appellee sold stackers under the license, but refused to pay $40,000 royalties that accrued; beginning in 1902 appellee made a so-called "Norton stacker," omitted appellant's patent marks, refused to pay royalty on the ground that the Norton stacker did not embody any of the inventions covered by appellant's patents, and threatened to put that stacker on the market at a price less than $250; the Norton stacker did embody inventions covered by appellant's patents; beyond the damage that resulted from infringement, appellee's manufacture and sale of Norton stackers was injuring appellant in this wise: Before and after 1895 appellant had granted similar licenses to other makers; the validity of the patents had been universally recognized; on the patents appellant had built up a valuable property right in its system of licenses; appellee's conduct with respect to the infringing Norton stacker was demoralizing to the system, and, if persisted in, would destroy its integrity. In addition to an accounting, an injunction was prayed to restrain appellee from further making, using, or selling stackers in violation of appellant's rights as stated, or except in strict compliance with the terms of the license.

This is not a bill for the specific performance of a contract. The court is not asked to compel appellee to make and sell stackers under the license, and to see to it that appellee maintains the price, puts on the patent marks, and accurately reports its sales. So far as this bill is concerned, appellee may quit the stacker business any minute it sees fit. What is sought is an injunction against appellee's unlawful invasion of appellant's lawful patent monopoly. If appellee has not invaded, or if the monopoly is unlawful, appellant fails. If appellant had chosen to accept appellee's repudiation of the license, a bill to exclude appellee utterly from the domain of the patents would have lain. By declining to recognize the fact or the right of repudiation, appellant did not estop itself from asking to exclude appellee from that part of the domain which had not been granted, namely, the control of prices and methods. Stripped of all averments in relation to appellant's business built up on licenses, the bill states a good cause of action for infringement of the patents. These averments, as appellant rightly claims, show an aggravation of the injury resulting from the infringement, and constitute, therefore, an additional appeal for injunctive relief. That the bill properly invokes the aid of a court of equity, we have no doubt. Eureka Co. v. Bailey, 11 Wall. 488, 20 L. Ed. 209; Kinsman v. Parkhurst, 18 How. 289, 15 L. Ed. 385; Hardin v. Boyd, 113 U. S. 763, 5 Sup. Ct. 771, 28 L. Ed. 1141; West-

Digitized by Google

ern Union Tel. Co. v. Union Pac. Rld. Co. (C. C.) 3 Fed. 423, 721; McKay v. Smith (C. C.) 29 Fed. 295; Hat Sweat Mfg. Co. v. Porter (C. C.) 34 Fed. 745; Ball Glove Fastener Co. v. Ball & Socket Co. (C. C.) 36 Fed. 309; Am. Box. Mch. Co. v. Crosman (C. C.) 57 Fed. 1021; Id., 61 Fed. 888, 10 C. C. A. 146; Heaton-Peninsular Co. v. Eureka Specialty Co., 77 Fed. 294, 25 C. C. A. 267, 35 L. R. A. 728; Victor Talking Machine Co. v. The Fair, 123 Fed. 424, 61 C. C. A. 58; Rupp & Wittgenfeld Co. v. Elliott, 131 Fed. 730, 65 C. C. A. 544.

As a reason why it should not be compelled to pay delinquent royalties on stackers confessedly made in accordance with the patents, appellee pleaded that appellant had itself first violated the license contract by extending to subsequent licensees more favorable terms than it granted to appellee. This partial defense we find to be unsupported by the evidence.

We dismiss without notice other partial defenses which are not established by the evidence, or which, if sustained by any proof, were not pleaded. Rubber Co. v. Goodyear, 9 Wall. 788, 793, 19 L. Ed. 566.

Answering the charge in relation to the Norton stacker, appellee denied that that stacker embodied any invention of any of appellant's patents. The validity of the patents was not questioned in the answer; but appellee, through its expert, brought into the evidence a very large number of prior patents with a view to limiting the claims relied on to less than their prima facie import. If this may not properly be taken as an admission that the Norton stacker infringes unless the claims be thus stripped of some of their apparent meaning, it nevertheless accords with the fact; for, in our judgment, the differences between the Norton stacker and the claims relied on, taking them as they read, are not even colorable enough to require discussion. So the question at this point is whether the prior art depreciates the face value of the claims.

The claims to be considered in the Buchanan patent, No. 467,476, January 19, 1892, are these:

"(1) The combination, in a pneumatic straw elevator and stacker, of the fan, the base portion C, and an upper portion D, hinged thereto, the adjacent ends of said two portions being fitted one within the other, whereby a sliding union is provided as the relative positions are changed, thus permitting one portion to be elevated relatively to the other while still maintaining a substantially air-tight relation between said two parts, substantially as set forth."

"(5) The combination, in a straw elevator and stacker, of the two portions C and D, united by a hinge or pivot, and a rope E, secured to the lower portion at one end, passing around the sheave on the upper portion, and returning to a windlass, also secured to the lower portion, substantially as shown and described.

"(6) The combination, with a pneumatic straw elevator and stacker, of a mouth portion hinged thereto, having an inclined upper side and an open under side, and means whereby said mouth portion may be adjusted to a desired position, substantially as set forth.

"(7) The combination, with a pneumatic straw elevator and stacker, of a mouth portion D^2, hinged thereto and adjustable thereon from a position substantially in line with the main portion of the stacker to a position at an angle therewith, whereby the direction the straw takes at the point of discharge may be controlled, substantially as shown and described."

"(9) The combination, with a threshing machine, of a pneumatic straw ele-

Digitized by Google

vator and stacker attached thereto, as described, and a fan located within the machine and communicating with said straw elevator, said fan being arranged centrally of said machine and arranged to take its supply of air from the interior of the machine, thus drawing into itself the dust caused by the operation of said machine and discharging said dust into the straw, substantially as set forth."

Straw may be dumped into a heap and allowed to rot; or, if treated as a valuable product, it may be built into a compact, symmetrical stack, practically impervious to weather conditions, and thus preserved for future use. Prior to the advent of the Buchanan stacker, mechanical conveyors had carried the straw from the separator to the men who built the straw stack. So far as this record shows (and the whole world has apparently been ransacked to produce its bulky volumes), the patent of 1892 first disclosed a conception of means to free mankind from this most disagreeable and arduous manual task. Here was a new result, of the first order of importance. The utmost that any previous machine had done was to save the labor of getting the straw to the men who arranged it with their pitchforks and tramped it to solidity. This machine, with its fan for creating the blast that forces dust and straw out through an air-tight pipe; with its turntable joint at the base of the pipe, for lateral movement; with its substantially air-tight joint between the base and upper sections of the pipe, for vertical movement; with its adjustable mouthpiece at the outer end of the pipe, for controlling the direction and packing the blast-driven straw; with its appliances for giving universality of movement to the pipe and for directing the mouthpiece; all under the hand of a single operator—built straw stacks. The prior art is rich in fans, turntable joints, flexible pipe joints, air-tight pipes, mouthpieces and nozzles, sheaves, ropes, and windlasses, used in many connections and for many purposes; but Buchanan never claimed that he was the creator of any of these. The record exhibits many mechanical conveyors. They did well their work of saving the labor of the men who pitched the straw from the ground to the men on the stack; but the immense trade in them has been totally lost to the higher-priced machine that relieves both the men on the ground and the men on the stack. The Brinsmead British patent, No. 218 of 1868, shows the combination of a fan and a pipe that is capable of being raised and lowered. That this was merely a pneumatic conveyor is sufficiently indicated by the pictures of the machine in operation, wherein a prominent feature is men on the stack with pitchforks in operation. The history of that machine has been traced. It never achieved success for its limited purpose, and long ago was numbered with the dead. Buchanan's patent No. 297,561, April 29, 1884, may prove that eight years before he reached the goal he perceived the benefits that would come from stacking straw pneumatically; but it shows clearly that he then lacked the conception of means to accomplish the desired result.

The claims are for combinations of admittedly old elements. The combinations were novel and useful, and involved unquestioned invention. The result was not merely new in degree; it was new in kind. Buchanan did not improve upon some one else's generic combination; he brought forth something theretofore nonexistent as certainly as

Digitized by Google

if he had produced a new element in the useful arts. Having evolved the conception of means to effect the new result, he found a variety of forms of the necessary elements from which to select, some alone and some in partial combination. The prior art evidence, without basis in the answer, therefore assails the inventiveness of the claims rather than their scope. But the act of the inventor consisted of picturing in the creative imagination the new result, the new machine for achieving it, and the way to build the machine, rather than of the selection and rearrangement of the elements of dredges or of grain elevators or of straw conveyors, for "form, location and sequence of elements are all immaterial, unless form or location or sequence is essential to the result, or indispensable, by reason of the state of the art, to the novelty of the claim." Adam v. Folger, 120 Fed. 260, 56 C. C. A. 540, and cases cited. Against the pneumatic stacker of Buchanan's 1892 patent, the supplanted mechanical conveyors and the unsuccessful pneumatic conveyors are as nugatory as were the Hunt and Kelly barbed wires against the Glidden wire. The Barbed Wire Patent, 143 U. S. 275, 12 Sup. Ct. 450, 36 L. Ed. 161; Consolidated Safety Valve Co. v. Crosby Valve Co., 113 U. S. 157, 5 Sup. Ct. 513, 28 L. Ed. 939.

Little need be said of the other patents. They involve improvements upon one or another essential feature of the pneumatic stacker. Claims 1 and 2 of the first Nethery patent, No. 493,734, March 21, 1893, call for a fan positioned flatwise within or under the rear end of the separator, with its eye upward, and a hopper to guide the straw and dust into the eye of the fan. Claims 1 and 2 of the second Nethery patent, No. 517,475, April 3, 1894, provide a construction whereby the stacker may be more conveniently applied to a threshing machine already built, and means whereby the pipe, with its appliances for universal movement, may be mounted directly upon the turntable. Claim 1 of the first Landis patent, No. 512,553, January 9, 1894, exhibits a fan of the first Nethery patent, with a continuous web-plate to prevent the straw from coming into contact with the adjacent surfaces of the fan casing, thereby lessening friction and facilitating the discharge of the straw. Claim 2 of the second Landis patent, No. 514,266, February 6, 1894, discloses an improved mouthpiece whereby a greater range of distribution is afforded and the scattering of the straw by side winds is prevented. We find that the Buchanan patent of 1892 is dominant and the Nethery and Landis subordinate. But if the five be regarded as mere improvements upon the expired Brinsmead of 1868 and Buchanan of 1884, the fact that they are well adapted to conjoint use is established by appellee's way of making an up to date stacker.

The remaining matter in the answer is this: Appellee "submits" that its contract with appellant is a part of a license system which is violative of the Sherman Law, Act July 2, 1890, c. 647, 26 Stat. 209 [U. S. Comp. St. 1901, p. 3200]. If this is a mere interrogatory propounded to the court, and not a joinder of issues of law or of fact or of both, appellee is not entitled to a further hearing. We will treat the submission, however, as taking issue with respect to the existence of a binding contract, and thus afford appellee a standing in court

Digitized by Google

while the question of the extent of the relief that should be granted to appellant is being considered.

Appellee is using the patents. Its answer that it has no license to do so does not meet the prayer that it be enjoined from using the patents except in accordance with the license. If there be no license, an injunction, even in the form prayed for, will prevent appellee from using the patents for the future. The answer of no license, however, does reach the question of damages for the past. One way, royalties; the other, profits, etc. Appellant demands royalties. And throughout the valid relationship of licensor and licensee, appellant has the right not only to royalties, but also to appellee's silence respecting the validity and prima facie scope of the patents. Siemens-Halske Electric Co. v. Duncan Electric Mfg. Co., 142 Fed. 157, 73 C. C. A. 375.

Appellant (treating it as standing from the beginning in the shoes of the patentees) commenced to manufacture pneumatic stackers in 1891. The stacker had to be built into the separator. During 1891 36 stackers were built into 19 different makes of separators. In 1892 Gaar, Scott & Co., large manufacturers of threshing machinery, applied for license to build stackers into their own separators at their own factory. That license fixed the royalty at $30 and the selling price at $250, the same that appellant exacted from its own customers; provided that the licensee should be entitled to use all patents subsequently acquired by appellant, without additional royalty; and gave the licensee the benefit of any better terms that might subsequently be granted to others. By 1895 nearly all of the makers of threshing machinery had applied for and received, on the terms granted to Gaar, Scott & Co., licenses to build the stackers into their own separators at their own shops. Meantime appellant, at its own shops, continued to supply the demand for stackers to be built into old separators. Since 1895, the different makers being then willing to put stackers into old as well as into new separators, appellant has not been building stackers for the trade. As patents for improvements were issued from time to time appellant bought them up, in the main, until now it owns practically all of the patents that pertain to this art.

One attack upon appellant's license system is based upon the number of licensees. All the makers of threshing machinery have come into the system. That this resulted, without any concert of action on the part of the licensees, solely from a policy pursued by appellant through a course of years, is virtually admitted and is clearly proven. Appellant started out to supply the trade. That was its exclusive right. It committed no offense against the public in establishing the price at $250. The public could not force it to license another to make its device. If it had stopped with the first license to Gaar, Scott & Co., appellee apparently concedes that the Sherman law would not have been violated. But have not the people been given something beyond their power to demand, in a policy that permits a customer to get a stacker as a part of the separator of his choice, not merely in connection with a favored separator? The contracts and the businesses of these licensees are separate. But if, as a condition of enjoying the inventions, appellant had required the licensees to form a pool or combination for controlling the price and output of the patent-

Digitized by Google

ed article, the public would not have been injured, and consequently the Sherman law would not have been violated. Rubber Tire Wheel Co. v. Milwaukee Rubber Works Co. (herewith decided) 154 Fed. 358.

Another attack is predicated upon the number of patents. The proposition is that the public is entitled to competition between independent inventions. The linotype and the monotype inventions are referred to as illustrating machines that produce the same result by essentially different means and modes of operation. If Buchanan had invented the linotype, the patent laws would have given him a monopoly, not a lesser right conditioned upon his giving the public the benefit of his invention in a way some chancellor might deem equitable (Fuller v. Berger, 120 Fed. 274, 56 C. C. A. 588, 65 L. R. A. 381, denying the doctrine of Hoe v. Knap [C. C.] 27 Fed. 204), but an absolute monopoly, an unqualified right to deprive the people of its use for 17 years (and the writ of injunction of course affords the only possible way) or to make them pay his price in the meantime. Would he by conferring upon the public the advantage of that disclosure be barred of the right to make or buy the monotype invention? We do not understand counsel for appellee to say "yes" squarely. But their contention comes to this: If he owned either alone, over that he would have complete dominion; owning both, he controls nothing. The public has no right in either invention; therefore the public has the right to have them both in the market competing for buyers. Naught plus naught; the sum of two naughts is a substantive quantity.

If we are mistaken in our view of the prior art and in attributing primacy to the Buchanan patent of 1892; if the foundation patent be either the Brinsmead of 1868 or the Buchanan of 1884; and if the patents in suit be only for independent improvements upon a successful stacker that was free to the public—the argument of counsel respecting the lawfulness of the concentration of the patents in the hands of a single company is covered fully by the opinion of the Supreme Court in United States v. American Bell Telephone Co., 167 U. S. 224, 17 Sup. Ct. 809, 42 L. Ed. 144. With a quotation from that, the analogies being noted in parentheses, we close:

"Much is said in the briefs and in the arguments about the practical continuance of the telephone (stacker) monopoly. It is well to understand exactly what is meant thereby. No one questions that the Bell patent (the Brinsmead or the Buchanan of 1884) has expired, and that all of his invention is free to the use of the public. It is not denied that Berliner's invention (Buchanan's of 1892) is something independent and distinct from the Bell (Brinsmead) invention. It is the combination of these inventions (the Brinsmead, the Buchanan of 1884, and the Buchanan of 1892) with those of Blake and Edison (Nethery and Landis) which makes the instrument in commercial use, and because this is the most serviceable it is the one that the public insists upon having. But each invention has independent rights. It loses nothing because when united with another it results in an instrument more valuable than either alone will give. Suppose that at the expiration of this Berliner (Buchanan 1892) patent some new invention shall be made by which in connection with those already free to the public an instrument can be manufactured far surpassing in utility that used today, and the Bell Company (appellant) shall purchase that invention; the public, which always insists on having the best and most serviceable, will undoubtedly take the new instrument, and in that way it may happen that what is called the telephone (stacker) monopoly is practically still further continued. But surely that does not abridge the legal rights of any one.

Digitized by Google

The inventor of the latest addition is entitled to full protection, and if the telephone company (appellant) buys that invention it is entitled to all the rights which the inventor had. All that the patent law requires is that when a patent expires the invention covered by that patent shall be free to every one, and not that the public has the right to the use of any other invention, the patent for which has not expired, and which adds to the utility and advantage of the instrument made as the result of the combined inventions."

The decree is reversed with the direction to enter a decree in appellant's favor in accordance with the prayer of the bill.

GROSSCUP, Circuit Judge (concurring). The ground on which I wish to put my concurrence, so far as the case involves the Sherman Act, is this: The Buchanan patent is a true combination patent, of which the Nethery and Landis patents are improvements only, and subsidiary thereto—so much so that they could not have been put into practice except by infringement of the Buchanan patent. The patents as an entirety, therefore, constitute a single mechanical evolution—are blossoms from the same trunk—and in no sense are competitive patents; from which it follows that their concentration in one control is in no sense a combination to prevent competition. I state this as my view because I am not prepared to hold—as I have said already in a concurring opinion in Rubber Tire Wheel Company v. Milwaukee Rubber Works Company—that patented articles are never, under any circumstances, articles of trade or commerce, within the Sherman act.

(154 Fed. 372.)

LAMBERT HOISTING ENGINE CO. v. LIDGERWOOD MFG. CO.

(Circuit Court of Appeals, Third Circuit. May 7, 1907.)

No. 25.

1. PATENTS—INFRINGEMENT—EQUIVALENT PARTS.

Where three separate elements in a patented device, each performing an individual function, are supplanted in another device by a single element which itself performs the functions of all three, the threefold capacity of the single element is not the equivalent of the three separate elements.

[Ed. Note.—For cases in point, see Cent. Dig. vol. 38, Patents, § 24.]

2. SAME—CONVEYING APPARATUS.

The North patent, No. 480,029, for a conveying apparatus, relating to fall rope carriers for cable conveyors, is not infringed by the device of the Delaney & Lambert patent, No. 829,911. *Held* infringed, however, by another device manufactured by defendant.

3. SAME—INVENTION—CABLE HOIST.

The Dusedau patent, No. 548,973, for a cable hoist, is void for lack of invention.

Appeal from the Circuit Court of the United States for the District of New Jersey.

For opinion below, see 150 Fed. 364.

Edward M. Colie and Wm. H. Kenyon, for appellant.

Gifford & Bull and Livingston Gifford, for appellee.

Before DALLAS, GRAY, and BUFFINGTON, Circuit Judges.

Digitized by Google

BUFFINGTON, Circuit Judge. In the court below the Lidgerwood Manufacturing Company, assignee of a patent to Charles M. North, No. 480,029, for a conveying apparatus, and also of one to Wilhelm Dusedau, No. 550,973, for a cable hoist, filed a bill in equity against the Lambert Hoisting Engine Company, charging infringement of said patents. The court below entered a decree that the North patent was valid and infringed and the Dusedau was not infringed. Cross-appeals were taken. The patents pertain to conveyors which in a general way consist of a cable stretched between two towers. Traveling upon this cable on grooved wheels, and moved by an endless haul rope is a load carriage. Traveling also on the cable on grooved wheels and moved to and from the towers by an endless haul rope are rope carriers. A fall rope, extending from the engine at the head tower to the load carriage, raises or drops the load. So long as the conveyor is loaded the haul rope is taut, but, when it is empty and the haul rope is played out from the engine to drop it, the conveyor is not heavy enough to take up the slack of the line, the latter sags, and the conveyor remains stationary. This difficulty was overcome in Miller's patent, No. 434,550, by a successful device which the plaintiff company has standardized and still uses. It consists of a number of rope carriers suspended by grooved wheels on the cable of an inclined conveyor, between the head tower and the load conveyor. The haul rope passes through openings in each rope carrier and has a series of buttons on it of different sizes and at desired spaces apart, and the openings of successive rope carriers are of different sizes. These buttons and openings are relatively of such sizes that, when the load conveyor is lowered from the head tower by paying out the haul rope, the first button on such haul rope passes through the openings of all the rope carriers, except the last. This last it catches and carries from the head tower at the same speed the load conveyor is moving, and as thus carried out it of course supports the fall rope which the load conveyor draws after it. In like manner each button in time catches its mate rope carrier, and carries it forward in definite sequence and all at designed spaces apart. The result is that, when the load conveyor reaches the operative point, a sufficient number of regularly spaced rope carriers, automatically carried forward, support the fall rope, and prevent it from sagging when it is played out to allow the bucket or other load receptacle to drop. As the load conveyor returns to the head tower, the rope carriers are automatically carried back to their places in definite sequence by the same button mechanism. These advantages were disclosed by Miller in his patent, where he says:

> "As soon as the main carriage has reached the bottom of the incline, or to a stop secured to the main cable, the tackle-block will descend as the fall rope is run off of the drum and the descent of the tackle-block under these circumstances will not be interfered with materially by the weight of that portion of the fall rope intervening between the tower and the main carriage, because such weight will be borne by the fall rope-carriers."

It is manifest, therefore, that the practicable self-propulsion and self-distribution of rope carriers was known prior to North's patent. Instead of spacing rope carriers through mechanism placed on the moving ropes as Miller had done, North controlled them by placing all his

Digitized by Google

spacing mechanism on the conveyor itself. Without going in detail into the mechanism, it suffices to say he did this by placing on the rope carrier two connected grooved wheels of different diameter—one in engagement with the fixed cable, the other with the moving rope. Thereby a rope carrier, by virtue of the relative diameter of its two wheels, was made to travel outward from the head tower at quarter, half, or three-quarter the speed of the load conveyor. In returning, the rope carriers were simply pushed back to the head tower, as they were reached, by the load conveyor. This combination of two connected wheels of varying diameters in engagement, respectively, with the trackway cable and the hauling rope was embodied in the first claims, viz.:

"A rope carrier containing a wheel adapted to be turned by said hauling rope, a wheel adapted to bear against the cable or trackway, and connections between said two wheels, whereby the rotation of the first is communicated to the second."

The alleged infringing half-speed device of respondent shown in the accompanying cut is manufactured under letters patent No. 829,911, issued August 28, 1906, to Delaney and Lambert.

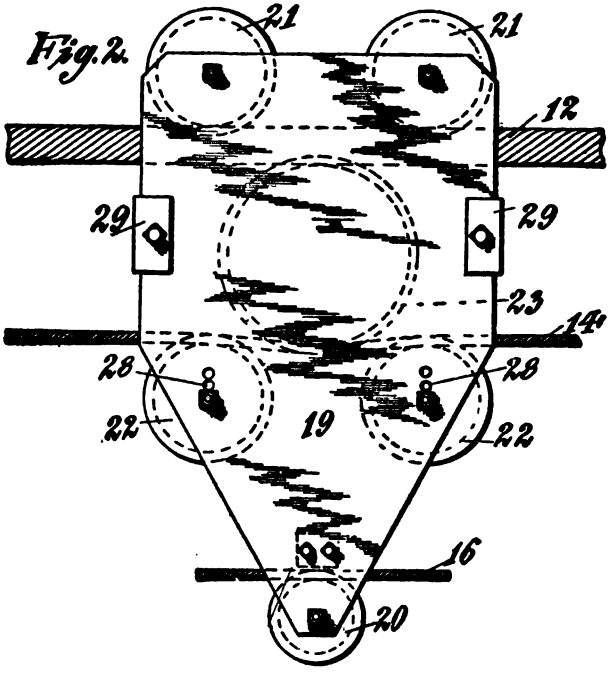

In it two grooved upper wheels, 21, support the rope carrier on the trackway cable, press the latter against the grooved main wheel, 23, and force it to grip the cable. The two grooved lower wheels, 22, press the haul rope against the grooved main wheel, 23, and force it to grip that rope. The wheel, 23, operates in a slight bend of the haul rope,

Digitized by Google

and, as the latter is moved, right or left, the rope carrier travels on the carrying wheels, 21, by the grip on the cable trackway of wheel, 23, at a rate one-half the speed of the haul rope, and therefore of the load conveyor. In this construction the main weight of the rope conveyor is suspended from, instead of supported on, the cable trackway, as is the case in North's devices. The strains are all on direct lines. It thus appears that Delaney's and Lambert's device spaces the rope conveyors by different means than did North. Each element in North's combination—a trackway cable, a load carriage, and a rope carrier—was old. The novel feature consisted in combining in his rope carrier "a wheel adapted to be turned by said traveling rope, a wheel adapted to bear against the cable or trackway, and connections between two said wheels, whereby the rotation of the first is communicated to the second." That is, his combination has one wheel bearing against the cable, another against the haul rope, and a rotation communicating connection between the two wheels. Now, in the respondent's conveyor, these three distinct elements have been eliminated, and the function of the three united in a single element. That element is the single central wheel, which, being "adapted to be turned by said traveling rope," performs the function of one of North's wheels, being "adapted to bear against the cable or trackway" performs the function of the second wheel, and, uniting in itself the function of both wheels, it embodies in itself the function of North's "connections between two said wheels, whereby the rotation of the first is communicated to the second." What essentially different mechanical structures the two are is shown by the fact that the connecting gearing between the two wheels in North's device is not simply a coupling or communicating device, but in it is embodied the speed and space regulating element which is the controlling feature of North's device. Thus in his specification Miller says:

> "The speed at which each carrier advances will be regulated by the diameter of the wheels or gears interposed between the sheave receiving motion from the fall rope on the endless rope and the sheave bearing against the cable, so that in the series of rope carriers on each side of the carriage each one of the series will travel faster than those farther away from the carriage. By this means each series of rope carriers will space itself along the cable at proper distances apart for all positions of the carriage."

Now, this gear-connecting mechanism between the two wheels which we find embodied in the sixth claim under the element "and mechanism actuated by said rope, whereby the movement of said traction device, and thereby that of the carrier, is controlled," has been eliminated by the respondent, who by placing a single wheel in another and novel relation, to wit, in a dual relation—i. e., to both the trackway cable and the haul rope—has made that wheel perform a triple function, and become itself the actuating and the speed-controlling agent of the rope conveyor. The respondent's single wheel device differing in form and function from the two-wheeled, gearing-connected device of North, we are clear it does not fall within the monopoly of North's patent. Where three separate elements, each performing an individual function, are supplanted by a single element which itself performs the functions of all three, it is quite clear that the three-

Digitized by Google

fold capacity of the single element is not the equivalent of the three single elements.

We think, however, that the respondent has infringed North's claims in their quarter and three-quarter speed rope conveyors. In the quarter speed device we find a grooved wheel of small diameter "adapted to bear against the cable or trackway." Beside it is a larger wheel, and the two are cast integrally with a hollow axle sleeve which forms a connection "between said two wheels whereby the rotation of the first is communicated to the second." Having thus the three elements of North's claim, performing the same work in the same way, it is clear the combination infringes; and the three-quarter speed device contains the same element in reverse relation. By placing the smaller wheel within the larger wheel and permitting the draw rope to enter through a slot in the groove of the larger wheel, an ingenious change has been made, but analysis shows it conflicts with North's claim, because its two wheels cast integrally with a hollow axle sleeve embodies North's three separate elements, viz., "a wheel adapted to be turned by said traveling rope," a wheel "adapted to bear against the cable or trackway," and connections between said two wheels, "whereby the rotation of the first is communicated to the second."

It remains to consider the patent of Dusedau. The gist of that invention consists in making the traction machinery of a rope carrier engage with the haul rope below, instead of above, the cable. The advantage of such a structure is obvious, for in it the weight of the machinery suspended below the cable tends to steady the structure and keep it plumb. But, while this is the case, its location at that point did not involve invention. The patent of North showed an endless rope, one branch of which was above, the other below, the cable. Now, while the particular method which Dusedau made to engage the traction rope below the cable might involve invention and warrant a claim for such construction, it is equally clear he was not entitled to claims covering any rope carrier mechanism placed below the cable without limiting such mechanism to his particular device. Such being the nature of his claims, the court was justified in holding his patent invalid.

In view of this conclusion, the motion to dismiss the appeal need not be decided. Upon both appeals the decree of the Circuit Court, except as now directed to be modified, is affirmed, and the cause is remanded to that court with instructions to enter a decree dismissing the bill as to the Dusedau patent, decreeing the respondent's quarter and three-quarter rope carriers infringe the first claim of the North patent, and that respondent's half-speed rope carrier does not infringe the North patent. Costs on the respondent's appeal on the North patent are to be paid by respondent, and on respondent's appeal on the Dusedau patent to be paid by complainant.

Digitized by Google

(154 Fed. 441.)

GOLDEN CROSS MIN. & MILL. CO. et al. v. FREE GOLD MIN. CO. et al.

(Circuit Court of Appeals, Ninth Circuit. May 6, 1907.)

No. 1,401.

1. PARTIES—SUITS IN EQUITY—AGENTS OF PARTIES.

Persons whose sole connection with the subject-matter of a suit is that they are agents for the person really interested are not necessary parties, where no relief is asked against them.

[Ed. Note.—For cases in point, see Cent. Dig. vol. 37, Parties, § 41.]

2. VENDOR AND PURCHASER—SUIT TO FORECLOSE LIEN—PARTIES.

Complainant sold certain mining property, reserving a vendor's lien. Some two years later an agreement was made between complainant, the purchaser, and a third party, whereby the latter, which held a claim against a stockholder of complainant, was to receive payment in installments from the net proceeds of the mining property, the operation of which was placed in the hands of a board of five managers. The third party, in accordance with the agreement, released its claim against the stockholder. *Held*, that to a suit by complainants against the purchaser and such third party to foreclose its vendor's lien the managers were not indispensable parties, being merely the agents of the parties before the court.[1]

Appeal from the Circuit Court of the United States for the Southern District of California.

The appellant, the Golden Cross Mining & Milling Company, a corporation of the state of California, together with J. M. Elliott, trustee, filed a bill in equity against the Free Gold Mining Company, a corporation of the state of Nevada, which will in this opinion be designated the "Free Gold Company," and the appellee, the Credits Commutation Company, a corporation of the state of Iowa, to foreclose a vendor's lien for $1,000,000, which had been expressly reserved in a conveyance made on June 26, 1897, by the appellant to the Free Gold Company of certain mining claims, mills, and other property situate in San Diego county, state of California. The Free Gold Company made no appearance, and as against it the bill was taken pro confesso. The appellee demurred to the bill for want of equity and for defect of parties defendant. On the latter ground the demurrer was sustained, and, the complainant declining to amend, the bill was dismissed. The bill alleged in substance that on June 26, 1897, the appellant was the owner of the property described in the bill, subject to a trust deed which it had given to James Spiers and others to secure sundry indebtedness of the appellant, aggregating more than $200,000, and on that day, for a consideration of $1,000,000, it sold and conveyed all of said property to the Free Gold Company; that no part of the purchase price was paid; that in the deed to the Free Gold Company the appellant expressly reserved to itself a lien upon the property so conveyed, to secure the payment of $1,000,000, the purchase price thereof; that at the same time an agreement was entered into between the appellant and the Free Gold Company providing for the manner in which said property was to be worked and managed by the latter, and for the application and disposition of the proceeds arising therefrom; that in this agreement reference was made to the conveyance above mentioned, and to the reservation of the lien, and it was recited that the Free Gold Company was advised that the trust deeds given to Spiers and others were invalid, that all or some of the claimed indebtedness was without right, and that litigation might be necessary to adjudicate the same; that the Free Gold Company covenanted to save the appellant harmless from said claims and indebtedness under said trust deed, and that it was agreed that nothing should be deducted from said sum of $1,000,000 by reason of said claims, and that as soon as the Free Gold Company should acquire possession of the property it would put into operation suitable machinery and appliances

[1] See note at end of case.

Digitized by Google

for treating tailings and concentrates, and operate said mines during the whole of the time it should be in possession, and that it would perform all necessary assessment work on the claims, procure patents therefor, put said property in suitable condition for sale, and endeavor to sell the same or enough thereof to pay the appellant said sum of $1,000,000, and that it would dispose of the alleged indebtedness of the appellant by payment, compromise, or litigation, and apply 60 per cent. of the net proceeds of the mine to the payment and extinguishment of such indebtedness, and pay the remaining 40 per cent. of such net proceeds to the appellant until all of its said original indebtedness should be paid, thereafter to pay 60 per cent. of the net proceeds to the appellant, the remaining 40 per cent. to be retained by the Free Gold Company.

The bill further presented the following facts: On June 28, 1897, the Free Gold Company commenced an action in the superior court of San Diego county against James Spiers and others to quiet its title to the said property, and to have the trust deeds to Spiers and others declared invalid. On the application of the Free Gold Company, C. W. Pauley was appointed receiver to work and operate the mines. Prior to April 22, 1899, differences and disputes had arisen between the Free Gold Company and the appellant and some of its stockholders, resulting in suits and actions at law, which were then pending, and on that date, while the above-mentioned suit to quiet title was still pending, and Pauley the receiver was in possession of the property, an agreement was made to compromise the pending litigation and all controversies between the Free Gold Company, the appellant, and certain of its stockholders. In that agreement it was provided that Spiers and other trustees should, as soon as possible, reconvey the property to the Free Gold Company; that neither such deed nor any patents from the United States to said mines should in any manner affect the lien reserved to the appellant in the deed of June 26, 1897. Referring to that deed and to the agreement of the same date, the agreement of April 22, 1899, provided as follows: "The said deed of conveyance and the said contract are hereby ratified and confirmed, except in so far as the said contract and deed are herein qualified, modified or changed, and this contract is and shall be considered as supplemental to the said original contract." It was further provided that a board of managers, consisting of five members, was to have the complete management and control of the mining property and of the mining operations thereon, with powers which are in substance as follows: First, to employ all servants and employés in the management of the property and the conduct of the business; second, to direct and control the development of the mines and property; third, to receive and dispose of the products of the mines in the manner which is set forth below. Prior to the execution of that agreement, the appellee was asserting a claim for a considerable sum of money against Hedges, one of the stockholders of the appellant. An arrangement had been entered into between Hedges, the appellant, and the appellee, whereby the latter was to accept in satisfaction of its claim $85,000, to be paid out of the net profits of the working of the mine, $30,000 of which was to be paid out of the share of the appellant, and $55,000 out of the share of the Free Gold Company, in consideration of which the appellee was to release its claim against Hedges. The terms of this arrangement were embodied in the agreement of April 22, 1899, on the expressed condition that the appellee should release its claim against Hedges. The appellee subsequently assented to the agreement and released Hedges. The agreement of April 22, 1899, provided that until the sum of $1,000,000 and interest was paid to the appellant, and $85,000 to the appellee, out of the net profits of the property there should be paid by the board of managers 25 per cent. of 68 per cent. to the appellee until $30,000 was paid, and thereafter $1,500 per month from the 25 per cent. of the Free Gold Company until the further sum of $55,000 should be paid to the appellee, and that in the event of the sale of said property 68 per cent. of any moneys coming to the appellant therefrom should be applied to the payment of said $30,000, and that all money coming to the Free Gold Company not payable to the appellant should be applied to the payment of any remaining balance of the $55,000 payable to the appellee. In the agreement it was further stipulated that the time when the appellant's lien should be enforced by a suit of foreclosure should be six years from June 1, 1899.

Digitized by Google

In a supplemental agreement it was provided that no change in the ownership or possession of the property, whether effected by private sale or judicial decree and public sale or otherwise, should affect the rights of the appellee as set forth in said contract, but that the property should pass burdened with the paramount lien and obligation of working said mines by the agencies provided in said contract, with the obligation to apply the proceeds as therein set forth until the appellee should be paid in full.

The bill further alleged that the lien of the appellee was subsequent and subject to that of the appellant, and that no part of the appellant's vendor's lien had been paid.

John S. Chapman, James A. Gibson, and William J. Hunsaker, for appellants.

Frank M. Porter and Shirley C. Ward, for appellees.

Before GILBERT and ROSS, Circuit Judges, and HUNT, District Judge.

GILBERT, Circuit Judge, after stating the case as above, delivered the opinion of the court.

The appellant sold its mining properties to the Free Gold Mining Company, reserving a vendor's lien for the purchase price. Some two years later, an agreement was entered into between the appellant, together with certain of its stockholders, and the Free Gold Mining Company, whereby the claim of the appellee against one of the stockholders of the appellant was made a charge upon the proceeds of the operation of said properties, and the operation was placed in the hands of a board of five men, called a board of managers, who were given authority to devote a portion of the net proceeds to the payment of the appellee's claim until it was discharged. The appellee, by subsequently assenting to this agreement became entitled to the benefits thereof. The appellant brought this suit to foreclose its vendor's lien, and the question presented on the appeal is whether the members of the board of managers are indispensable parties to the suit.

The rule as to who are indispensable parties is stated in Bates on Federal Equity Procedure, § 39, in which it is said:

"Although no inflexible rule for all cases has been formulated, yet the authorities have stated a general rule, which, notwithstanding its many exceptions and limitations, is of incalculable practical value in the preparation of bills and the administration of equitable remedies. Lord Hardwicke has stated the rule thus: That all persons ought to be made parties before the court who are necessary to make the determination complete and to quiet the question. Lord Redesdale, who is called the father of equity pleading, has stated the rule as follows: It is the constant aim of a court of equity to do complete justice by deciding upon and settling the rights of all persons interested in the subject of the suit, to make the performance of the order of the court perfectly safe to those who are compelled to obey it, and to prevent future litigation. For this purpose all persons materially interested in the subject ought generally to be parties to the suit, plaintiffs or defendants, however numerous they may be, so that the court may be able to do complete justice by deciding upon and settling the rights of all persons interested, and that the orders of the court may be safely executed by those who are compelled to obey them, and future litigation may be prevented."

We are unable to see that the managers are indispensable parties. They are not only not materially interested, but they have no interest whatever in the subject-matter of the suit. They have no title to or

Digitized by Google

lien upon the property which is the subject of the foreclosure. They are neither trustees nor beneficiaries under the contract. Their powers are not essentially different from those of a superintendent or manager placed in charge of mining property under the owner's instructions as to the disposition of the proceeds. They are not parties to the agreement under which they have operated the mines. They may be discharged at any time by the parties who placed them in control of the property, and they are free to quit the employment of those parties whenever they see fit to do so. They derive their authority wholly from the parties who are before the court. They have no rights to be protected by the decree. They can have nothing to say as to the sale of the property or the disposition of the proceeds. Persons whose sole connection with the subject-matter of the suit is that they are agents for the person really interested are not necessary parties where no relief is asked against them. Story, Eq. Pl. 231; Woolstein v. Welch (C. C.) 42 Fed. 566; Garr v. Bright, 1 Barb. Ch. (N. Y.) 157. See, also, Fidelity & Deposit Co. v. Fidelity Trust Co. (C. C.) 143 Fed. 156; Payne v. Hook, 7 Wall. 425, 19 L. Ed. 260; Jerome v. McCarter, 94 U. S. 736, 24 L. Ed. 136; and Smith v. Lee et al. (C. C.) 77 Fed. 779.

But it is contended that the only right which the appellee has in the property is the right to receive therefrom a certain proportion of the net proceeds of the operation thereof by the board of managers until its entire claim of $85,000 is paid, and that it is wholly useless to bring the appellee before the court unless the managers through whom its rights can be worked out and paid are also before the court to be bound by its decree. In answer to this it is only necessary to say that, if the court in its decree shall recognize the right of the appellee to have the operation of the mine continued by the managers until its claim is paid, it can only so decree in accordance with the terms of the contract. The court cannot add to the terms of the contract. The court will have no power by the decree to bind the managers, any more than they are now bound, to continue the operation of the mine. If their right and authority to continue such operation is recognized in the decree, it will be only because the parties to the suit have, by their contract, conferred such authority. The court can have no power to compel them to continue the work in which they are engaged. Nor, on the other hand, have they acquired any vested right to continue such work. They sustain no such relation to the property as to empower the court to impose duties upon them, or to decree any relief either for or against them. The most that the court can do in that regard is to recognize the existence of the contract, and to say that it shall be continued under the authority given by the parties thereto until the appellee is paid. To do this, it is not necessary to have the members of the board before the court. They have no standing to be heard as to the rights of the parties to the contract, and their presence is not necessary for the protection of the appellee's lien. If, on the other hand, on the final hearing, the court shall arrive at the conclusion that the rights of all the parties can be secured by a judicial sale of the property, released from the control of the board of managers, there are before the court all the parties necessary to enable

Digitized by Google

the court to decree such relief and provide for the disposition of the proceeds of the sale. The board of managers, if present in court, could not be heard to object to such a decree. We are of the opinion that the court below was in error in sustaining the demurrer and dismissing the bill.

The decree is reversed, and the cause is remanded for further proceedings not inconsistent with the foregoing opinion.

NOTE.

Necessary and Proper Parties in Suits to Foreclose or Enforce Vendors' Liens on Realty.

I. In General.

[a] (Ala. 1873) One who purchased land is not a necessary party to a bill to foreclose the vendor's lien thereon, where the vendor released said purchaser from liability, and accepted in lieu of his unpaid notes the individual note of a third person, who afterwards purchased the land.—Bozeman v. Ivey, 49 Ala. 75.

[b] (Ala. 1884) Where a vendor of land purchases it at sheriff's sale under a decree to enforce his vendor's lien against the widow of the vendee, both personally and as administratrix, and afterwards conveys it by a deed with covenants of warranty, the latter grantee is a proper party plaintiff, in an action by him to enforce his vendor's lien against the heirs of the first vendee.—Owen v. Bankhead, 76 Ala. 143.

[c] (Ala. 1904) A bill to enforce a vendor's lien on land set up that intestate deeded the land to his nephews and nieces, all of whom were at the time minors, with the exception of one adult nephew; that when the deed was given an agreement was made between intestate and the father of the grantees and the adult grantee to the effect that the land was worth $2,000, $1,400 of which was to be considered as an advancement to the grantees and the remainder to be paid intestate for which sum the father and adult grantee gave intestate their notes. *Held*, that the legal title to the land being in the grantees, they were proper parties to the bill.—Acree v. Stone, 142 Ala. 156, 37 South 934.

[d] (Ill. 1900) One who was the real owner of land standing in the name of another, and is the equitable owner of the purchase-money notes taken by such other person on selling the land, is a necessary party to a suit to enforce the vendor's lien expressly reserved in the deed. Judgment (1898) 79 Ill. App. 423, reversed.—Gordon v. Johnson, 186 Ill. 18, 57 N. E. 790.

[e] (Ind. 1874) Where the conditions of a bond for the conveyance of real estate were the sale of property to the obligor and a third person, and the release by the obligee of the third person from the liabilities for the obligee on account of the property, such third person was not a proper party plaintiff to an action to foreclose the vendor's lien.—Ferris v. Dickerson, 47 Ind. 382.

[f] (Mich. 1906) A tenant in common conveyed, without consideration and for convenience, his interest to his co-tenant, who contracted to sell it to a third person. *Held*, that the tenant was entitled to sue in equity to enforce his security for the purchase price against the third person, and that as his co-tenant held the legal title he was a necessary party.—Wood v. Schoolcraft, 145 Mich. 653, 108 N. W. 1075.

[g] (Miss. 1848) A. purchased land of B. and took a bond for title when the purchase money should be paid. A. assigned his interest in the title bond to C., without having paid B. the purchase money. *Held*, that A. had no lien on the land for the payment of the purchase money by C., and that a bill, brought against C. by A., to enforce a vendor's lien, to which B. was not made a party, must be dismissed.—Thompson v. Williams, 18 Miss. (10 Smedes & M.) 173.

[h] (Tenn. 1897) An allegation in an answer to a bill to enforce a vendor's lien that another than complainant had a half interest in the price is met by

Digitized by Google

proof that the purchase notes were made to complainant, and that he owned them and had recovered judgment thereon.—Whitman v. Ewin (Ch. App.) 39 S. W. 742.

[i] (Tex. 1886) The only necessary or proper parties to the foreclosure of a vendor's lien are the parties to the original contract, and those occupying the property, or claiming some interest therein subsequent to the original contract. —Faubion v. Rogers, 66 Tex. 472, 1 S. W. 166.

[j] (Tex. 1891) In a suit to foreclose a vendor's lien, persons who owned an interest in the land, but who did not join in the deed and were not named in the note given in payment, are not necessary parties.—Earle v. Marx, 80 Tex. 39, 15 S. W. 595.

[k] (Tex. 1899) Where a petition to recover on a purchase-money note and to foreclose the vendor's lien alleges that plaintiff is a bona fide purchaser before maturity, and this is not denied, defendant is not entitled to bring in as parties one for whose benefit the note was executed and the land purchased, and the vendor, who warranted the title to the land, against which taxes were due.—Phelps v. Scott, 49 S. W. 687.

[l] (Va. 1904) One who has been induced by a party to convey land to him which on the face of the contract belonged to others, and is threatened with suit in consequence of this act, may, in a suit to enforce his vendor's lien, convene all parties in interest, and have their respective rights determined and the deed reformed.—Ratliff v. Ratliff, 102 Va. 880, 47 S. E. 1007.

II. Vendor After Transfer of Lien or Note and His Assignees or Creditors.

[a] (Ala. 1848) The vendor of land took from the vendee three notes for the payment of the purchase money, and executed to him a bond for title. Two of the notes being paid, and the other transferred by the vendor to a third person, the vendor conveyed the land to the vendee, who had previously sold it, and assigned to his vendee the bond for title. *Held*, on a bill by the holder of the unpaid note to enforce the lien on the land for the unpaid purchase money, that the original vendor was not a necessary party.—Owen v. Moore, 14 Ala. 640.

[b] (Ala. 1871) A person indebted for the purchase money of land, such indebtedness constituting a vendor's lien thereon, at the request of the vendor gave his note for part of the amount due to a creditor of the vendor, receiving a corresponding credit on the purchase, all parties agreeing at the time that the note should carry with it a vendor's lien on the land to the amount for which it was given. *Held*, that the creditor of the vendor could enforce the vendor's lien by a bill in equity against the purchaser, and that the vendor was a proper party defendant.—Latham v. Staples, 46 Ala. 462.

[c] (Ala. 1889) Under Code 1886, § 1764, providing that "the transfer of a bond, bill, or note given for the purchase money of lands, whether the transfer be by delivery merely or in writing, expressed to be with or without recourse on the transferror, passes to the transferee the lien of the vendor on the lands," the transfer of a purchase-money note, by delivery merely, does not pass the legal title, and the payees are still necessary parties to a bill to enforce the lien.—Davis v. Smith, 88 Ala. 596, 7 South. 159.

[d] (Ala. 1890) In a suit to enforce a vendor's lien by an assignee of bonds given for the purchase money, the assignor is not a necessary party.—Kirk v. Sheets, 90 Ala. 504, 7 South. 736.

[e] (Ark. 1861) Where a vendor of land took a note for the purchase money, executed a covenant to convey the legal title on the payment thereof, and then assigned the note, he was *held* to be a necessary party to a bill by the assignee to enforce the vendor's lien.—Aikin v. Gill, 23 Ark. 477.

[f] (Fla. 1851) Where there is a contract to make title to land upon the payment of a certain sum of money, though the bond securing the payment of the money is assigned, yet the obligation remains to make the title when the condition is performed, and this obligation cannot be delegated without the consent of the vendee. The assignor should therefore be a party to a bill to enforce the lien upon the land, and his insolvency is not a sufficient excuse for the omission.—Betton v. Williams, 4 Fla. 11.

Digitized by Google

[g] (Ind. 1906) Where one acquired land knowing that her grantor's grantor had agreed to pay as part of the purchase price a debt made by his grantor, and that the debt had not been paid, the creditor could enforce the vendor's lien against the land in her own name.—Eisman v. Whalen, 79 N. E. 514.

[h] (Ky. 1817) An assignee of a note, who has procured judgment against the maker, which judgment has been paid by the assignor, must be a party to a bill by the assignor to subject land, for which the note was given, to payment of the judgment.—Adair v. Caldwell, 8 Ky. (1 A. K. Marsh.) 55.

[i] (Ky. 1852) Where a note, given for land sold and conveyed, has been assigned, the assignor is not a necessary party to a bill brought by the assignee to enforce the lien for the unpaid purchase money.—Leacock v. Hall, 52 Ky. (13 B. Mon.) 210.

[j] (Md. 1834) A vendor sued the administrator, the widow, and heir of his vendee for the balance of the purchase money due on the sale of land. The bill charged that the number of acres was not ascertained at the time, of sale, but it was agreed to estimate the quantity at 300 acres; that a survey should be made, and any excess should be paid for at the price agreed for such quantity. The vendor executed a bond for conveyance, and the vendee gave his bond for the purchase money. After a receipt of a part of the purchase money, the vendor assigned his bond to a third person. *Held* that, as the assignee of the vendor might have a lien for the unpaid balance of his bond, he was a necessary party to the suit.—Hall v. Maccubin, 6 Gill & J. 107.

[k] (Tenn. 1874) A vendor, who has assigned to a third party a note for unpaid purchase money, cannot join with the assignee in a bill in equity to enforce the vendor's lien. His individual liability on the indorsement must first be ascertained.—Adams v. Brown, 63 Tenn. (4 Baxt.) 124.

[l] (Tex. 1884) In a suit on a vendor's lien note by an assignee of the note, the payee, who has expressly transferred the lien, is a necessary and proper party.—Black v. Black, 62 Tex. 296.

[m] (Wash. 1892) Where one of two vendors of land assigned his interest in the purchase-money notes to the other, the assignor and his wife are not necessary parties to a suit to foreclose the vendor's lien.—Shelton v. Jones, 4 Wash. 692, 30 Pac. 1061.

[n] (W. Va. 1889) Where a deed conveying land reserves a lien for purchase money, but does not declare in whose favor it is reserved, if the note or bond for the purchase money is, at the time of the conveyance, executed by the purchaser payable to a third party, he has a right to the debt, and the right to enforce the lien; and the grantor is not a necessary party, nor, after his death, his personal representative or heirs. If the note or bond were orignally payable to the grantor in the deed, but afterwards, with his assent, the purchaser takes up that note or bond, and, in place of it, executes one to such third party, this does not extinguish the lien, but the third party may enforce it, without joining the grantor, or, after his death, his heirs or personal representative, as parties.—James v. Burbridge, 33 W. Va. 272, 10 S. E. 396

III. Vendee after Transfer or Sale of Land and Subsequent or Intervening Purchasers or Assignees.

[a] (U. S. 1887) Under Code Iowa 1873, § 1940, providing that an unrecorded lien for unpaid purchase money cannot be enforced by the vendor after a conveyance by the vendee, unless such conveyance is made after suit brought by the vendor, a purchaser after suit brought is not a necessary party to the suit.—Shropshire v. Lyle (C. C.) 31 Fed. 694.

[b] (Ala. 1837) To a bill by a vendor to enforce his lien on the land in the hands of a subsequent vendee, the intervening vendees, who have no interest, are not necessary parties.—Haley v. Bennett, 5 Port. 452.

[c] (Ala. 1843) In a bill by a vendor of land to enforce his lien for the purchase money, the vendee, who has parted with all his interest therein, is not an indispensable party; but he may be joined, and, if so, will be concluded by the decree.—Batre v. Auze's Heirs, 5 Ala. 173.

[d] (Ala. 1843) One put in possession of land by the vendee under a bond for title on payment of the purchase money, and claiming and refusing to

Digitized by Google

pay over the rents and profits, may be made a party to the vendor's bill to enforce his lien.—Chapman v. Chunn, 5 Ala. 397.

[e] (Ala. 1848) In a bill by a vendor of land, who has only given a bond for title, to enforce his lien for the purchase money, the purchaser at the sale of the vendee's interest on execution against him, though in possession, is not a necessary party, as no title passed by the execution sale, unless it appear that he is also the owner of the vendee's equity under the bond.—Driver v. Clarke, 13 Ala. 192.

[f] (Ala. 1873) One who purchased land is not a necessary party to a bill to foreclose the vendor's lien thereon, where the vendor released said purchaser from liability, and accepted in lieu of his unpaid notes the individual note of a third person, who afterwards purchased the land.—Bozeman v. Ivey, 49 Ala. 75.

[g] (Ala. 1876) A purchaser of lands by oral agreement only, who has made no payment of purchase money, has no equitable right in the land, and is not a necessary party to a bill filed by his vendor against a subsequent purchaser of the lands to subject them to the payment of the purchase money. —Hughes v. Hatchett, 55 Ala. 539.

[h] (Ala. 1881) An original vendee of lands, or his heirs or personal representatives, are not necessary parties to a bill to enforce a vendor's lien therefor, after he has conveyed his interest in the lands to another, with an assignment of the lien.—Wilkinson v. May, 69 Ala. 33.

[i] (Ala. 1890) To a bill to enforce a vendor's lien, a subpurchaser and a grantee of a portion of the premises in controversy is a necessary and proper party defendant.—Bogan v. Hamilton, 90 Ala. 454, 8 South. 186.

[j] (Ala. 1906) All subpurchasers of parts of a tract of land are proper parties to a bill to enforce the vendor's lien on the entire tract.—Reynolds v. Lawrence, 40 South. 576.

[k] (Ala. 1906) The bill in a suit to enforce a vendor's lien alleged that the land covered by the deed was owned and claimed by a bank, and D. and R. made parties to the bill. The amendment to the bill alleged that D., V., and R. became purchasers at a foreclosure sale, and that V. sold some interest in the land to the bank and to H., but made no deed to them, and that V. still held the legal title to some interest in the land. V. and H. were made parties. *Held*, that the owners of the land were made parties.—Reynolds v. Lawrence, 40 South. 576.

[l] (Ill. 1866) If A. sells land to B., who disposes of the same to other parties with notice of A.'s lien, B. is not a necessary party to a bill brought by A. to enforce his lien against B.'s vendees.—McLaurie v. Thomas, 39 Ill. 291.

[m] (Iowa, 1874) To a suit for the foreclosure of a title bond conditioned for the conveyance of the undivided half of certain lands, one holding a part thereof under a conveyance from the vendee is properly made a defendant.—Hammond v. Perry, 38 Iowa, 217.

[n] (Ky. 1833) In a contract for the sale of real estate, the vendor covenanted to convey on payment of the purchase price by the vendee. The latter assigned the contract, and, after several successive assignments, the vendor filed a bill against a remote assignee, to subject the land to a lien for the balance of the purchase price, in which suit such assignee prayed a rescission of the contract and repayment of the amount paid on the price, because the vendor could not give a good title. *Held*, that the original vendee was a necessary, and intermediate assignees were proper, parties.—Wickliffe v. Clay, 31 Ky. (1 Dana) 585.

[o] (Ky. 1848) A. sold land to B., and took his note for the price. A. assigned the note without recourse to C., and B. sold a part of the land to D., who paid for the same, and another part of the land to E. *Held*, in a suit by C. to enforce his lien upon the land, that D. was not a necessary party.—Ripperdon v. Cozine, 47 Ky. (8 B. Mon.) 465.

[p] (Md. 1840) To a bill by a vendor to enforce his lien on the land for the purchase money, the legal title remaining in him, the assignee of the title bond, or his representatives, are necessary parties to the suit.—Magruder v. Peter, 11 Gill & J. 217.

Digitized by Google

[q] (Mo. 1877) In a suit by an administrator to enforce a vendor's lien upon lands sold by his intestate, one who has purchased part of the same land at the administrator's sale is a proper party defendant.—Chapman v. Callahan, 66 Mo. 299.

[r] (Mo. 1903) In a suit to enforce a vendor's lien reserved in a deed, persons to whom the grantee conveyed the property before the suit are not necessary parties; but failure to join them leaves open their right to redeem.—Talbot v. Roe, 171 Mo. 421, 71 S. W. 682; Same v. Holland, Id.

[s] (Tex. 1874) Where it appears from recitals on the face of a note given for the purchase of land that the land has been conveyed by the purchaser to a third party before the execution of the note, no judgment ordering a sale of the land should be rendered in a proceeding to which the second purchaser is not a party.—Bridges v. Reynolds, 40 Tex. 204.

[t] (Tex. 1876) In a suit to enforce the vendor's lien, a subsequent vendee, in possession and claiming under a recorded deed, is a necessary party.—Carter v. Attoway, 46 Tex. 108.

[u] (Tex. 1877) A remote purchaser, in possession of land sought to be subjected to a vendor's lien, is a proper defendant, besides the first purchaser, but may defend by showing that he bought for value without notice of the lien.—Burks v. Watson, 48 Tex. 107; Huyler v. Dahoney, Id. 234.

[v] (Tex. 1884) In a suit on a vendor's lien note by an assignee of the note, the payee, who has transferred the lien, and the original maker are necessary and proper parties.—Black v. Black, 62 Tex. 296.

[w] (Tex. 1899) A deed expressly reserved a vendor's lien. The vendee sold a portion of the land, but the purchaser did not record his deed. Subsequently the first vendee sold the whole tract to one who took possession by an agent. Pending a suit to foreclose the original vendor's lien, the agent became the agent of the purchaser of the portion, but there was no visible change in the occupancy. *Held*, that the holder of the lien was not chargeable with notice of the rights of the purchaser of the portion, so as to render it necessary to make the latter a party.—Ferguson v. McCrary, 20 Tex. Civ. App. 529, 50 S. W. 472.

[x] (Tex. 1900) In an action by a grantor to foreclose a vendor's lien against his grantees, the vendee of the grantees is not a necessary party defendant.—O'Rourke v. Clopper, 22 Tex. Civ. App. 377, 54 S. W. 930.

IV. Heirs, Legatees or Legal Representatives.

[a] In a suit to enforce the vendor's lien for the purchase money of land, where the vendee is dead, his heirs are necessary parties.

—(Ark. 1869) Allen v. Smith, 25 Ark. 495;
(Mo. 1879) Ross v. Julian, 70 Mo. 209;
(Tex. 1873) Jackson v. Hill, 39 Tex. 493.

[b] (U. S. 1874) Where a purchaser of land dies without having paid the purchase price thereof, his executrix and heirs at law should be made parties defendant in an action to foreclose a vendor's lien.—Lewis v. Hawkins, 90 U. S. (23 Wall.) 119, 23 L. Ed. 113.

[c] (Ala. 1873) To a bill, of which the subpurchaser had notice, by a vendor of lands against the administrator of the purchaser, since deceased, and a subpurchaser from such administrator in his official capacity, to enforce a vendor's lien on such lands, the heirs of the deceased purchaser are not necessary parties defendant.—Thornton's Adm'r v. Neal, 49 Ala. 590.

[d] (Ala. 1886) A bill to foreclose a vendor's lien prayed that an administrator ad litem of the vendee be made a respondent, and alleged that administration was had on the vendee's estate, which was insolvent, and final settlement made, and all the assets distributed, leaving nothing for further administration. *Held*, that the administrator of the vendee was a necessary party, and that an administrator ad litem was not sufficient.—Moore v. Alexander, 81 Ala. 509, 8 South. 199.

[e] (Ala. 1890) Where, by the terms of a will, one obtains the legal title to land, for which testator had given a bond for title, and a note executed to testator for the unpaid purchase money, the executors, having made a final

Digitized by Google

settlement of the estate, and delivered the note to the legatee, were neither necessary nor proper parties to a bill brought by the legatee to enforce a vendor's lien on the land for the unpaid purchase money.—Bogan v. Hamilton, 90 Ala. 454, 8 South. 186.

[f] (Ark. 1877) In a suit to enforce the vendor's lien, reserved by a vendor, since deceased, who assigned a purchase-money note to a partnership as collateral security for a smaller claim, the vendor's administrator and the surviving partner of such firm may properly join as plaintiffs.—Reynolds v. West, 32 Ark. 244.

[g] (Ind. 1885) In a suit to enforce a vendor's lien, the vendee being dead, his administrator is properly made a party.—Lord v. Wilcox, 99 Ind. 491.

[h] (Ky. 1823) A bill in equity alleged that C., holding a bond for conveyance of land, sold the land to E., taking E.'s bond for the price, secured by lien on the land, which bond was assigned to the complainant; that E. died without having disposed of the land; and that defendant, as executor de son tort of E.'s estate, had fraudulently obtained a deed of said land in his own name. The bill asserted a lien on the land, and prayed for a sale. *Held*, that the heirs of E. were necessary parties to the suit.—Kenny v. Collins, 14 Ky. (4 Litt.) 289.

[i] (Ky. 1845) To a bill brought to enforce a vendor's lien, the heirs of one of several mortgagees of the vendee are necessary parties.—Thornton v. Knox's Ex'r, 45 Ky. (6 B. Mon.) 74.

[j] (Miss. 1870) In proceedings in equity to enforce a vendor's lien upon land for the purchase money thereof, not only the original purchaser, but, if the land has been resold by him and the purchaser is dead, the heirs and personal representatives of the deceased subpurchaser, should all be made parties, so that there may be a personal decree against the original purchaser, and for the further reason that the heirs of the subpurchaser have a right to require that the personal assets of the estate shall be applied to exonerate the land.—Mullins v. Sparks, 43 Miss. 129.

[k] (Miss. 1872) Where the purchaser of land is a nonresident of the state, and dies without having paid the purchase money, and has neither personal estate nor personal representation in the state where the land is situated, a bill in equity may be maintained against his heirs, without any personal representation, to enforce the vendor's lien upon the land.—Reed v. Gregory, 46 Miss. 740.

[l] (Miss. 1874) Where the administrator of a vendor of land is the complainant, asserting against the assignee of the vendee the security held by him for the debt, the heirs of the vendor are necessary parties, so that their title may be devested, unless the administrator tenders a proper deed from the heirs.—Kimbrough v. Curtis, 50 Miss. 117.

[m] (Mo. 1878) To a suit by the administrator of a vendor of real estate, who has died without making a conveyance, to enforce a vendor's lien, the heirs of the vendor should be made parties, and their presence cannot be dispensed with by tendering, either in the pleadings or at the trial, a deed from the heirs to the purchaser, unless the purchaser accepts the deed.—Leeper v. Lyon, 68 Mo. 216.

[n] (N. J. 1886) Heirs at law are not necessary parties to a bill by the administrator of a vendor of real estate to enjoin the sale of the property by the assignee in insolvency of the vendee, and to collect an unpaid balance of the purchase price, and have the same declared a lien upon the property, although a mortgage was to have been given for the unpaid balance, but was not given, and although the administrator had allowed the heirs to negotiate concerning the payment thereof; nor are the next of kin of the vendor's widow, after her death, necessary parties.—Hubbard's Adm'r v. Clark (Ch.) 7 Atl. 26.

[o] (Tenn. 1836) The personal representatives of the vendee are not necessary parties to a bill by the vendor to enforce his lien, unless the vendee has sold the land, and the purchase money, or a part of it, due him, remains unpaid. —High v. Batte, 18 Tenn. (10 Yerg.) 186.

[p] (Tenn. 1855) In a suit to enforce a vendor's lien by sale of the land, brought by the representatives of vendor against those of vendee, the heirs of

Digitized by Google

vendor must be made parties, as well as those of vendee.—McCoy v. Broderick, 35 Tenn. (3 Sneed) 203.

[q] (Tex. 1878) In a suit to enforce a vendor's lien against a decedent's estate. the heirs are not necessary parties.—Heath v. Garrett, 50 Tex. 264.

[r] (Tex. 1878) In an action to enforce a vendor's lien against a second vendee, the heirs of the first vendee (defendant's vendor) are necessary parties.—Pitman v. Henry, 50 Tex. 357.

[s] (Tex. 1894) Where a right to enforce a vendor's lien vests jointly in two legatees of the vendors, both are necessary parties plaintiff to a suit to enforce the lien.—Hanner v. Summerhill, 6 Tex. Civ. App. 764, 26 S. W. 906.

[t] (Va. 1875) In a suit by the personal representative of the vendor against the vendee to enforce the lien for unpaid purchase money, if the legal title has not been made, the heirs of the vendor ought to be made parties before a decree is rendered for the sale of the property.—Mott v. Carter's Adm'r, 26 Grat. 127.

[u] (W. Va. 1877) To a suit to enforce and foreclose a vendor's lien, brought by the personal representative of a deceased vendor of lands against the legal representatives of the vendee, also deceased, the latter's widow and heirs are necessary parties, as are also a joint vendor and beneficiary under the vendor's lien, and his assignee of part of the purchase money; and derivative purchasers or vendees from the vendee of a part of the land, subject to the vendor's lien, are also proper, if not necessary, parties.—Morris' Adm'r v. Peyton's Adm'r, 10 W. Va. 1.

[v] (W. Va. 1877) In a bill to enforce a vendor's lien, the purchaser set up that he was forced to buy in an outstanding title to an undivided three-sevenths of the land; that one B. had originally owned the land, and had sold to E., but had never made a deed, and after E.'s death had bought up four-sevenths of the equitable interest; but that three-sevenths was owned by W., which interest the purchaser had bought in. The character and extent of W.'s claim of title was not shown, and no deed to him, or by him to the purchaser, was shown. The deed from B. to the vendor was not in evidence, but litigation was pending between B.'s administrator and the vendor concerning the price. *Held*, that B.'s administrator was a necessary party to this proceeding; it being uncertain whether B. had retained a vendor's lien.—Harmison v. Loneberger, 11 W. Va. 175.

V. Holders of Other Notes Given for Part of Purchase Money.

[a] (Ala. 1886) A vendor sold land, giving a bond for title and taking notes, which he assigned to a third person. The vendee, being unable to pay, requested such third person to relinquish his lien on a part of the land when D. would pay the notes. By agreement between the parties the vendor conveyed the part of the land relinquished to the vendee, and the remainder to D.; the vendee delivering up his bond to such third person, who surrendered it to the vendor. D. then executed two notes to such third person in substitution of the vendee's notes. D. obtained by purchase two judgments against the vendee, who in exchange for them surrendered his note against D., and the judgment was so noted on the justice's docket. D. then subsequently delivered such note to plaintiff, who sought to enforce a lien under it on the land for which D. received a deed from the vendor. *Held* that, plaintiff being a junior incumbrancer to such third person, it was not necessary for him, in proceedings to enforce his lien against the interest which remained in D., to make such third person a party.—Flournoy v. Harper, 81 Ala. 494, 1 South. 545.

[b] (Ky. 1887) In an action by the holder of one of two notes given for the purchase money of land to collect the note, and enforce a vendor's lien upon the land, the holder of the other note, against which an outstanding equity in favor of the vendee should rightly be charged, is properly made a party.—Wallace v. Arnold, 4 S. W. 340.

[c] (Ky. 1898) Where two notes, given for the purchase price of land, are owned by different persons, a joint action to recover on both notes, and to enforce a vendor's lien therefor, may be maintained by the two owners.—Foster v. Lyons, 44 S. W. 625.

Digitized by Google

[d] (Tex. 1900) A sale under foreclosure of one of several notes secured by a vendor's lien and assigned to a third person passes good title, although the vendor was not made a party.—Douglass v. Blount, 22 Tex. Civ. App. 493, 55 S. W. 526.

[e] (W. Va. 1900) In a suit to enforce a lien for purchase money of land by a holder of one note given therefor, holders of other notes equally secured by such lien are necessary parties.—Miller v. Morrison, 47 W. Va. 664, 35 S. E. 905.

VI. TENANTS, INCUMBRANCERS, ADVERSE CLAIMANTS, OR THIRD PERSONS IN POSSESSION.

[a] (U. S. 1897) Lessees of real estate are not necessary parties to a suit for purchase money and foreclosure of vendor's lien, unless a decree is sought affecting their rights.—Brisco v. Minah Consol. Min. Co. (C. C.) 82 Fed. 952.

[b] (Ala. 1882) The rule that adverse claimants cannot be made parties to a suit to enforce a vendor's lien on land, for the purpose of litigating their title, applies only to claims of title derived from a stranger, or which were derived from the vendor or vendee prior to the purchase.—Randle v. Boyd, 73 Ala. 282.

[c] (Colo. 1884) In an action to enforce a vendor's lien, strangers to the title of both plaintiff and defendant, and claiming adversely thereto, need not be made parties.—Wells v. Francis, 7 Colo. 396, 4 Pac. 49.

[d] (Ky. 1903) Under Civ. Code, § 694, subsec. 3, providing that plaintiff, in an action to enforce a lien on real property, shall state in his petition the liens, if any, which are held thereon by others, and make the holders defendants, and no sale of the property shall be ordered by the court prejudicial to the rights of lienholders, a grantor having a lien for the unpaid balance of the purchase price of the land cannot, in a suit to recover the balance, obtain a judgment for the sale of the land to pay the balance without making lienholders defendants.—Leonard v. Welch, 76 S. W. 338, 25 Ky. Law Rep. 692.

[e] (Tex. 1860) To an action to enforce the vendor's lien, subsequent incumbrancers are not necessary parties, and their rights are not affected by the judgment.—Chapman v. Lacour, 25 Tex. 94.

[f] (Tex. 1882) In an action to foreclose a vendor's lien, expressly retained in the deed, by the holder of the notes for the purchase money, it is not necessary to make parties persons in possession of the land, having only equities therein, with notice, by the recitals of the deed under which they claim, that the purchase money has not been paid.—Robinson v. Black, 56 Tex. 215.

[g] (Tex. 1885) One in possession of land should be made a party to a suit to foreclose a vendor's lien, if his rights are to be concluded.—Foster v. Powers, 64 Tex. 247.

[h] (Tex. 1886) In an action to foreclose a vendor's lien, no title adverse to the contract being enforced can be litigated, and the holder of such adverse title is an unnecessary and improper party.—Faubion v. Rogers, 66 Tex. 472, 1 S. W. 166.

[i] (Tex. 1888) In 1877, W. sold 342½ acres of land to J., reserving in the deed a lien to secure part of the price. Forty-two and one-half acres were sold under execution against J., and conveyed to plaintiff in 1881, and the deed recorded. In 1883, the lien for the price was foreclosed, and by direction the 42½ acres were sold, and the lien satisfied in full. *Held*, that plaintiff, being in possession of the 42½ acres under a recorded deed, was a necessary party to the foreclosure, and, not having been made so, was not bound by it.—Ballard v. Carter, 71 Tex. 161, 9 S. W. 92.

[j] (Tex. 1898) A lienholder stating that his lien had been paid, and thereby inducing a senior lienholder to accept vendor's lien notes for a release of his lien, becomes a party to the vendor's lien in its inception by virtue of estoppel, and may be made a party to a suit to foreclose the lien. Judgment, Whitaker v. Big Sandy Lumber Co. (Civ. App. 1898) 46 S. W. 263, reversed.—Scharff v. Whitaker, 92 Tex. 216, 47 S. W. 519.

[k] (W. Va. 1897) In a suit to enforce a purchase-money lien reserved in a deed conveying legal title, with only covenant of general warranty, it is not

Digitized by Google

necessary to make prior lienors, holding liens against the property, parties, nor to refer the case to ascertain such liens, unless it appear that the vendor is insolvent.—McClaugherty v. Croft, 43 W. Va. 270, 27 S. E. 246.

VII. Husband or Wife of Grantor or Grantee.

[a] (Ala. 1877) Where a husband and wife sell land belonging to her statutory estate, taking notes for the purchase money, the husband is a necessary party to an action by her distributees, after her death, to enforce the vendor's lien and to obtain a decree for the amount of the notes.—Marshall v. Gayle, 58 Ala. 284.

[b] (Ala. 1882) A grantor's wife, who did not sign the deed, is not a proper party defendant to an action to enforce a vendor's lien on the land, brought by a transferee of the note given for the purchase price.—Sims v. National Commercial Bank, 73 Ala. 248.

[c] (Ala. 1894) The wife of a purchaser of land is not a proper party to a suit to enforce a vendor's lien for the price.—Mutual Building & Loan Ass'n v. Wyeth, 105 Ala. 639, 17 South. 45.

[d] (Ohio, 1880) The purchaser's wife is a necessary party to a suit to foreclose a vendor's lien on account of her right otherwise to claim a homestead. —Sutton v. Kautsman, 6 Ohio Dec. 910, 8 Am. Law Rec. 657; Dickinson v. Same, Id.

VIII. Trustees or Beneficiaries of Trust Deeds.

[a] (Miss. 1880) A trustee who has sold certain land is not a necessary party to a bill against the purchaser to whom he has conveyed, filed by the first vendor, to subject the land to a lien for an unpaid balance of purchase money secured by the deed of trust; nor is a purchaser of the land during the pendency of the above suit, as he will be bound by the decree.—Osborne v. Crump, 57 Miss. 622.

[b] (Mo. 1881) A. and B. sold their undivided two-thirds interest in land, retaining a vendor's lien. *Held* that, in an action to foreclose, one holding a deed of trust on the remaining undivided one-third was neither a necessary nor a proper party to the suit, and could not be affected by the judgment.—Dugge v. Stumpe, 73 Mo. 513.

[c] (Tex. 1896) To a suit to enforce a vendor's lien expressly reserved in a deed, the beneficiaries in a trust deed given by the vendee's grantee are not necessary parties; hence a sale on the judgment in such suit leaves them only a right of redemption.—Garrett v. Parker, 39 S. W. 147.

[d] (W. Va. 1893) In a suit to enforce a vendor's lien reserved in a conveyance of land, a trustee in a deed of trust, though subsequent to the conveyance reserving the lien, is an indispensable party, as he holds the legal title. —Turk v. Skiles, 38 W. Va. 404, 18 S. E. 561.

[e] (W. Va. 1897) Though, when suit was brought to enforce a vendor's lien, the land was under a prior lien by deed of trust, yet where, pending it, the trust has been released by release revesting legal title in the owner, decree may be made, without making such trustee and the creditor parties.—McClaugherty v. Croft, 43 W. Va. 270, 27 S. E. 246.

(154 Fed. 593.)

CORBIN et al. v. HOLMES.

HOLMES v. CORBIN et al.

(Circuit Court of Appeals, Eighth Circuit. May 13, 1907.)

Nos. 2,363, 2,417.

1. Joint Adventures—Sale of Land—Contract—Construction.

Defendant's testator, having purchased a quantity of wild land for $26,076.60, contracted with B., plaintiff's assignor, for the sale thereof as follows: That, in case B. totally failed to make sales during the first five years, the arrangement should terminate; that if there was a partial

Digitized by Google

failure to reimburse testator at the end of 10 years to the amount of his investment, with 10 per cent. annual interest, the arrangement should be terminated, and B. should receive 5 per cent. commission on sales made; and, if at the end of the 10 years testator should have been so reimbursed, B. should have one-half of the profits. At the end of the 10-year period there remained unsold 6,445 acres of land, and there was a net deficit of over $17,000 before testator's investment would be made good, of which more than $11,000 was in outstanding notes with accrued interest, and more than $6,000 was represented merely by unsold lands. *Held*, that such facts showed the happening of the conditions required by the second provision of the contract, and that the same terminated at the end of the 10 years, B. being entitled only to 5 per cent. commission on sales made up to that time.

2. SAME—LIEN.

B. did not acquire any interest in or lien on the lands under the contract, and was therefore not entitled to require a sale by process of court or otherwise, in order to repay testator's investment and to wind up the joint account.

3. PARTNERSHIP—CONTRACT.

Where plaintiff's testator, having purchased certain lands, placed them in the hands of B. for sale, agreeing that, if no sales were made within five years, the arrangement should be terminated; if sufficient sales were not made to enable testator to get his money back with interest, B. should receive 5 per cent. commissions on sales made; and if testator was reimbursed within that time B. should receive one-half of the profits—the arrangement did not constitute a contract of partnership between them.

4. JOINT ADVENTURES—CONTRACTS—ACCOUNTING.

Testator, having purchased certain land, agreed with B. that the latter should manage the sale thereof for 10 years, and in case sufficient sales were not made within that time to reimburse testator for his outlay, with 10 per cent. interest, B. was to receive 5 per cent. commissions on sales made, and, if the receipts were sufficient so to reimburse testator, B. should receive one-half of the profits. *Held*, that on termination of the contract period testator was entitled to be credited with interest at 10 per cent. on his investment, together with disbursements for taxes, foreclosure expenses, expenses for recording mortgages, etc., and should be charged with interest at 10 per cent. on all receipts.

Sanborn, Circuit Judge, dissenting.

Appeal from the Circuit Court of the United States for the District of Minnesota.

W. P. Warner, for Elon G. Holmes.

George C. Austin (Owen Morris, on the brief), for Corbin's executors.

Before SANBORN, HOOK, and ADAMS, Circuit Judges.

HOOK, Circuit Judge. Holmes, the successor in interest of one Bowman, obtained a decree against the executors of the will of Austin Corbin, deceased, for $21,718.49, being, according to the theory of the trial court, half of the profits realized in the purchase and sale of certain lands. Both parties appealed.

The controversy arose in the working out of a contract made in 1877 between Corbin and Bowman. Corbin, having purchased from one Dr. Upham about 13,500 acres of wild land in Minnesota for the sum of $26,076.60, made the following proposition to Bowman by a letter dated May 12, 1877:

Digitized by Google

"Now if you want to do this, you can. I will figure up exactly the cost as allowed the Doctor, put them in to you on joint account to run 10 years at 10% annual interest; I to have my money out first, and when it comes out you to have half the profits. I want this limited to 10 years, because I don't want it running indefinitely in case it don't work. If it don't operate at all at the end of five years, I shall expect you to release me from the trade, because it is not any object for you to be fiddling with a thing that don't pay, nor for me to be tied up and not do either of us any good. You will appreciate that, I guess. But the contract shall run for ten years. Then, if at the expiration of ten years it cannot be wound up, and I get my money out, I will agree that you will have 5% allowed on all sales that have been made, so that you will, in any event, not be doing this absolutely for nothing."

On May 21, 1877, Bowman, referring to the proposition of Corbin, wrote as follows to a representative of the latter:

"Dear Sir—I have your favor of the 16th informing me that Mr. Corbin had that morning left. I suppose of course, you mean that he has gone to Europe. He (Corbin) wrote that if I want to agree to a 10% joint account with him by and under the terms of which he is to pay all the taxes and pay for the land and I am to sell the lands and turn over all the proceeds to him until all his money invested with 10% interest is paid, etc., that at the end of 10 years if he shall not have received all his money and interest out of the sales, the joint account shall be wound up and I shall have 5% for all the lands I have sold, etc., etc., as will more fully appear by reference to the copy of the letter on your books, and he asked me for a reply, so I say that I will undertake to live the 10 years and sell during that time all of the lands I can according to the proposition he makes me."

It was by these two letters that the contract was formed. The cost of the lands to Corbin was found by the trial court to be as above noted, and, though the finding is assailed by the complainant Holmes in his cross-appeal, it is well sustained by the facts. Shortly after the contract was made 560 acres of the land were sold to the complainant's wife and eliminated from the account. The transaction worked a reduction of the principal of Corbin's investment to the sum of $24,993.93. The principal question in the case is presented by the contention of Corbin's executors that a wrong construction was put upon the contract. Upon the theory that time was not of the essence of the contract, the complainant was given a decree for half of the profits of the venture, although Corbin had not at the expiration of the 10 years been reimbursed his investment with interest. When the end of the 10-year period, May 21, 1887, came around, this was the condition: There remained unsold 6,445 acres of land. After crediting Corbin with the original cost of the lands and interest at 10 per cent. and with his disbursements for taxes and expenses for foreclosures, etc., with interest at 7 per cent., there still remained due to him $16,079.70, or about two-thirds of his original investment. At the same time there were on hand unpaid purchase-money notes amounting, with accrued interest, to $11,599.55. Upon the assumption that these notes should be charged to Corbin as cash, there nevertheless remained a balance at the end of the 10-year period of $4,480.25. In reaching this balance the trial court allowed Corbin but 7 per cent. interest upon his disbursements for taxes and expenses, whereas, as will be noted hereafter, we are of the opinion that he was entitled to 10 per cent.; and upon this basis the net deficit at the end of the 10-year period was $6,035.93, after charging Corbin with more than $11,000 of uncollected notes and mortgages

Digitized by Google

with accrued interest. This deficit was nearly one-fourth of his original investment. The trial court said:

"My direction of this accounting is based upon my holding that time was not of the essence of this contract, in such strictness that, if it was nearly but not strictly carried out within the 10 years, the complainant should forfeit absolutely all advantage substantially earned in carrying it out."

It seems quite probable that the substantial amount of the deficit and the substantial proportion it bore to the original investment, even after charging Corbin with the uncollected purchase-money notes, was not clearly perceived by the trial court when it adopted the theory upon which the decree proceeded.

Does the language of the contract permit of the construction that was given to it? In the consideration of this question it is well to bear in mind the settled rule that although time is not ordinarily of the essence of a contract for the sale of real property, yet it may appear to be so either by express stipulation to that effect or by clear implication from the terms employed; that courts have no right to make a contract for the parties, or to insert stipulations which it is clear they did not intend; that it is only when the question is at large, and is not foreclosed by the terms of the contract or the nature of the property which is the subject of it, that the courts will apply equitable considerations to the construction, so that justice may be done to the defaulting party without injury to the clear rights of the other. But the primary question always is, is it clear what the parties really intended by the language which they themselves employed? If it is, it is then the duty of a court to respect their intention. In the construction of the contract the trial court confined itself to the terms of Corbin's proposition. But the terms of Bowman's acceptance should not be regarded as mere subsequent declarations, useful as an aid to construction of a contract the import of which is doubtful. On the contrary, Bowman's acceptance was an integral part of the very contract that was entered into. Four times did Corbin, the owner of the lands, mention a 10-year period in his proposition. Each time he referred to the period within which he should get his money out. And Bowman said in accepting the proposition "that at the end of ten years if he (Corbin) shall not have received all his money and interest out of the sales the joint account shall be wound up and I shall have 5% for all the lands I have sold." Note that Bowman said "all his money," not part of it. Bowman further said that he would undertake to live the 10 years and sell all of the lands he could during that time. And note that this undertaking was limited to 10 years, and did not extend an indefinite time thereafter.

One of the strongest arguments in favor of the construction asked by Corbin is the existence of the provision for the payment of the 5 per cent. commission on the sales if he had not succeeded in getting all of his money back in 10 years. In other words, Corbin recognized the equities of the situation, and that it would be a hardship upon Bowman to deprive him of all compensation for his labors if he succeeded in making sales, but not enough to pay out. This alternative, proposed and accepted in itself, provided a compensation not unusual in such transactions; and it robs the case of those harsh features which cause

Digitized by Google

a court of equity to pause and seriously consider whether the parties so intended when their minds met in mutual agreement. Corbin and Bowman chancered their own case. They provided for (1) total failure to make sales during the first five years, (2) partial failure to fully reimburse Corbin at the end of 10 years, and (3) complete success in reimbursing him. If the arrangement had not operated at all at the end of five years, it was to be at an end. If it did operate and at the end of 10 years there was a partial failure in getting all Corbin's money out, there was to be a 5 per cent. commission. If there was complete success at the end of 10 years, then Bowman was to have a half interest in the remaining property and receipts. The line between partial failure with a commission and complete success with a proprietary interest in profits is indicated by the words of Bowman's acceptance—"If he shall not have received all his money and interest out of the sales"; and also by the words of Corbin in his proposition: "Then if at the expiration of ten years it cannot be wound up and I get my money out," etc. A deficit of $18,000 out of an original investment of $25,000 so obviously brings the case within the 5 per cent. commission clause as to preclude argument. Of this deficit more than $11,000 was in outstanding notes with accrued interest, and more than $6,000 had nothing behind it excepting Corbin's unsold lands. Upon what theory the outstanding notes were charged to Corbin does not appear. That they should not be so charged was recognized by the complainant when, in drafting his bill, he was careful to aver that Corbin had his money out, exclusive of outstanding purchase-money notes and mortgages.

But, however the uncollected purchase-money notes and mortgages should be regarded, there still remained over $6,000, about one-fourth of the original investment, unmet by any sales of lands. Although this amount is a substantial one, we are asked to remake the contract upon considerations of degrees of performance, and to give Bowman one-half the value or proceeds of unsold lands after Corbin shall have been paid therefrom the remainder of his investment. If this may be done, it would be interesting to know at what degree of failure to fully perform the 5 per cent. commission clause would apply, and at what lesser degree of failure the complainant would be entitled to a proprietary interest in the surplus. Suppose the deficit, after charging Corbin with uncollected notes, had been $7,000 or $8,000 or $10,000, what would we say? Of course, both the spirit and the letter of the contract preclude a reimbursement of Corbin's investment by his own lands in specie. The contract could not be wound up by setting off to Corbin a part of the lands that were really his and by dividing the remainder. To do so would be repugnant to the contract in any phase in which it may be considered. Corbin wanted his lands sold, not left on his hands. He wished his investment fully returned to him in cash within the 10 years. The contention of complainant, if sustained, would practically deprive the commission clause of the contract of its intended office. For all substantial purposes it would stand expunged, and the logical conclusion would be that, by selling a few tracts of land during the first five years to escape annulment of the contract, Bowman could have remained idle during the remainder of

Digitized by Google

the 10-year period and taken chances of such enhancement in values as would give him an equity to be realized by the forced sale of Corbin's lands and a division of the surplus proceeds. If due effect is not to be given to the agreement for a commission, then, to earn an interest in surplus proceeds or value, Bowman had the option either to be diligent to sell enough to repay Corbin in full, or to remain inactive and take chances on the market and a public sale at the end. But nothing could be further from the intention of the parties than the latter course. Corbin, who owned the lands, wanted them sold at private sale and his investment fully repaid within a fixed period. He offered Bowman not an interest or a lien, but compensation for faithful, active, and industrious services. To stimulate him to extra efforts he offered an opportunity to make more than the usual commission, and said that if within 10 years Bowman sold enough to repay him in full, not partially, he might have half the surplus. That diligence was expected by Corbin and promised by Bowman is clear beyond every doubt, and upon the measure of the diligence and its results depended the amount of compensation—if nothing was accomplished in the first five years, an abandonment of the contract followed; if sales were made but insufficient at the end of 10 years to repay Corbin in full, a commission of 5 per cent.; if sales were made sufficient at the end of 10 years to repay Corbin in full, then half of the surplus. This is the obvious reading of the two letters forming the contract, it was the construction put upon them by the parties during the progress of the business, and also the construction adopted by complainant in framing his bill.

Bowman did not acquire any interest in or lien upon the lands, and therefore he had no right to require a sale, by process of court or otherwise, to get Corbin's money out and so wind up the joint account. This fact must always be regarded in every consideration of Bowman's right under the contract. The lands remained the lands of Corbin, and it was his province to say how they should be sold and to prescribe the limit of time within which sales might be made. The theory of a winding-up process after 10 years by judicial sale or other proceedings against Corbin in invitum to create funds to repay his investment is wholly repugnant to the intention of the parties who made the contract. Certainly, if regard is to be had to the words they employed, they never contemplated that a failure by one-fourth to secure a return to Corbin of his investment should render the provision for the commission inapplicable, and entitle Bowman to that compensation which depended upon repayment to Corbin in full within the period agreed upon. For us to say otherwise would amount to a recasting of the contract according to our own notions.

Corbin's expressed desire, assented to by Bowman, was that he should get all his money out, and within 10 years. This is as plain as the language of laymen could make it. The most liberal construction of the phrase "wound up" that is permissible is that at the end of 10 years a sufficient length of time should be given to cast up the accounts to see where the parties stood and for settlement on the basis thus disclosed. Indeed, we might go further and admit that if sufficient lands had been sold for cash and notes to pay Corbin's in-

Digitized by Google

vestment the complainant might be entitled to half of the excess had he or some one by his procurement unconditionally offered to take and pay for sufficient of the outstanding notes at par and accrued interest to complete the payment in full to Corbin. Nothing less than this would have met Corbin's rights under the contract. What did the complainant do? On March 12, 1887, shortly before the end of the 10-year period, he wrote to Corbin:

"In case you are not willing to accept of the notes and mortgages you hold account of sales made I will make an offer to give or take and have proceeds applied in that account. I am prepared to cash these notes and mortgages at any price we agree upon. I will also fix a price upon the lands remaining unsold to give or take and thereby be able to close the account at once, or I am willing to divide the lands remaining unsold."

These were his specific propositions. It will be observed that in fixing the value of the notes and mortgages he says that it shall be "as agreed upon," when his sole legal right, unless the contract was changed, was to take the notes at par. He obtrudes into the situation an assertion of a right to agree or disagree upon the value of the notes. But more than this, he couples with the proposition another one, to wit, that he will fix a value upon the remaining lands for a give or take offer. It must be recalled that a mere disposition of the notes would not have been sufficient to enable the parties to wind up the contract. Additional lands to the amount of more than $6,000 must have been sold, and of course it was wholly repugnant to the contract and the rights of Corbin, however regarded, that the complainant should be allowed to fix the price of the lands for a disposition or division. Even if it were to be held that the limit of 10 years might be disregarded and the time opened up and enlarged for more sales if they could be made within a reasonable time, there is nothing whatever in this record indicating that on May 21, 1887, it was at all probable that sufficient additional lands could be sold short of several years thereafter to make up the deficit. It took 10 years to sell sufficient to discharge three-fourths of Corbin's investment after charging him with all outstanding purchase-money notes as cash. Measured by this experience, and assuming that market conditions would be substantially similar, it would require the allowance of more than three years' additional time to complainant to enable him to escape the operation of that clause of the contract which provides for a 5 per cent. commission. Again, in 1886, there were sold in round numbers 760 acres of land. If the same measure of success might have been expected in the years following, it would have taken nearly all of the years 1887 and 1888 to sell sufficient to wipe out the cash deficit if the lands were sold at the prevailing rate of $5 per acre. As a matter of fact the two sides of Corbin's investment account did not balance until December, 1897, more than 10 years after the expiration of the 10 year period agreed upon. It might be said, however, in this connection, that the lands were withdrawn from the complainant and he was not allowed to make the sales, but on the other hand they were put into the charge of another agent in 1888. From our knowledge of financial conditions which culminated in the crisis of 1893, it is doubtful that the market for real property for a number of years after 1887 was favorable to

Digitized by Google

the disposition of real estate. The trial court said in its decision upon the question of laches that during the years after the 10-year period the values of land declined. But all of this is ex post facto, and its principal value is to indicate the sea of uncertainty upon which we launch when we disregard the provisions made by the parties for the very contingency that arose and which they regarded as fair, equitable, and reasonable.

There is nothing whatever in this record until we come to the opinion of the trial judge, delivered in 1902, indicating that it was in the minds of the parties or their counsel that the contract could be so construed as to give a period beyond May 21, 1887, for the sale of additional lands to secure funds for the repayment of Corbin's investment so as to give complainant a proprietary interest in the excess. On October 5, 1886, complainant wrote to Corbin as follows:

"The time is near at hand when a settlement of the joint account *must* be made for the purpose of making an amicable settlement of the account I make you the following statement and proposition. The joint account commenced May 12, 1877, and by its terms will expire next May, hence the necessity of settlement."

He then stated an account, and, by understating Corbin's investment and by charging him with outstanding uncollected notes, showed the latter in debt to him. The word "must" in the first sentence of the letter was emphasized by being underscored. Moreover, the bill of complaint was framed upon the theory contended for by Corbin. In reciting the substance of the provisions of the contract it is averred:

"If the proceeds realized from said lands under said contract of copartnership, within 10 years from date thereof, should prove insufficient to pay said Austin Corbin for said lands, with interest as aforesaid, then said copartnership was to terminate and end; and in that case said John A. Bowman was to be paid out of the remaining assets of said copartnership, if sufficient for that purpose, and otherwise by said Austin Corbin, 5 per cent. of the proceeds of all sales of said lands theretofore made in full satisfaction of any and all claim in favor of said John A. Bowman on, in or to said copartnership assets or against said Austin Corbin."

(Of course the contract was not one of co-partnership. Shaeffer v. Blair, 149 U. S. 248, 13 Sup. Ct. 856, 37 L. Ed. 721.) The bill containing this averment was filed in the state court April 14, 1894. The same averment was repeated in the bill of revivor filed in 1898, 11 years after the expiration of the 10-year period. Both proceeded upon the theory that Corbin had been fully reimbursed his investment. We are of the opinion that under the clear facts of the case the decree below is contrary to both letter and intent of the contract, and the subsequent construction thereof by complainant himself for many years afterwards.

Complainant made an attempt to show that some dealings between Corbin and Bowman prior to the making of the contract were such as to give the latter an equitable interest in the lands, and that such equitable feature should be projected forward to qualify the contract that was made by the interchange of letters; but complainant wholly failed in the proof. There was also an attempt to show a voluntary continuation of the relations of the parties after May 21, 1887, but the com-

Digitized by Google

plainant swore in his affidavit in the matter of rehearing that he never made any request for an extension of the time. Moreover, there were but two sales made by the complainant after the 10-year period that were confirmed by Corbin. In one of them the contract of sale was doubtless made before, though the purchase-money mortgage was executed six days after, the expiration of the 10-year period. The other sale was made some time afterwards, but the circumstances surrounding it do not appear in the record. In each of these cases a conveyance was made by Corbin to the purchaser. But the complainant does not seriously contend that the time was extended by word or act of Corbin. The controversy is over the construction of the contract, and the complainant expressly complains that the few sales reported in 1887, after May 21st, were due to the fact that his authority as agent was impugned by Corbin's refusal to confirm what he did. The collection of the notes and mortgages that were outstanding on May 21, 1887, and the remittance of the collections to New York, was not done under the contract or in recognition of a continuation of it. The securities were payable at the complainant's bank, and it and Corbin's bank were mutual correspondents. What was done would have been done in the usual course of their business had no land contract existed.

The only remaining question is whether Corbin was entitled to 10 or to 7 per cent. interest upon his disbursements for taxes and expenses. The court allowed the latter. That he was entitled to interest at some rate was recognized by complainant in his letter of October 5, 1886, in which he includes interest in his tabulated statement. In casting up the accounts the trial court charged Corbin with 10 per cent. interest on every item of money which came to him from the sale of the lands from the date of its receipt to the date of the accounting May 21, 1887. In charging him with the uncollected purchase-money notes and mortgages, interest at the same rate was computed to the date of settlement. It needs no discussion to show that the taxes, foreclosure expenses, expenses for recording mortgages, etc., should be credited to Corbin in the joint account. Otherwise Corbin would not have stood in the same equal position with complainant had the venture reached the point where profits were to be divided. When cash proceeds, which came into Corbin's hands and upon which he was charged 10 per cent. interest, were properly paid out for taxes and expenses, it would follow that there should be a discontinuance of the 10 per cent. charge against Corbin to the extent of such disbursements. The same result is reached, however, by charging Corbin with interest at 10 per cent. upon all receipts, and crediting him with interest at 10 per cent. upon all such disbursements.

Five per cent. of the amount of proceeds of sales made by complainant under the contract, in cash and notes, equals $2,237.25, and for this amount he is entitled to a decree. It is equitable that the costs in the trial court where this result was made to appear should follow the recovery, and that complainant should bear the costs of the appeals to this court.

The decree of the trial court is reversed, with direction to enter a decree as above indicated.

Digitized by Google

SANBORN, Circuit Judge (dissenting). All agree that the contract was that the lands should be put into a joint account of Corbin and Bowman, and that they should remain there for 10 years. The question is, what were the rights and remedies of the parties at the expiration of this 10 years? The court below found that at the end of the 10 years this joint account had to its credit 6,445 acres of land worth $32,225, and notes and mortgages worth $11,600.55, and that it was indebted to Corbin in the sum of only $16,079.26, so that by the sale of the lands and notes it could be wound up, Corbin could get his money out and profits to the amount of $27,746.25 could be realized, and it held that the agreement of the parties was that in this state of the facts Bowman was entitled to have these profits divided. After a studious consideration of the record and of the opinion of my associates to the contrary, I am unable to agree with them, and I concur with the court below in its construction of this agreement. The question is, did these parties agree that if the joint account operated at the end of 5 years, and if at the end of 10 years it could be wound up so that Corbin could get his money out, Bowman should have half the profits? My views upon this question are these:

The question is, what was the contract? and there is no question whether or not time was its essence. If the contract was that if at the expiration of the 10 years Corbin had not got his money out Bowman should have nothing but 5 per cent. on his sales, he is entitled to that only. But if it was that, if at the expiration of the 10 years the joint account and the contract which created it could not be wound up so that Corbin could get his money out, he should have the 5 per cent., but that if it could be so wound up he should have half the profits, then he is entitled to half the profits, because it could have been thus wound up.

What might have been the rights of the parties if the joint account had not operated within the first five years, or if Bowman had not faithfully performed his part of the agreement, is irrelevant to the consideration or decision of this issue, because the joint account did operate within the five years, and Bowman did perform his part of the contract, and the true answer to it is in these words of the letter of May 12, 1877, which contain the proposition of Corbin that Bowman accepted:

> "I will figure up exactly the cost as allowed the doctor, put them in to you on joint account to run 10 years at 10% annual interest; I to have my money out first, and when it comes out you to have half the profits. I want this limited to 10 years, because I don't want it running indefinitely in case it don't work. * * * But the contract shall run for ten years. Then if at the expiration of ten years it cannot be wound up, and I get my money out, I will agree that you will have 5% allowed on all sales that have been made, so that you will, in any event, not be doing this absolutely for nothing."

Bowman by his answer to this letter of May 21, 1877, did not intend to change, and did not reject or modify, any part of the provision of this proposition relative to the continuance and the winding up of the joint account. When he wrote in that letter the words, "I am to sell the lands and turn over all the proceeds to him until all his money invested with 10% interest is paid, etc., that at the end of the 10 years

Digitized by Google

if he shall not have received all his money and interest out of the sales, the joint account shall be wound up and I shall have 5% for all the lands I have sold, etc., etc., as will more fully appear by reference to the copy of the letter on your books," he was simply identifying the proposition he was accepting as the one contained in the letter of May 12, 1877, as it was copied on the books of Corbin, and he was neither attempting to accurately state the proposition, as clearly appears by his repeated use of "etc.," and his reference to Corbin's books, nor to in any way reject or modify it. That he was not attempting to change and did not change it, but that he accepted it as it was written in Corbin's letter to which he referred, is demonstrated by these words in a later part of his letter:

"You may settle it down that I will accept that proposition fully and will do my level best to sell the land and look after the taxes and do everything such a proposition implies whether expressed in it or not."

The gist of the proposition and of the contract was that the lands should be put into a joint account of Corbin and Bowman, that Bowman should sell these lands, that out of this joint account Corbin should be first paid his advances and interest, and that the profits should be divided between them. All the other provisions of the contract, the 10 years during which the account and the sales should continue, its winding up, the payment of the 5 per cent. if upon its winding up it failed to pay out, were subordinate, modal, and incidental to this main purpose and substance of the contract.

When Corbin's proposition was accepted, the lands were placed in the joint account of Bowman and himself. From the moment of the acceptance of this proposition by Bowman, Corbin held these lands in trust for the joint account of himself and Bowman, to permit the latter to sell them for 10 years, to reimburse himself from the joint account for his advances, and to divide the profits of the sales and of the property in the joint account equally between himself and Bowman. When the 10 years expired he held them subject to this trust in this joint account under this contract. In the absence of an agreement relative to the rights and remedies of the parties at the expiration of this 10 years, there could be no doubt that any court of equity on the application of either of the cestuis que trust, Corbin or Bowman, would have decreed a winding up of the joint account, a sale of the trust property therein, the payment of Corbin's advances out of its proceeds, and the equal division of the remainder between them. The lands, notes, and mortgages in this joint account were charged with a trust to pay these advances and one half the remainder to Corbin, and by the same trust and to the same extent to pay the other half of the remainder to Bowman. Seymour v. Freer, 75 U. S. 202, 203, 206, 207, 213, 214, 215, 19 L. Ed. 306; Shaeffer v. Blair, 149 U. S. 248, 256, 257, 258, 13 Sup. Ct. 856, 37 L. Ed. 721. In Seymour v. Freer, the agreement was that Price should buy the lands, that Seymour should pay for them and take the title in his name, that the lands should be sold within five years, and that Price should have one-half the profits. Price bought the lands, Seymour paid for them and took the title in his name, none of them were sold within the five years, and if they had

Digitized by Google

been sold at the expiration of the five years there would have been no profit. Nevertheless, the court held that Price was entitled to the enforcement of the trust and to his share of the profits. It said:

"We think Seymour took the legal title in trust for the purposes specified. A trust is where there are rights, titles, and interests in property distinct from the legal ownership. In such cases, the legal title, in the eye of the law, carries with it, to the holder, absolute dominion; but behind it lie beneficial rights and interests in the same property belonging to another. These rights, to the extent to which they exist, are a charge upon the property, and constitute an equity which a court of equity will protect and enforce whenever its aid for that purpose is properly invoked. Interests in real estate, purely contingent, may be made the subjects of contract and equitable cognizance, as between the proper parties. The object of the trust here was to sell the property within the time limited, and, after deducting from the proceeds the outlay, with interest and taxes, to pay over to Price one-half of the residue. To this extent, Seymour was a trustee, and Price the cestui que trust. They had a joint interest in the property. Seymour held the legal title, but the rights of Price were as valid in equity as those of Seymour were at law.

"If Seymour, within the five years, had conveyed the property to one of his children, by way of advancement, or to a stranger, otherwise than upon a bona fide sale for its fair value, the grantee would have taken the title subject to the trust upon which Seymour held it, and a court of equity would have followed the property and dealt with it in all respects as if the title had still remained in Seymour. If a valid sale had been made, the trust would have followed and bound the proceeds in like manner as it bound the property."

So here at the expiration of the 10 years the lands and notes were charged with a trust to pay Bowman for the services he had rendered one-half of the profits, and were subject to his right to enforce the execution of this trust in equity by a sale of the property and the application of the proceeds according to its terms, unless there was some clear and unequivocal agreement that this trust was discharged and that this right to enforce it in equity and to receive the benefit of it was forfeited. There was no such agreement.

There was a provision that the joint account and the contract should run and be limited to 10 years, that Corbin should have his money out first, and that Bowman should have half the profits. But there was no stipulation in this agreement that, if at the expiration of the 10 years Corbin's money had not been paid out, Bowman should not receive or should forfeit his half of the profits or his equitable right to the customary sale of the trust property in chancery to pay the claim with which it was charged and to distribute the remainder among those who were equitably entitled thereto. On the other hand, the agreement was made in recognition of this right and on the assumption that it would be enforced. It reads:

"Then, if at the expiration of ten years it cannot be wound up, and I get my money out, I will agree that you will have 5% allowed on all sales that have been made, so that you will, in any event, not be doing this absolutely for nothing."

The contract was that Bowman should have the right, and should discharge the duty, to sell these lands for 10 years, and should have for his compensation one-half the profits; that to accomplish this result Corbin should put these lands into a joint account of Corbin and Bowman, and should thereby hold them and their proceeds in trust to repay his advances and interest and to divide the profits

Digitized by Google

equally between himself and Bowman; and that, if at the expiration of the 10 years this joint account and trust could not be wound up so that Corbin could get his money out, he would pay Bowman 5 per cent. on the sales he made so that he would "not be doing this absolutely for nothing." At the expiration of the 10 years the joint account, the trust property, and the contract which created it could be wound up in the customary method pursued by courts of equity to wind up trusts, joint accounts, and contracts of this nature by a sale of the property involved, Corbin could get his money out, and profits to the amount of $27,746.25. Why was not Bowman entitled to one-half of these profits? The parties contemplated and agreed that at the expiration of the 10 years the joint account and the trust property therein should first be wound up and closed out; that, if its proceeds paid Corbin's money back and left a profit, Bowman should have one-half of it. If they failed to pay Corbin's advances so that no profits accrued, and so that Bowman could get nothing from the joint account, then, and in no other event, in order that Bowman might not do his work for nothing whatever, Corbin would pay him the 5 per cent. on the sales. As at the expiration of the 10 years the joint account and the trust property therein could be wound up, and Corbin could get his money out and a large profit thereby, Bowman was entitled to one-half of this profit, and he was not entitled to 5 per cent. upon his sales.

One of the prayers of the bill is that the complainant may have "such other and further relief as may be just." The rights and equities of Bowman and his successor in interest, the complainant, were created and fixed by the contract of May, 1877, and in my opinion they have neither been forfeited nor destroyed by any of the misstatements relative to their existence or extent found in the negotiations for a settlement in 1886, or in the pleadings of the complainant made at the time when the counsel who drew them was evidently erroneously informed and hence alleged that Corbin's money and interest had been paid back to him before the expiration of the 10 years. In that supposed state of the facts the rights of the parties, in case it had not been so paid back, were immaterial, and an erroneous statement regarding them could not have worked an estoppel in any event, because Corbin knew the contract as well as Holmes. Courts of equity do not forfeit just claims for thousands of dollars on account of exaggerated or mistaken statements of the rights or equities of litigants in their negotiations or pleadings, where they have not misled their opponents to their injury. Nor are these various statements persuasive to my mind of the meaning or effect of this contract, because, for the reasons which have been stated, the plain words of the agreement, in the light of the established rules and practice in equity, are in my judgment unambiguous, clear, and conclusive upon that question.

In the discussion of the vital question in this case the amounts found by the court below have been used because it was immaterial to the argument whether Corbin should be allowed 7 per cent. or 10 per cent. upon the disbursements mentioned in the opinion of the majority. I agree with them that he should be allowed 10 per cent., and with this modification the decree ought, in my opinion, to be affirmed.

Digitized by Google

(154 Fed. 606.)

ROGERS et al. v. PENOBSCOT MINING CO. et al.

(Circuit Court of Appeals, Eighth Circuit. June 27, 1907.)

No. 2,421.

1. SPECIFIC PERFORMANCE—EXECUTION OF TRUST—EQUITABLE OWNERSHIP OF STOCK—SUFFICIENCY OF FACTS.

The bill set forth these facts: B. and M. agreed that B. should procure options to purchase certain mining claims in M.'s name; that they should organize a corporation with 500,000 shares of stock; that this stock should be issued to M., who should place 300,000 shares of it in the treasury of the corporation, transfer 50,000 shares to B., convey the options to the corporation, and furnish the money, either by loans to the corporation or by purchase of the capital stock, to pay the unpaid balances of the purchase prices of the mining claims. B. procured the options. The corporation, the P. Co., was organized. M. conveyed the options to it, took the 500,000 shares of stock, and placed 300,000 shares in the treasury. The P. Co. paid the unpaid balances of the purchase prices of the mining claims, and M. took the deeds thereof to himself. The complainants were the assigns of 11,300 of the 50,000 shares of stock M. agreed to transfer to B., and they brought suit in equity against M. and the P. Co. to compel him to convey the mining claims to the corporation.

Held: (1) The bill stated a good cause of action in equity to enforce specific performance of a contract relating to real estate and to compel the execution of the trust created by the agreement and by the complete performance of it on the part of B.

(2) The facts stated in the bill constituted the complainants the equitable owners of the 11,300 shares of stock assigned to them.

(3) Equity rule 94 and the other rules applicable to stockholders' suits do not control this suit, because complainants' cause of action existed independently of, and antedated, their rights as stockholders.

[Ed. Note.—For cases in point, see Cent. Dig. vol. 47, Trusts, § 102.]

2. APPEAL—JURISDICTION—ASSIGNMENT OF ERRORS REQUISITE TO OBJECTIONS FOUNDED IN PROCEDURE—TOTAL ABSENCE OF POWER NOTICED WITHOUT.

A defect of jurisdiction of the trial court, such as want of diversity of citizenship, which cannot be waived, and which discloses the total absence of power in that court to take any affirmative action in the suit, will be noticed by the appellate court sua sponte, without exception or specification of error.

But objections to the jurisdiction of the trial court, such as lack of proper service of a lawful summons, which condition the method of the exercise of the power of the court and which may be waived, must be presented to the appellate court by a proper assignment of errors, which gives the opposing party an opportunity to prepare a proper record for their consideration.

[Ed. Note.—For cases in point, see Cent. Dig. vol. 3, Appeal and Error, § 2971.]

3. SAME—CROSS-ERRORS NOT ASSIGNABLE.

Cross-errors are not assignable in a federal court.

Parties who have secured all the relief they seek cannot appeal or sue out a writ of error, nor can they, by assigning or arguing cross-errors, confer jurisdiction on a national appellate court to consider or determine alleged erroneous rulings not otherwise presented. Guarantee Co. v. Phenix Ins. Co., 29 C. C. A. 376, 379, 124 Fed. 170, 173.

[Ed. Note.—For cases in point, see Cent. Dig. vol. 2, Appeal and Error, § 947.]

4. REMOVAL OF CAUSES—JURISDICTION—INDISPENSABLE PARTIES ONLY CONSIDERED.

In a determination of the jurisdiction of the national courts and the right to remove causes of action to them, indispensable parties only should

Digitized by Google

be considered, because all others may be dismissed or disregarded if their presence will oust or restrict the jurisdiction or the right.

[Ed. Note.—For cases in point, see Cent. Dig. vol. 42, Removal of Causes, § 71.]

5. PARTIES—INDISPENSABLE—PROPER.

An indispensable party is one who has such an interest in the subject-matter of the controversy that a final decree between the parties before the court cannot be made without injuriously affecting his interests or leaving the controversy in such a situation that its final determination may be inconsistent with equity and good conscience.

Every other party who has any interest in the controversy or the subject-matter which is separable from the interest of the parties before the court, so that it will not necessarily be directly and injuriously affected by a decree which does complete justice between them, is a proper party.

If a proper party is incapable of being made a party to the suit because beyond the jurisdiction, or if his joinder would oust the jurisdiction of the court as to the other parties before it, the suit may proceed without him, and the decree will not affect his interests.

The P. Co. is a proper, but not an indispensable, party to the suit, because a decree which will do complete justice between the other parties to the controversy may be rendered without injuriously affecting its interests.

[Ed. Note.—For cases in point, see Cent. Dig. vol. 37, Parties, §§ 41, 53.]

6. ACTION—SPLITTING CAUSE OF ACTION—ASSIGNEE OF PART MAY MAINTAIN SUIT IN EQUITY.

An assignee of a part of a credit or of a chose in action cannot, without the consent of the obligor, maintain an action at law upon it.

But such a part owner may maintain a suit in equity upon his claim, upon condition that he makes the owners of the other portions of the claim parties to the suit.

And the assignee of a part of the interest of a cestui que trust in real or personal property without the consent of the assignor may maintain such a suit to enforce the execution of the trust.

[Ed. Note.—For cases in point, see Cent. Dig. vol. 1, Action, § 551.]

7. EQUITY—DISMISSAL—FAILURE TO MAKE OTHER PART OWNERS PARTIES AMENDABLE—IT WILL NOT SUSTAIN DISMISSAL ON MERITS.

The failure to make other part owners of the chose in action parties to such a suit is a curable defect, and it will not sustain a judgment of dismissal of the bill on the merits. The bill should be retained until the complainants have reasonable opportunity to amend it and to bring in such part owners, or to show in their amended bill an excuse for their absence, under the practice in equity in the federal courts.

[Ed. Note.—For cases in point, see Cent. Dig. vol. 19, Equity, § 759.]

8. PARTIES—SUCH PART OWNERS NECESSARY, BUT NOT INDISPENSABLE, PARTIES.

Under the old chancery rule such part owners would be necessary parties to the suit, and they should be joined, if practicable.

But under the modification of that rule which prevails in the federal courts they are not indispensable parties, and if they are beyond the jurisdiction of the court, or if their presence would oust its jurisdiction over other parties before it, the suit may proceed without them, because a decree which does complete justice between the parties before the court may be rendered without directly and injuriously affecting their interests.

9. CONTRACTS—PLEADING—AVERMENT OF IS OF WRITTEN CONTRACT, IF WRITING REQUISITE.

Where a writing is indispensable to a valid contract, a pleading of a contract which does not affirmatively disclose that it was made by parol is a pleading of a written agreement.

[Ed. Note.—For cases in point, see Cent. Dig. vol. 23, Frauds, Statute of, § 353.]

Digitized by Google

10. TRUSTS—VENDORS TRUSTEES FOR VENDEES.

In equity, vendors of real estate and those claiming under them hold their titles in trust for their vendees.

[Ed. Note.—For cases in point, see Cent. Dig. vol. 47, Trusts, § 123.]

11. EQUITY—ADEQUATE REMEDY—ACTION AT LAW IS NOT FOR BREACH OF CONTRACT TO CONVEY LAND.

An action at law does not afford an adequate remedy for the breach of a contract to convey real estate or for a failure to execute a trust with which it is charged.

12. SAME—MULTIFARIOUSNESS—JOINDER OF TWO CAUSES FOR SAME RELIEF IS NOT—NO MULTIFARIOUSNESS WHERE SINGLE COMMON POINT OF LITIGATION.

A joinder of two causes of action against the same party for the same relief, one against him as an individual and one against him as an officer, does not make a bill multifarious.

No bill is multifarious which presents a common point of litigation, the decision of which will affect the entire subject-matter and settle the rights of the parties to the suit.

[Ed. Note.—For cases in point, see Cent. Dig. vol. 19, Equity, § 342.]

(Syllabus by the Court.)

Appeal from the Circuit Court of the United States for the District of South Dakota.

These are appeals from two decrees in the same suit, one of which sustained the separate demurrer of the Penobscot Mining Company to the bill of the complainants and dismissed it, and the other of which sustained the separate demurrer of Alexander Maitland to the same bill and dismissed it. The suit was brought by Rogers, Rosenthal, Thomas, and Maloney against Maitland and the Penobscot Mining Company, to compel Maitland to convey certain mining claims to the Penobscot Company, a corporation of South Dakota, to secure a decree that he had no right, title, or interest in these claims, to enjoin him from disposing of or incumbering them, and for general relief. The facts stated in the bill upon which the complainants based their prayer were these: In the spring of 1902 F. R. Byrns and the defendant Maitland made an agreement that Byrns should procure options to purchase three groups of mining claims situated in South Dakota in the name of Maitland; that they would organize a corporation with a capital stock of 500,000 shares, of the par value of $1 per share; that this stock should be issued to Maitland; that he should convey to the corporation all the options, should return 300,000 shares of stock to the treasury of the company, should convey to Byrns 50,000 shares, and should furnish the money to pay the unpaid balances upon the options and to further develop the properties, either by loans which he should make to the corporation or by the purchase of its treasury stock. Byrns obtained the options in Maitland's name and thus completely performed his part of the agreement. Maitland and Byrns organized the defendant, the Penobscot Mining Company. In accordance with their agreement, Maitland conveyed the options to it, the 500,000 shares of stock were issued to him, and he placed 300,000 shares of it in the treasury of the corporation. The unpaid balances owing upon the options were thereupon paid by the Penobscot Company for its own use and benefit; but the deeds of the mining claims were taken from the former owners to Maitland, and not to the company. In February, 1903, Byrns had assigned 1,000 of the 50,000 shares of the stock of the company to which he was entitled to one Adams, and thereupon, in pursuance of the former contract between him and Maitland, he and Maitland made a second agreement to the effect that the latter would transfer to Byrns 49,000 shares of the stock, less one-half of the shares which should ultimately be found to be due, to one Bradburn. The number of the shares due to Bradburn was determined to be 13,000 before the commencement of this suit, so that the number due to Byrns became 42,500. In April, 1903, Byrns sold and assigned this stock and all his rights under his contract to the United States Mines Company. Subsequently this company transferred to the complainant Rogers 2,500 shares,

Digitized by Google

to the complainant Maloney 1,800 shares, and to the complainant Rosenthal 7,000 shares of the capital stock of the Penobscot Company out of the shares coming to the United States Mines Company from Maitland under Byrns' assignment, and Rosenthal assigned one-half of his 7,000 shares to the complainant Thomas. Maitland holds a majority of the stock and is the treasurer of the Penobscot Company, and he controls its board of directors. He has refused to convey the mining claims to the Penobscot Company, and has refused to assign or deliver to the complainants the shares of stock to which they are entitled. The complainants have demanded of the Penobscot Company that it bring suit to compel a conveyance by Maitland of the mining claims to itself, and have demanded of Maitland and the Penobscot Company that they issue and deliver to them the shares of the capital stock of the company which have been assigned to them, and the defendants have refused to do so. Upon this state of facts the court below sustained the demurrer of the defendants to the bill, upon the ground that the bill failed to show that the complainants were either the legal or equitable owners of stock of the Penobscot Company.

Chambers Kellar, Eben W. Martin, and Norman T. Mason, for appellants.

William L. McLaughlin, Robert N. Ogden, and Adoniram J. Plowman, for appellees.

Before SANBORN and HOOK, Circuit Judges, and PHILIPS, District Judge.

SANBORN, Circuit Judge, after stating the case as above, delivered the opinion of the court.

The demurrers of the defendants were separate. They were sustained on the merits and on the same ground—that the complainants did not show themselves to be either legal or equitable owners of stock of the Penobscot Company. The assignments of error specify this ruling alone. But counsel for the appellants contend that the court below was without jurisdiction of this case because the complainants were citizens, and the Penobscot Company was a corporation, of the state of South Dakota, and counsel for the appellees insist that the court was without jurisdiction because the defendants were not lawfully served with a legal summons. The first question is fundamental. It cannot be waived. It conditions the power of the court below to take any action in the case, except to remand the case to the state court from which it was removed, and an appellate court is not at liberty to disregard it, although the ruling upon it is not specified as error.

The second objection assails the method of the exercise of the power of the court. It relates to procedure only. It may be waived by appearance, by trial upon the merits, by failure to object at the proper time, and hence it should not be and may not be considered until an assignment of errors has been made which presents it and an opportunity has been afforded both parties to prepare a record for its consideration by an appellate court. The appellees, who have secured by the decree below all the relief which they seek, cannot now appeal, nor can they confer jurisdiction upon an appellate court to hear, to consider, or to decide questions suggested by an assignment or by an argument of cross-errors. Guarantee Co. v. Phenix Ins. Co., 59 C. C. A. 376, 379, 124 Fed. 170, 173. They must await their defeat. If that never comes, they will never suffer from the errors which they seek to suggest. If a decree is ultimately rendered against them, they

Digitized by Google

will have an opportunity to secure a review of the rulings they challenge. They cannot be now considered. We turn to the first question.

Did the fact that the Penobscot Company was a corporation of the state of the citizenship of the complainants oust the jurisdiction of the Circuit Court? In a determination of the jurisdiction of the national courts and the right to remove causes of action to them, indispensable parties only should be considered, because all others may be dismissed or disregarded, if their presence would oust or restrict the jurisdiction or the right. Boatmen's Bank v. Fritzlen, 135 Fed. 650, 658, 68 C. C. A. 288, 296; Geer v. Mathieson Alkali Works, 190 U. S. 428, 432, 23 Sup. Ct. 807, 47 L. Ed. 1122; Bacon v. Rives, 106 U. S. 99, 104, 1 Sup. Ct. 3, 27 L. Ed. 69; Wormley v. Wormley, 8 Wheat. (U. S.) 421, 451, 5 L. Ed. 651; Wood v. Davis, 18 How. (U. S.) 467, 475, 15 L. Ed. 460; Sioux City Terminal R. & W. Co. v. Trust Co. of N. A., 82 Fed. 124, 126, 27 C. C. A. 73, 75; Cella, Adler & Tilles v. Brown (C. C.) 136 Fed. 439, 442; Cella v. Brown, 75 C. C. A. 608, 620, 144 Fed. 742, 754. An indispensable party is one who has such an interest in the subject-matter of the controversy that a final decree cannot be rendered between the other parties to the suit without radically and injuriously affecting his interest, or without leaving the controversy in such a situation that its final determination may be inconsistent with equity and good conscience. Every other party who has any interest in the controversy or subject-matter which is separable from the interest of the other parties before the court, so that it will not necessarily be directly and injuriously affected by a decree which does complete justice between them, is a proper party to a suit. But he is not an indispensable party, and if his presence would oust the jurisdiction of the court the suit may proceed without him. Sioux City Terminal R. & W. Co. v. Trust Co. of N. A., 27 C. C. A. 73, 75, 82 Fed. 124, 126.

The foundation of this suit was the agreement of 1902 between Maitland and Byrns and the latter's performance of it. Byrns contracted to obtain the options to purchase the real estate in Maitland's name, and in consideration thereof Maitland agreed that he would put the title to the mining claims in the Penobscot Company, and that he would retain three-fourths and convey to Byrns one-fourth of the 200,000 shares of stock of the corporation which were to be issued for the options. It is true that Maitland's alleged agreement was not in terms to vest the title to the mining claims in the corporation, but to convey to it the options upon them. But it was so in legal effect, because he agreed to vest the title to the options in the company and either by loans or by the purchase of the treasury stock to furnish the money to pay the unpaid balances of the purchase prices of the claims. In the face of this agreement, with the title to the options in the company, he could not hold the title to the claims against the company, or against any party or privy to the agreement of 1902. As soon as the company paid the unpaid balances on the options, the vendors and Maitland, who took his deed from them, held the title to these claims in trust for the company and for the parties to the original agreement. Vendors of real estate and those claiming under them hold their titles in trust for their vendees. Bispham's Principles of Equity, § 364. The legal effect, there-

Digitized by Google

fore, of Maitland's contract of 1902 was that he would vest the title to the mining claims in the Penobscot Company and the title to 50,000 shares of its stock in Byrns, so that Maitland should hold the 150,000 shares and Byrns 50,000, subject to any liability of the company for loans, or to any sales of treasury stock to Maitland to raise the money to pay the unpaid balances of the purchase prices under the options. Byrns completely performed his contract. He secured the options. Thereupon the contract became executed on his part and executory on Maitland's part. Thereafter Maitland held the options, the titles which followed them, and the 200,000 shares of stock he obtained by virtue of the contract, in trust to convey the titles to the company and to transfer the 50,000 shares to Byrns or his assigns, and a perfect cause of action in equity had accrued to Byrns to enforce the specific performance of the contract and the execution of the trust created under it. Howe v. Howe & Owen B. B. Co., 83 C. C. A. 536, 154 Fed. 820, decided May 1, 1907. The complainants are assigns of Byrns and stand in his shoes. The relief they pray is that Maitland convey the titles to the mining claims to the company, that he be enjoined from otherwise disposing of or incumbering them, and that they have such further relief as may be equitable. The Penobscot Company was not a party to the contract whose performance this suit is brought to enforce. Its interests cannot be injuriously affected by any decree which shall finally adjudicate the controversy between the other parties to this suit, and the complainants seek no relief against it. That company was not, therefore, an indispensable party to the suit, and as the citizenship of the complainants and the defendant Maitland, the indispensable parties to it, was diverse, the court below had jurisdiction of it, and the motion to remand it to the state court was properly denied.

Did the bill set forth facts sufficient to constitute a cause of action in equity? The negative answer to this question rendered by the court below is based on its finding that the bill failed to show that the complainants were either legal or equitable owners of stock of the Penobscot Company. But this is not the ordinary suit by stockholders to protect or enforce the rights of their corporation, which its officers refuse to guard or urge, and it is not controlled by the rules which apply to such an action. The complainants' cause of action does not rest alone upon the fact that they are entitled to become stockholders of the Penobscot Company and hence to enforce its legal claims. Its foundation lies deeper. It inheres in the contract of 1902. It antedates the Penobscot Company, which is a mere creature or tool of that contract, and it would have existed if that company had never been. It accrued the moment Byrns procured and vested in Maitland the title to the options to purchase the mining claims. From that time Maitland held every right and title he acquired pursuant to that contract. He held the options, the title to the mining claims, the title to the 50,000 shares of stock, in trust for Byrns and his assigns according to the terms of that agreement. From that time Maitland was a trustee, and Byrns and his assigns were cestuis que trust, and a cause of action existed in their favor to enforce the execution of the trust and the specific performance of the contract, and the rules of law and practice applicable to such a suit and not those applicable to a stockholders' action govern this proceeding.

Digitized by Google

The fact that a cause of action subsequently accrued to the Penobscot Company and to its stockholders to compel Maitland to convey to the corporation the title to the mining claims cannot and does not destroy or impair the antecedent right of Byrns and his assigns to enforce the execution of the trust with which the property which Maitland acquired stood charged the moment Byrns' part of the contract of 1902 became executed and Maitland's part remained executory. Moreover, Maitland agreed by the contract of 1902 that he would transfer to Byrns 50,000 shares of the stock of the corporation which he had agreed to organize, and as Byrns had performed his part of this agreement he and his assigns became equitably entitled to a transfer of this stock from Maitland, and, as equity deems that done which ought to have been done, they became the equitable owners of this stock as soon as the Penobscot Company was organized and the 200,000 shares were issued to Maitland for the options which Byrns had secured.

Much is found in the briefs in this case about the contract of February, 1903, wherein Maitland in effect agreed to transfer to Byrns 42,500 shares of the stock of the Penobscot Company, and counsel argue this case as though that contract was the foundation of the rights of the complainants. But under the averments of the bill that agreement was made in pursuance of the contract of 1902 and in consideration thereof, and its only effect was to reduce the number of shares to which Byrns and his assigns were entitled from 50,000 to 42,500. If that agreement had never been made, Byrns and his assigns would have been entitled to the 50,000 shares of stock. By that agreement he consented that 6,500 of his 50,000 shares should be given to Bradburn in settlement of a lawsuit. But the right of Byrns and his assigns to the conveyance by their trustee, Maitland, of the title to the mining claims to the company, which he organized pursuant to the agreement of 1902, remained unimpaired.

The brief of counsel for the appellees bristles with arguments in support of the theory that the complainants are entitled to no relief, many of which overlook their right as cestuis que trust to enforce the execution of the trust created by the performance by Byrns of the contract of 1902, and rest on the erroneous assumption that their only rights arise out of the agreement of 1903. They say (1) that the bill contains no allegation that the contract of 1902 was in writing, and that no valid agreement for the conveyance of any interest in real estate can be made by parol, and no trust in relation to real estate can be created and declared save by a written instrument or by operation of law. But the bill contains an averment that Maitland and Byrns made the agreement of 1902 in relation to real estate which is specifically described in the bill, and it does not show that this contract was not in writing, and where a written agreement is indispensable to a valid contract a plea of a contract which does not affirmatively disclose the fact that it was made by parol is a plea of a written agreement. Barnsdall v. Waltemeyer, 142 Fed. 415, 417, 73 C. C. A. 515, 517; Wilhite v. Skelton, 78 C. C. A. 635, 149 Fed. 67, 71. And where an agreement relative to the conveyance of real estate is executed by one of the parties and executory on the part of the other, the latter holds his interest therein by operation of law, in trust for the former in ac-

Digitized by Google

cordance with the terms of the contract. Bispham's Principles of Equity, § 364; Howe v. Howe & Owen B. B. Co., supra.

They say: (2) That the contract is indefinite as to the time when the stock is to be transferred and as to the amount to be conveyed to Byrns, Traver, and Bradburn. But the time was immediately after Maitland received the 200,000 shares, and the amount was definite in the contract of 1902, and any uncertainty in the subsequent contract of 1903 became certainty before this suit was instituted. (3) That the contract of 1903 was a mere offer to sell personal property; (4) that the complainants had an adequate remedy at law; (5) that the contract was not mutual, in that Byrns, Bradburn, and Traver did not agree to accept the stock; and (6) that the contract of 1903 was an agreement to transfer stock, personal property, and is therefore incapable of specific performance. But the suit is to enforce the execution of the trust created by Byrns' performance of the agreement of 1902. While the court may undoubtedly decree in this suit that Maitland shall convey the shares of stock, because it may do complete justice between the parties, the gravamen of the bill is the specific performance of the contract of 1902 and the execution of the trust created under it. The chief subject of that contract was real estate, and the main relief sought here is Maitland's conveyance of that real estate to the Penobscot Company in execution of the trust created under that agreement. An action at law fails to afford an adequate remedy for the breach of a contract to convey real estate, or for a refusal to execute a trust with which it is charged, because it will not place the parties in the same situation in which they were before the agreement was made, and because it is not prompt, complete, and efficient. Boyce's Ex'r v. Grundy, 3 Pet. (U. S.) 215, 7 L. Ed. 655; Williams v. Neely, 134 Fed. 1, 10, 67 C. C. A. 171, 180, 69 L. R. A. 232; Castle Creek Water Co. v. City of Aspen, 76 C. C. A. 516, 518, 146 Fed. 8, 11; Wilhite v. Skelton, 78 C. C. A. 635, 149 Fed. 67, 72. The contract was mutual. Byrns agreed to purchase and did obtain options for which the 200,000 shares of stock were issued to Maitland. Byrns became a cestui que trust and Maitland the trustee of one-fourth of the title to these lands, of one-fourth of the Penobscot Company, which Maitland controlled, and of one-fourth of the 200,000 shares of stock, for the benefit of Byrns and his assigns. The subsequent assignments of Byrns and his assigns conveyed separate and definite interests in this property held in trust by Maitland, $^{2500}/_{50000}$ to Rogers, $^{1800}/_{50000}$ to Maloney, $^{3500}/_{50000}$ to Rosenthal, and $^{3500}/_{50000}$ to Thomas, and thereby constituted them cestuis que trust of Maitland, entitled to all the rights and remedies of their original assignor Byrns. It is said that the bill fails to comply with rule 94 in equity. But that rule is inapplicable to this case, because the rights of the complainants are not founded on their ownership or rights in the stock of the Penobscot Company alone, but in the prior agreement of 1902, which antedates that corporation, and from which that company sprang.

Counsel insist that the bill is multifarious, in that it unites a cause of action against Maitland, the individual, with one against Maitland, the officer of the corporation. But no relief is prayed against him in

Digitized by Google

his representative character, and all that is averred of him as an officer is but incidental to the statement of the cause of action against him as an individual. Moreover, this bill presents a common point of litigation, the decision of which will affect the entire subject-matter and settle the rights of all the parties to the suit, and no bill is multifarious which presents such a common point. Brown v. Deposit Co., 128 U. S. 403, 9 Sup. Ct. 127, 32 L. Ed. 468; Hayden v. Thompson, 17 C. C. A. 592, 71 Fed. 60; Kelley v. Boettcher, 29 C. C. A. 14, 85 Fed. 55; Curran v. Campion, 29 C. C. A. 26, 29, 85 Fed. 67, 70. Nor is a bill which unites a cause of action on behalf of the complainants and a cause of action on behalf of a corporation defendant, where the same facts sustain each cause and warrant the same relief. Jones v. Missouri-Edison Electric Co., 75 C. C. A. 631, 643, 646, 144 Fed. 765, 777, 780. The bill in hand is not multifarious.

Counsel argue that the separate demurrer of the Penobscot Company was properly sustained because no cause of action for the transfer by the company of the stock to the complainants is stated in the bill and no relief against it is prayed. These facts tend to sustain the position that this corporation was not an indispensable party to the suit. But every party who has an interest in the controversy or subject-matter separable from the interest of other parties to the suit, so that it will not be directly and injuriously affected by a decree which does justice between them, although not an indispensable party, is a proper party to a suit in equity, and may be lawfully joined. The Penobscot Company has such an interest, because the relief sought by the complainants is the conveyance to it of the titles to the mining claims held by Maitland. It is therefore a proper party to the suit. It is not indispensable that all the parties to a suit in equity should have an interest in all the matters contained in the litigation. It is sufficient if each party has an interest in some essential matter involved in the suit and these matters are connected with the others. Brown v. Deposit Co., 128 U. S. 403, 412, 9 Sup. Ct. 127, 32 L. Ed. 468; Jones v. Missouri-Edison Electric Co., 75 C. C. A. 631, 646, 144 Fed. 765, 780.

Another contention of counsel for the appellees is that the conveyances of Byrns and his assigns made the complainants "assignees of distinct moieties" of the rights and interests of Byrns, and that they cannot maintain a suit for the specific performance of the contract with him, because a portion of a credit or of a chose in action cannot be assigned without the assent of the debtor. It is true that an assignee of part of a credit or of a chose in action founded thereon cannot maintain, without the assent of the debtor, an action at law thereon, because a creditor may not split his cause of action and subject the debtor to the annoyance of several actions to recover a single claim. Mandeville v. Welch, 5 Wheat. (U. S.) 277, 288, 5 L. Ed. 87; Thomas v. Mining Co., 54 Cal. 578; Russell v. Ferguson, 9 Martin 647; Weinstock v. Bellwood, 75 Ky. 139; Burditt v. Porter, 21 Atl. 955, 63 Vt. 296, 25 Am. St. Rep. 763; Shankland v. City of Washington, 5 Pet. (U. S.) 389, 395, 8 L. Ed. 166; Carter v. Nichols, 5 Atl. 197, 58 Vt. 553; Crosby v. Loop, 13 Ill. 625, 628; Otis v. Adams, 27 Atl. 1092, 56 N. J. Law, 38; Milroy v. Spurr, etc., Co., 43 Mich. 231, 5 N. W. 287; Snedden v.

Digitized by Google

Harmes, 5 Colo. App. 477, 39 Pac. 68. Decisions may also be found which erroneously apply this rule to suits in equity. Burnett v. Crandall, 63 Mo. 410; Getchell v. Maney, 69 Me. 442, 444, 40 Am. Rep. 388; Johnson County v. Bryson, 27 Mo. App. 341, 349; Fourth National Bank v. Noonan, 88 Mo. 372, 377; Cook v. Bidwell (C. C.) 8 Fed. 452, 456; Appeals of City of Philadelphia, 86 Pa. 179, 182; C. & N. W. Ry. Co. v. Nichols, 57 Ill. 464, 466; Kansas City, M. & B. R. Co. v. Robertson, 19 South. 432, 109 Ala. 296; Insurance Co. v. Bullene, 51 Kan. 764, 774, 33 Pac. 467; Leonard v. M., K. & T. Ry. Co., 68 Mo. App. 48, 50; Bosworth v. Jacksonville Nat. Bank, 12 C. C. A. 331, 64 Fed. 615; Skobis v. Ferge, 78 N. W. 426, 429, 102 Wis. 588; Kiddoo Bros. v. Dalton, 73 Mo. App. 667.

But the settled rule of the national courts and the general and rational rule is that the assignee of a part of a credit or of a chose in action or of property in the custody of another may enforce his claim by a suit in equity, for the very reasons that he cannot do so, and hence has no adequate remedy, at law, and that he may make the assignor and all the assignees parties to the suit, so that the debtor will be subject to but a single action. Fourth Street Bank v. Yardley, 165 U. S. 634, 644, 17 Sup. Ct. 439, 41 L. Ed. 855; Trist v. Child, 21 Wall. (U. S.) 441, 447, 22 L. Ed. 623; Peugh v. Porter, 112 U. S. 737, 742, 5 Sup. Ct. 361, 28 L. Ed. 859; James v. Newton, 142 Mass. 366, 372, 378, 8 N. E. 122, 56 Am. Rep. 692; Richardson v. White, 167 Mass. 58, 60, 44 N. E. 1072; Warren v. First Nat. Bank, 38 N. E. 122, 125, 140 Ill. 9, 25 L. R. A. 746; Grain v. Aldrich, 38 Cal. 514, 521, 99 Am. Dec. 423; National Exchange Bank v. McLoon, 73 Me. 498, 40 Am. Rep. 388; Lanigan v. Bradley, etc., Co., 50 N. J. Eq. 201, 24 Atl. 505; Field v. Mayor, 2 Seld. (N. Y.) 179, 188, 57 Am. Dec. 176; Pomeroy, Eq. Jur. p. 2563, § 1280, and cases cited in the notes. And a party for whom real or personal property is held in trust may convey a part of his interest therein without the consent of his trustee, and his assignee may maintain a suit in equity to enforce the execution of the trust. The assignee of a part of the interest of a cestui que trust has the same right as had his assignor to compel the performance of the trust. Palmer v. Stevens, 15 Gray (Mass.) 243; Buck v. Swazey, 35 Me. 41, 56 Am. Dec. 681; Pomeroy, Eq. Jur. (2d Ed.) § 989; Honnett v. Williams, 66 Ark. 148, 152, 49 S. W. 495; Whipple v. Fairchild, 139 Mass. 262, 265, 30 N. E. 89; Clark v. Crego, 47 Barb. (N. Y.) 599, 614; Putnam v. Story, 132 Mass. 205, 210.

But counsel insist that there was a defect of parties to this suit, because Byrns, the assignor, and the United States Mines Company and Bradburn, assignees of parts of Byrns' interest, are not parties to the suit, and, while the complainants state in their bill that they bring this suit on behalf of themselves and all others similarly situated, they do not aver that the others are too numerous to be joined, that their joinder would oust the jurisdiction of the court, nor do they set forth any other fact which might excuse their failure to bring the other assignees of parts of the claim of Byrns into this suit. The rule in the national courts regarding the necessity of bringing in parties to suits in equity, and the reasons for it, have been thus stated by this court:

Digitized by Google

"The general rule in chancery is that all those whose presence is necessary to a determination of the entire controversy must be, and all those who have no interest in the litigation between the immediate parties, but who have an interest in the subject-matter of the litigation which may be conveniently settled therein, may be, made parties to it. The former are termed the necessary, and the latter the proper, parties to the suit. The limitation of the jurisdiction of the federal courts by the citizenship of the parties, and the inability of those courts to bring in parties beyond their jurisdiction by publication, has resulted in a modification of this rule, and a practical division of the possible parties to suits in equity in those courts into indispensable parties and proper parties. An indispensable party is one who has such an interest in the subject-matter of the controversy that a final decree between the parties before the court cannot be made without affecting his interests, or leaving the controversy in such a situation that its final determination may be inconsistent with equity and good conscience. Every other party who has any interest in the controversy or the subject-matter which is separable from the interest of the parties before the court, so that it will not be immediately affected by a decree which does complete justice between them, is a proper party. Every indispensable party must be brought into court, or the suit will be dismissed. The complainant may join every proper party who would have been a necessary party under the old chancery rule, unless his joinder would oust the jurisdiction of the court as to the parties before it, or unless he is incapable of being made a party by reason of his absence from the jurisdiction of the court or otherwise. If, however, such a party is incapable of being made a party, or if his joinder would oust the jurisdiction of the court as to the parties before it, the suit may proceed without him, and the decree will not affect his interests. Rev. St. §§ 737, 738 [U. S. Comp. St. 1901, p. 587]; Equity Rule 47; Chadbourne's Ex'rs v. Coe, 2 C. C. A. 327, 51 Fed. 479, 480, 481; Shields v. Barrow, 17 How. (U. S.) 130, 139, 15 L. Ed. 158; Ribon v. Railroad Co., 16 Wall. (U. S.) 446, 450, 21 L. E. 367; Coiron v. Millaudon, 19 How. (U. S.) 113, 15 L. Ed. 575; Williams v. Bankhead, 19 Wall. (U. S.) 563, 22 L. Ed. 184; Kendig v. Dean, 97 U. S. 423, 24 L. Ed. 1061; Alexander v. Horner, 1 McCrary (U. S.) 634, Fed. Cas. No. 169; Cole Silver Min. Co. v. Virginia & Gold Hill Water Co., 1 Sawy. (U. S.) 685, Fed. Cas. No. 2,990." Sioux City Terminal R. & W. Co. v. Trust Co. of N. A., 27 C. C. A. 73, 75, 82 Fed. 124, 126; Wood v. Dummer, 3 Mason (U. S.) 308, 30 Fed. Cas. 435 (No. 17,944).

Byrns is not a necessary party to this suit because he has assigned all his interest. Perry on Trusts, § 882; Goodson v. Ellisson, 3 Russ. 583. But the United States Mines Company and Bradburn are necessary parties under the old chancery rule, because their presence is requisite to a determination of the entire controversy which has arisen under the right of Byrns. They are not, however, indispensable parties under the rule of the national courts, because a final decree can be rendered herein between the complainants and the defendants, which will completely adjudicate their rights, without binding or injuriously affecting the rights of the Mines Company and Bradburn. The Mines Company and Bradburn should therefore be brought into this suit and made parties to the bill, unless the complainants make it appear by proper averments therein either that they are absent from the jurisdiction of the court, or that their joinder would oust its jurisdiction as to the parties before it, or that the parties similarly situated with the complainants are so far unknown or so numerous that the complainants may maintain this suit under the established rules of practice in equity on behalf of themselves and all others similarly situated, without bringing the latter into the suit by name. Story's Eq. Pl. §§ 96, 113, 114a, 120, 121, 134; Hoe v. Wilson, 76 U. S. 501, 19 L. Ed. 762.

But this defect of parties will not sustain a decree of dismissal of a

Digitized by Google

bill on the merits, or upon the ground that there is no equity in it. In the case of such a defect the bill must be retained, opportunity must be given to the complainants to amend it and to bring in the necessary absent parties, or to show why it is impracticable to join them, and only upon their failure so to do after reasonable opportunity may the bill be dismissed on this account. Hoe v. Wilson, 76 U. S. 501, 504, 19 L. Ed. 762; Wood v. Dummer, 30 Fed. Cas. 438 (No. 17,944); 2 Perry on Trusts (4th Ed.) § 881.

Our conclusions are that this bill shows that this is a suit to enforce specific performance of Maitland's agreement with Byrns in 1902, and to compel the execution of the trust which was created by that agreement and by its performance on the part of Byrns; that it is not conditioned by the rules of practice which govern stockholders' suits; that the complainants, the assignors of definite parts of the rights of Byrns, are qualified to maintain the suit; that in equity they are the owners of the stock of the Penobscot Company, which appears from the bill to have been assigned to them under Byrns; and that they have a good cause of action for the relief they seek, but that their bill shows a defect of parties. The decrees below, that there was no equity in the bill and that it be dismissed upon the merits, were therefore erroneous. They must be reversed, and the case must be remanded to the court below, with directions to permit the complainants within a reasonable time to amend their bill and to bring in other proper parties, or to show by their amendment why they should not pursue this course, and to take further proceedings not inconsistent with the views expressed in this opinion. It is so ordered.

(154 Fed. 617.)

MORRISON et al. v. BURNETTE et al.

(Circuit Court of Appeals, Eighth Circuit. July 10, 1907.)

No. 2,529.

1. APPEAL AND ERROR—ASSIGNMENT REQUISITE FOR ERRORS NOT JURISDICTIONAL—CROSS-ERRORS NOT ASSIGNABLE.

An appellate court will notice without objection or assignment the lack of jurisdiction of an inferior court.

But alleged errors in the exercise of its jurisdiction can be presented only by appeal or writ of error and a proper assignment of errors. Cross-errors are not judicable in a federal appellate court.

[Ed. Note.—For cases in point, see Cent. Dig. vol. 2, Appeal and Error, § 1166; vol. 8, Appeal and Error, §§ 2968, 2971.]

2. APPEAL—RECORD—BILL OF EXCEPTIONS—UNNECESSARY IN EQUITY.

A bill of exceptions has no function and is unnecessary in an equity proceeding in the absence of a trial of some issue by a jury, because the appeal brings the entire record, including the evidence, objections, and exceptions, to the appellate court.

[Ed. Note.—For cases in point, see Cent. Dig. vol. 8, Appeal and Error, § 2437.]

3. COURTS—APPEALS TO COURT OF APPEALS OF INDIAN TERRITORY TAKEN AS TO COURT OF APPEALS OF EIGHTH CIRCUIT.

Appeals to the Court of Appeals of the Indian Territory from orders, judgments, and decrees of the trial courts made in the exercise of their probate jurisdiction must be taken, and the practice therein is governed,

Digitized by Google

by the method of taking and the practice in appeals from the Circuit Courts to the Circuit Court of Appeals of the Eighth Circuit (Act March 3, 1905, c. 1479, § 12, 33 Stat. 1081 [U. S. Comp. St. Supp. 1905, p. 150]), and not by sections 1385, 1386, Mansf. Dig. Ark.

4. INDIANS—MINORS' ALLOTMENTS—SECRETARY OF INTERIOR HAS NO JURISDICTION OF LEASES OF.

Leases of allotments of Indian minors in the Indian Territory, confirmed and approved by the trial courts of that territory since April 26, 1906, are not subject to the approval or disapproval of the Secretary of the Interior, but the orders of the courts confirming and approving them are final.

5. APPEAL AND ERROR—FINAL DECISION—ORDER AVOIDING CONFIRMATION OF SALE OF LEASE IS.

A decision which completely determines the rights of parties in the pending proceeding, who are not jointly liable with others, is a final decision, reviewable by appeal or writ of error under the acts of Congress.

An order which avoids a confirmation of a sale and an approval of a lease of an allotment of an Indian minor is a final decision, because it completely determines the right of the purchaser thereunder.

[Ed. Note.—For cases in point, see Cent. Dig. vol. 2, Appeal and Error, § 381.]

6. JUDICIAL SALES—AVOIDANCE—EFFECT OF RULE THAT COURTS HAVE POWER OVER ORDERS AND DECREES DURING TERM.

The general rule that the courts have power over their judgments, decrees, and orders during the term at which they are rendered does not give them jurisdiction to avoid confirmed judicial sales without cause at the term at which they are confirmed, because the rights of purchasers vest thereunder upon confirmation.

The only effect of this rule on such sales is to enable the courts to consider alleged causes for avoiding them during the term on motions or orders to show cause upon due notice, without the filing of formal bills for that purpose.

[Ed. Note.—For cases in point, see Cent. Dig. vol. 31, Judicial Sales, §§ 72, 80.]

7. SAME—BEFORE CONFIRMATION OPENING FOR FURTHER BIDS ALLOWABLE FOR GREAT INADEQUACY OF PRICE AND SLIGHT UNFAIRNESS.

A successful bidder under an order or decree of court at a sale which is subject to confirmation by the court is a purchaser from the announcement of the sale to him by the officer, and may thereafter be compelled to complete his purchase.

Before confirmation a sale will not be set aside for mere inadequacy of price, unless it is very great; yet, if the inadequacy be great, slight circumstances of unfairness in the conduct of the party benefited will be sufficient to open it for farther bids.

[Ed. Note.—For cases in point, see Cent. Dig. vol. 31, Judicial Sales, § 55.]

8. SAME—VOIDABLE AFTER CONFIRMATION FOR FRAUD OR MISTAKE ONLY—IT MAY NOT BE OPENED FOR BETTER BIDS.

After confirmation of a judicial sale the rights of the purchaser have vested. Neither inadequacy of price, nor offers of higher prices, nor anything but fraud, mistake, accident, or some other cause for which equity would avoid a like sale between private parties, will warrant a court in avoiding the sale or in opening it for other bids.

[Ed. Note.—For cases in point, see Cent. Dig. vol. 31, Judicial Sales, §§ 66, 77.]

(Syllabus by the Court.)

Appeal from the United States Court of Appeals in the Indian Territory.

Digitized by Google

Pursuant to an order of the United States Court in the Western District of Indian Territory, which has the jurisdiction of a probate court, a lease of 160 acres of mineral land which had been allotted to Edith Durant, a minor Indian, was advertised for sale on sealed bids by Monday Durant, her guardian, and on the day of sale, March 5, 1906, the highest bonus bid for it was $3,490, and this bid was made by Robert W. Morrison, Charles W. S. Cobb, John E. McKinney, William J. Breene, and Frank M. Breene, who are now the appellants in this case, and will hereafter be so styled. The Laurel Oil & Gas Company, a corporation, one of the appellees, bid at the same time at this sale $2,850 for this lease. On March 7, 1906, the appellants deposited the $3,490 with the court, and on March 9, 1906, the guardian executed the lease of the land to the appellants, and they applied to the court for the confirmation of the sale and the approval of the lease. After notice to all parties in interest, and a hearing, the court on June 11, 1906, "ordered, adjudged, and decreed that the lease executed by Monday Durant, guardian of Edith Durant, minor, on the 9th day of March, 1906, [to the appellants] be, and the same is hereby, in all things approved, ratified, and confirmed." On the next day the Laurel Company, the unsuccessful bidder at the former sale, made a motion for leave to bid again for the lease of this land, and offered to bid a bonus of $8,000. Thereupon the court set aside the order of June 11, 1906, for the sole reason that a higher bonus could be obtained, and on June 14, 1906, it sold a lease of 80 acres of this land on the same terms as the former to the Galbraith Oil & Gas Company for a bonus of $16,800 and a lease of the other 80 acres on the same terms to the Laurel Oil & Gas Company for $2,000. The leases to these parties were subsequently made by the guardian, and the court confirmed these sales and approved these leases. The appellants then sued out a writ of error from the Court of Appeals of the Indian Territory to reverse the order which set aside the decree of confirmation of the sale and of approval of the lease to them, and they also appealed from that order. The Court of Appeals of the Indian Territory consolidated the two cases, heard them as an appeal in equity, and affirmed the order below, because the court was evenly divided in opinion. The appellants have brought the latter judgment here by writ of error, and also by appeal.

Since the case came to this court the controversy over the 80 acres leased to the Galbraith Oil & Gas Company has been settled, and the only dispute remaining relates to the 80 acres leased to the Laurel Oil & Gas Company under the second lease.

W. J. Breene and J. J. Shea (W. B. Homer and Edmond C. Breene, on the brief), for appellants.

George A. Murphey (William T. Hutchings and William P. Z. German, on the brief), for appellees.

Before SANBORN and HOOK, Circuit Judges, and PHILIPS, District Judge.

SANBORN, Circuit Judge, after stating the case as above, delivered the opinion of the court.

As this is a proceeding in equity, the writ of error must be dismissed, and the case must be considered and decided upon the appeal, and it is so ordered.

The real question in the case is: May a court of equity, during the term at which the confirmation is made, lawfully avoid an executed judicial sale which it has confirmed, on the sole ground that a larger price may be obtained by a second sale?

Before entering upon the consideration of this question some preliminary objections must be considered. Counsel for the appellees insist that this issue is not within the jurisdiction of this court (1) because the writ of error issued by the Court of Appeals of the In-

Digitized by Google

dian Territory to the trial court was not allowed by any judge of the former court or by the trial judge; (2) because the petition for the writ of error and the assignment of errors thereon show no filing marks; and (3) because the assignment of the errors of the trial court was not filed until 36 days after the appeal was taken. And they cite U. S. v. Goodrich, 54 Fed. 21, 4 C. C. A. 160, and Flahrity v. Union Pac. Ry. Co., 56 Fed. 908, 6 C. C. A. 167. But these objections do not assail the jurisdiction of the Court of Appeals of the Indian Territory, for this is a proceeding in equity reviewable by appeal, an appeal was taken, and that court had ample power to hear and decide the merits of the cases upon that appeal, either upon an assignment of errors filed out of time or without any assignment whatever. A hearing on an assignment filed too late may have been error, but it was not jurisdictional error. It related merely to the method of the exercise by the appellate court of its undoubted power, and not to its total want of jurisdiction, and hence it is reviewable in this court only upon an appeal and a proper assignment of errors. Rogers v. Penobscot Mining Co., 154 Fed. 606,[1] decided at this term. The appellees have taken no appeal, and they cannot invoke the jurisdiction of a federal appellate court to consider or decide questions of this nature by an assignment or by an argument of cross-errors. Guarantee Co. v. Phenix Ins. Co., 59 C. C. A. 376, 379, 124 Fed. 170, 173.

Another objection is that the record contains no bill of exceptions. But no bill of exceptions is requisite in a proceeding in equity, because the appeal brings the entire record to the appellate court. Dodge v. Norlin, 66 C. C. A. 425, 431, 133 Fed. 363, 369; Teller v. U. S., 49 C. C. A. 263, 111 Fed. 119.

Counsel argue that the appeal in this case was not taken in accordance with the method prescribed by Mansfield's Digest of the Laws of Arkansas for appeals from probate courts to circuit courts (sections 1385, 1386) and that on such an appeal a bill of exceptions is essential. But Congress has provided that appeals from the United States Courts in the Indian Territory to the United States Court of Appeals in the Indian Territory should be taken in the same manner as is provided in cases taken by appeal from the Circuit Courts of the United States to the Circuit Court of Appeals of the United States for the Eighth Circuit. Act March 3, 1905, c. 1479, § 12, 33 Stat. 1081 [U. S. Comp. St. Supp. 1905, p. 150]. This appeal was so taken. No bill of exceptions is required to bring the entire record before this court in a suit in equity on an appeal from a Circuit Court, and hence none was essential to do so in the Court of Appeals of the Indian Territory. Sections 1385 and 1386 of Mansfield's Digest are not in force in the Indian Territory, and the act of Congress must prevail.

Another contention is that the merits of this case are not reviewable here, because the sale and the lease to the appellants were subject to the approval of the Secretary of the Interior, and hence the order which avoided their confirmation was not a final order. The United States Courts in the Indian Territory have the powers of courts of probate. Act May 2, 1890, c. 182, § 31, 26 Stat. 94; Act April 28, 1904, c. 1824, § 2, 33 Stat. 573. The act of Congress which

[1] 83 C. C. A. 380.

Digitized by Google

approved and ratified the supplemental agreement between the commissioners of the Creek Nation of Indians and the United States, which was approved June 30, 1902, provided that leases by Creek citizens for mineral purposes might be made with the approval of the Secretary of the Interior, but not otherwise. Act June 30, 1902, c. 1323, § 17, 32 Stat. 504. By the act to provide for additional United States judges in the Indian Territory, approved July 28, 1904, Congress enacted that "full and complete jurisdiction is hereby conferred upon the district courts in said Territory (the Indian Territory) in the settlement of all estates of decedents, the guardianships of minors and incompetents, whether Indians, freedmen, or otherwise." 33 Stat. 573, c. 1824, § 2. By the act of March 3, 1905, making appropriations for the expenses of the Indian Department and for fulfilling treaty stipulations with the Indian tribes, the Secretary of the Interior and the Attorney General were empowered to investigate leases of allotted lands in the Indian Territory and to bring suits to cancel them for fraud. But the act expressly provides that "no lease made by any administrator, executor, guardian or curator which has been investigated by and has received the approval of the United States court having jurisdiction of the proceeding shall be subject to suit or proceeding by the Secretary of the Interior or Attorney General," and that "no lease made by any administrator, executor, guardian or curator shall be valid or enforceable without the approval of the court having jurisdiction of the proceeding." Act March 3, 1905, c. 1479, 33 Stat. 1060. On April 15, 1905, the Secretary of the Interior adopted regulation No. 15, which reads thus:

"In cases of transfers, leases, and sales to which minors are parties grantor, the transfer, lease or sale must be made by a guardian, and the lease, deed, or instrument of conveyance must be accompanied by certified copies of the orders of the proper court appointing the guardian and authorizing him to make such transfer, lease, or sale, and it must be fully understood that the department reserves the right to use any means at its disposal for the purpose of ascertaining whether the consideration given is the fair value of the land, and whether the proposed lease or sale is for the best interests of the Indian."

By the act to provide for the final disposition of the affairs of the five civilized tribes in the Indian Territory approved April 26, 1906 (Act April 26, 1906, c. 1876, 34 Stat. 137, 145, 148) commonly called the "Curtis Act," the Congress enacted:

"Sec. 20. That after the approval of this act all leases and rental contracts, except leases and rental contracts for not exceeding one year for agricultural purposes for lands other than homesteads, of full-blood allottees of the Choctaw, Chickasaw, Cherokee, Creek and Seminole tribes, shall be in writing and subject to approval by the Secretary of the Interior and shall be absolutely void and of no effect without such approval: Provided, that allotments of minors and incompetents may be rented or leased under order of the proper court: Provided further, that all leases entered into for a period of more than one year shall be recorded in conformity to the law applicable to recording instruments now in force in said Indian Territory."

"Sec. 29. That all acts and parts of acts inconsistent with the provisions of this act be, and the same are hereby, repealed."

The regulation of the Interior Department is effective so far as it is sustained by the acts of Congress, and is ineffectual so far as it is in conflict with them. In the light of the legislation to which reference

Digitized by Google

has now been made there are two conclusive answers to the argument that the order avoiding the sale and the lease to the appellants was not a final order. In the first place the acts of April 28, 1904, and April 26, 1906, conferred "full and complete jurisdiction" of the guardianship of minors, whether Indians, freedmen, or otherwise, and of the rental or lease of their allotments, upon the trial courts of the Indian Territory, and the later act repealed all acts and parts of acts inconsistent therewith. The provision of the act of June 30, 1902, that leases for mineral purposes might not be made without the approval of the Secretary of the Interior, is inconsistent with the grants of these later acts. There can be no full and complete jurisdiction of the guardianship of minor Indians and of the leasing of their allotments in a court whose judgments are reviewable and reversible by an officer of another department of the government. Leases of allotments of Indian minors approved by the trial courts of the Indian Territory after April 26, 1906, were therefore not subject to approval or disapproval by the Secretary of the Interior. Those courts had full and complete jurisdiction to sell the leases and to finally approve and confirm the sales and the leases. The lease to the appellants is in this category. It was approved and the sale of it was confirmed on June 11, 1906, and the order which approved it was therefore a final order.

In the second place, even if the lease to the appellants had been subject to the approval of the Secretary of the Interior, and if the order of the court confirming the sale and approving the lease had been a mere recommendation of the court to him, yet that order was an indispensable prerequisite to the existence of a valid lease of the minor's land. The Secretary had no power to make or approve such a lease without the approving order of the court. Therefore the order which avoided the sale and the lease to the appellants deprived them of all right, privilege, and opportunity to secure or enforce the lease which the guardian had made to them. A decision which completely determines the rights of parties in the pending proceeding, who are not jointly liable with others, is a final decision, reviewable by appeal or by writ of error under the acts of Congress. Standley v. Roberts, 8 C. C. A. 305, 308, 59 Fed. 836, 839, and cases there cited. The appellees cannot escape the main issue in this case, and we turn to its consideration.

Counsel for the appellees indulge in extended argument and the citation of many authorities in support of the position that a court has jurisdiction of its judgments, decrees, and orders, and may summarily modify, revoke, or avoid them, without cause, during the term at which they are made, and from this premise they argue that the avoidance of the sale and lease to the appellants was regular and right. There is an established general rule that a court has power over its judgments, orders, and decrees during the continuance of the term at which they are first made. But it is a rule of practice, rather than of right. It is a rule that during the term judgments, orders, and decrees may be modified and avoided summarily without the necessity of filing a formal bill and commencing a suit for that purpose. Moreover, the power of a court under this rule to modify or avoid without cause is limited to the modification or avoidance of judgments, orders, and decrees which de-

Digitized by Google

termine issues between parties litigant before it and under which no rights have vested. Ex parte Lange, 18 Wall. 163, 21 L. Ed. 872; Bassett v. U. S., 9 Wall. 38, 19 L. Ed. 548; Doss v. Tyack, 14 How. 297, 312, 313, 14 L. Ed. 428; Goddard v. Ordway, 101 U. S. 745, 751, 752, 25 L. Ed. 1040; Henderson v. Carbondale Coal & Coke Co., 140 U. S. 25, 40, 11 Sup. Ct. 691, 35 L. Ed. 332; Bronson v. Schulten, 104 U. S. 410, 415, 26 L. Ed. 997; Ætna Life Ins. Co. v. Board of County Com'rs, 79 Fed. 575, 25 C. C. A. 94; Underwood v. Sledge, 27 Ark. 295, 297; Bradley v. Slater, 78 N. W. 1069, 58 Neb. 554. It does not empower a court to reverse or avoid without cause a judicial sale during the term at which it has been confirmed, because in such a case the character of vendor has been added to that of judicial tribunal, and the rights of the purchaser have vested by virtue of the confirmation of the sale. Pewabic Mining Co. v. Mason, 145 U. S. 349, 367, 12 Sup. Ct. 887, 36 L. Ed. 732. When a court becomes a vendor of an executed sale, it is no less bound by the rules of law, of equity, and of morals than is a private seller, and it may avoid its sale on the same grounds, and on no others. Hence the only effect of the rule that a court has power over its orders and decrees during the term, in the case of an application to avoid a judicial sale during the term at which it is confirmed, is to relieve the applicant from the necessity of filing a bill in equity for the purpose, and to permit him to apply for the relief he seeks upon due notice to the purchaser by motion or order to show cause.

Upon what grounds, then, may such a sale be lawfully set aside? The old rule in the English chancery was that a bidder at a sale under an order or decree of a court, which was subject to the subsequent report to and confirmation by the judicial tribunal, was not a purchaser, but was one who merely made a tender or offer to purchase, and that he could not be compelled to complete his bargain until the confirmation of the sale. This rule, however, has never prevailed in this country, and it has been abolished by act of Parliament in England. Acts 1867 (30 & 31 Vict.) c. 48, § 7. On the other hand, the rule is without exception in the national courts, and it has been very generally adopted in the state courts, that the bidder at a sale by a master or receiver, under an order or decree which contemplates a subsequent report and confirmation of the sale, becomes a purchaser when the officer announces the sale to him. Thereafter he is liable for and may be compelled to pay the purchase price he bids. Thereafter he may be made to suffer the loss of the destruction or depreciation, and may be permitted to reap the profit of the appreciation, of the property. Nevertheless he buys subject to the confirmation or avoidance of the sale by the court, and as he is aware of this fact, and the court is selling the property of others, and is acting in the dual capacity of trustee for the owners and of a judicial tribunal, it is undoubtedly its duty until confirmation to exercise a wise judicial discretion to secure for the owners the largest price consistent with a just regard for the rights of the bidder. Hence, if a material advance in price is offered and secured by a deposit or by a bond before the sale is confirmed, the sale has sometimes been opened, further bids have been received, and a sale to the highest bidder has been confirmed.

Digitized by Google

In Blanks v. Farmers' Loan & Trust Co., 59 C. C. A. 59, 122 Fed. 849, we find that mortgaged lands were offered for sale by a master under a decree of the court, and a bid was made and reported of $115,900. Before the confirmation of the sale, however, an advance of $10,000 was offered and secured, whereupon the court opened the sale, received 24 other bids, and finally confirmed the sale to the highest bidder for $140,000. In North Carolina and some other states it is a settled rule of practice to open the sale and receive new bids upon a guaranty of an advance of 10 per cent. Attorney General v. Roanoke Navigation Co., 86 N. C. 408, 413. But the practice of opening sales upon the offer of a secured bid of 10 per cent. advance has never prevailed in the national courts. The rule there is that mere inadequacy of price, unless very great, is insufficient to warrant the opening of the sale, but that, if the inadequacy be great, slight circumstances of unfairness on the part of the party benefited will be sufficient to prevent its confirmation and to warrant the opening of the sale for farther bids. Ballentyne v. Smith, Trustee, 27 Sup. Ct. 527, 528, 205 U. S. 285, 51 L. Ed. 803; Files v. Brown, 59 C. C. A. 403, 407, 124 Fed. 133, 137.

But there is a marked and radical distinction between the situations, the rights of the parties, and the established practice before and after the confirmation of the sale. The purchaser bids with full notice that the sale to him is subject to confirmation by the court and that there is a power granted and a duty imposed upon the judicial tribunal when it comes to decide whether or not the sale shall be confirmed to so exercise its judicial power as to secure for the owners of the property the largest practicable returns. He is aware that his rights as a purchaser are subject to the rational exercise of this discretion. But after the sale is confirmed that discretion has been exercised. The power to sell and the power to determine the price at which the sale shall be made has been exhausted. From thenceforth the court and the successful bidder occupy the relation of vendor and purchaser in an executed sale, and nothing is sufficient to avoid it which would not set aside a sale of like character between private parties. Hence the rule is settled, and it seems to be universally approved, that after confirmation of a judicial sale neither inadequacy of price, nor offers of better prices, nor anything but fraud, accident, mistake, or some other cause for which equity would avoid a like sale between private parties, will warrant a court in avoiding the confirmation of the sale or in opening the latter and receiving subsequent bids. Files v. Brown, 59 C. C. A. 403, 407, 408, 124 Fed. 133, 137, 138; Berlin v. Melhorn, 75 Va. 639, 641; Pewabic Mining Co. v. Mason, 145 U. S. 349, 367, 12 Sup. Ct. 887, 36 L. Ed. 732; Thomson v. Ritchie, 30 Atl. 708, 710, 80 Md. 247; Ins. Co. v. Cottrell, 9 S. E. 132, 133, 85 Va. 857, 17 Am. St. Rep. 108; Fidelity Ins. & Safe-Deposit Co. v. Roanoke St. Ry. Co. (C. C.) 98 Fed. 475, 476; Trull v. Rice, 92 N. C. 572, 574; Pritchard v. Askew, 80 N. C. 86; Bank v. Jarvis, 28 W. Va. 805; In re Third National Bank (D. C.) 9 Biss. (U. S.) 535, 4 Fed. 775; Collier v. Whipple, 13 Wend. (N. Y.) 224, 226; Watson v. Birch, 2 Ves. Jr. 51, 54; Williamson v. Dale, 3 Johns. Ch. (N. Y.) 290, 291; Ware v. Watson, 7 De Gex, M. & G. 739, 741; Condon v.

Digitized by Google

Maynard, 18 Atl. 957, 958, 71 Md. 601; Smith v. Black, 115 U. S. 308, 317, 6 Sup. Ct. 50, 29 L. Ed. 398; Barling v. Peters, 25 N. E. 765, 768, 134 Ill. 606; Graffam v. Burgess, 117 U. S. 180, 191, 192, 6 Sup. Ct. 686, 29 L. Ed. 839; Evans v. Maury, 112 Pa. 300, 312, 3 Atl. 850.

This rule is so firmly established that it is no longer debatable, and the cogent and all-sufficient reason for it is that judicial sales would become farces, and rational men would shun them and refuse to bid, if after the confirmation unsuccessful bidders or dissatisfied litigants could avoid them and secure new sales by offers of higher prices, when they thought the purchase a fortunate one, and thus secure the profits in that event, and leave the buyer to suffer the losses if the property depreciated in value or the purchase was unwise. No doubt remains regarding the proper decision in this case. The sale to the appellants was made on notice. The appellee, the Laurel Oil & Gas Company, made an unsuccessful bid at that sale. The lease to the appellants was executed, and they paid the amount of their bid to the court or its representative, more than three months before the sale was confirmed. The sale was confirmed, after notice, over objections, and after a full hearing. There was no fraud, no mistake, no surprise, no accident, no equitable ground for setting it aside. There was not even evidence that the purchase price was inadequate at the time of the sale. There was nothing but the mere fact that an unsuccessful bidder in March, who failed to offer more until after the sale was confirmed in June, suddenly became anxious to pay more than $5,000 above the price it had offered in March. The natural inference is that this property, which is of a speculative nature, had appreciated in value between the day of the sale and the day when this offer was made. If so, the purchaser who made the highest bid before the confirmation and paid the representative of the court the amount of it, and not the lower bidder, who paid nothing, was, after the confirmation, entitled upon every equitable principle to the benefit of the appreciation.

The order of the United States Court for the Western District of the Indian Territory, which set aside and avoided the decree of that court confirming the sale and approving the lease to the appellants, and the decree of the Court of Appeals of the Indian Territory, which affirmed it, are hereby reversed, and this case is remanded to the trial court, with directions to affirm and enforce its order and decree which confirmed the sale and approved the lease to the appellants, and to take any farther proceedings necessary to that end.

HOOK, Circuit Judge, concurs in the result.

Digitized by Google

(154 Fed. 626.)

CHICAGO, M. & ST. P. RY. CO. v. HEIL.

(Circuit Court of Appeals, Eighth Circuit. May 2, 1907.)

No. 2,495.

1. DAMAGES—MASTER AND SERVANT—ACTION FOR PERSONAL INJURY—EVIDENCE OF CONDITION OF INJURED MEMBER, AND CAUSE THEREOF ADMISSIBLE.

In an action for personal injury, evidence of the condition of the injured member up to the time of the trial, and evidence to what extent that condition was caused by the wrong of the defendant, and to what extent it was caused by the malpractice of the surgeon who treated it, is admissible, because the defendant is liable for the former and free from liability for the latter.

[Ed. Note.—For cases in point, see Cent. Dig. vol. 15, Damages, § 183.]

2. MASTER AND SERVANT—NEGLIGENCE—CONTRIBUTORY NEGLIGENCE—SUFFICIENCY OF EVIDENCE—FACTS—CONCLUSION.

An engine drawing 31 loaded cars stopped at a station to permit the unloading of freight from one of them, and the fireman, with the knowledge of the engineer, stepped out for the purpose of crawling under the engine and raking the ashes out of the ashpan. It was dangerous to the fireman to move the engine while he was under it. He crawled under it, and, as he was about to commence to rake out the ashes, the engine moved backward, he placed his hands upon the rail and jumped out, but before he could remove them one of the trucks passed over and crushed his left hand. The engine moved from two to four feet. There was evidence that this backward movement was caused by the recoil of the rear cars of the train after it stopped and that the engineer could not have prevented it. There was also evidence sufficient to sustain a finding by the jury that the backward movement was caused by the engineer by giving the engine steam while the lever was in the backward motion.

Held, the case was properly submitted to the jury, because, if the engineer caused the backward movement by giving the engine steam while he knew the fireman had gone to crawl under it, he was guilty of negligence, and the evidence was not conclusive that the fireman was guilty of contributory negligence.

[Ed. Note.—For cases in point, see Cent. Dig. vol. 34, Master and Servant, §§ 1051–1067, 1089–1132.]

3. COURTS—FEDERAL COURTS—PROCEDURE—APPEAL—DECISIONS REVIEWABLE—AMOUNT OF DAMAGES.

The question whether or not a jury has been induced by passion or prejudice to assess an excessive amount of damages is not reviewable in a federal appellate court.

4. WRIT OF ERROR—REVIEW—DISCRETIONARY MATTERS—NEW TRIAL—ORDER GRANTING OR REFUSING DISCRETIONARY AND NOT REVIEWABLE.

Where a trial court has jurisdiction to grant or refuse a new trial, its order granting or refusing it is discretionary, and it is not reviewable in a national appellate court.

[Ed. Note.—For cases in point, see Cent. Dig. vol. 3, Appeal and Error, §§ 3860–3876.]

(Syllabus by the Court.)

In Error to the Circuit Court of the United States for the District of Minnesota.

M. B. Webber, for plaintiff in error.

L. L. Brown (W. D. Abbott and S. H. Somsen, on the brief), for defendant in error.

Before SANBORN, HOOK, and ADAMS, Circuit Judges.

Digitized by Google

SANBORN, Circuit Judge. This was an action by a fireman against his employer, the railway company, for the negligence of his fellow servant, the engineer, whereby he lost one of his hands. It arose in a jurisdiction in which the fellow-servant doctrine has been abolished. At the trial a physician had testified that he had made an examination of the stump of the plaintiff's wrist at the preceding term of the court, and the railway company complains of the admission of the doctor's testimony, to the effect that he found two or three suppurating holes at the end of the stump as large as the head of a lead pencil; that the cause of that condition was that the skin had sloughed at the side of the original amputation; that in getting the stump the flap had been so short that it left the skin adhering to the bone and pulled so tight that the circulation was interfered with so that the stump was very unhealthy from tension; that, in order to make the arm able to support an artificial appliance, it would be necessary to amputate it farther back and to get a cover of good, healthy skin; and that, if it had been amputated in such a manner as to give an ample flap, it should have been healed completely within ten days and should have stayed healed. At the conclusion of the trial the court instructed the jury that it was not claimed that the defendant was responsible for any injury because the arm was improperly treated or because there was no sufficient flap left to cover the stump. In view of this charge, no error is perceived in the receipt of this testimony. Evidence of the actual result of the injury and hence of the condition of the arm up to the time of the trial of the action was certainly competent because the character and permanence of the injury were material. Evidence to show to what extent this condition was caused by the wrong of the defendant and to what extent it was the result of some independent cause, such as the malpractice of the surgeon who treated it, was undoubtedly relevant because the defendant was liable for the former and exempt from liability for the latter. For these reasons the specifications of error which relate to this evidence cannot be sustained.

The next alleged error is the refusal of the court to instruct the jury to return a verdict for the defendant, and this presents two questions: Was there evidence sufficient to sustain a finding that the injury was caused by the negligence of the engineer? And, did the evidence conclusively show that the fireman was guilty of contributory negligence? The train upon which these men were serving consisted of an engine and 31 cars. The air was applied to the seven cars next to the engine, so that the air brakes thereon would operate, but it was cut off from the remaining 24 cars. The train stopped at a station upon a substantially level track to permit a car to be unloaded, and the fireman informed the engineer that he would go forward and clean out the ashpan; but the latter requested him to wait until he pulled the train up again and made another stop, because the engine was then too near the station. In order to clean the ashpan, it was necessary for the fireman to get in under the engine on its left side between the forward driver and the rear truck and to rake the ashes out of the pan with a long-handled hoe. It was dangerous to him to move the engine while he was under it

Digitized by Google

for this purpose. When the car was unloaded, the engineer pulled the train forward the length of six or seven cars, shut off the steam, set the air, and stopped the train with the air brakes. The fireman stepped off the engine, took his hoe from the tender, walked forward, threw his hoe under the engine, crawled in between the forward driver and the truck, and was about to rake the ashes out of the pan with his hoe when he noticed the grinding of the wheels and the backward movement of the engine, and put his hands on the rail and jumped out backward. Before he could get his left hand off the rail, the truck struck and crushed it. The engine moved back from two to four feet and stopped. There is no dispute about the facts which have been recited. But, when we come to the cause of this backward movement of the engine, the disagreement of the witnesses is direct and substantial. When the lever of an engine is put in the center notch, the engine will not move if steam is given to it; but, when the lever is forward of this notch, or, as the witnesses expressed it, in the forward motion, and steam is given to the engine, it will move forward, and when the lever is back of this notch, or in the backward motion, and steam is given to the engine, it will move backward. The engineer testified that the backward movement of the engine was caused by the recoil of the 24 cars on the rear of the train the air brakes upon which were not in operation; that, when the train stopped, these cars ran up against the engine and the seven cars in front of them, and then rebounded, the slack ran out, and they pulled the engine back. He testified that he set the air brakes, stopped the train in the ordinary way, and set his lever at the center notch; that, when the engine started back, he could not hold it, and he gave it steam; that, if he had not applied the steam, the engine would have gone back the length of three or four cars; and that during all this time the air was set and the brakes were on. On the other hand, there was testimony that it was necessary that the links under the engine should be up in order to enable the fireman to clear the ashpan, that they were up when the lever was in the backward motion and down when it was in the forward motion, and that the recoil of 24 cars at a stop when the train was moving about four miles an hour, as was this train, would not move 7 cars with the brakes on them and the air set. Heil testified that, when he had crawled in under the engine, it had stopped, the brakes were on, and the links were up, and when he got out the brakes were off. There was substantial evidence here, sufficient to sustain a finding by the jury, that the recoil of the rear cars did not cause the backward movement of the engine; that the links were up and the lever in the backward motion when Heil went under the car; that the engineer gave the engine steam and thereby caused its backward movement. And, if these were the facts, his act was a negligent one because he knew that the fireman had gone to place himself beneath the engine to clear the ashpan; and, if these were the facts, the fireman was not conclusively guilty of contributory negligence, because he had a right to presume that the engineer would not move the engine when he knew that he had gone forward to work beneath it. The evidence is not so conclusive that the engineer was free from,

Digitized by Google

or that the fireman was guilty of, negligence which contributed to the latter's injury that it was the duty of the court below to instruct the jury to return a verdict for the railway company.

The amount of damages found by a jury under the influence of passion or prejudice (Lincoln v. Power, 151 U. S. 436, 14 Sup. Ct. 387, 38 L. Ed. 224; Homestake Min. Co. v. Fullerton, 16 C. C. A. 545, 553, 69 Fed. 923, 931), and an order granting or refusing to grant a new trial, which the court has the power to make, are not reviewable in a federal appellate court (City of Manning v. German Ins. Co., 46 C. C. A. 144, 146, 107 Fed. 52, 54; Southern Pacific Co. v. Maloney, 69 C. C. A. 83, 136 Fed. 171).

The judgment below must be affirmed; and it is so ordered.

(154 Fed. 629.)

RODGER BALLAST CAR CO. v. OMAHA, K. C. & E. R. CO. et al.

(Circuit Court of Appeals, Eighth Circuit. May 2, 1907.)

No. 2,492.

1. RAILROADS—FORECLOSURE OF RAILROAD MORTGAGE—PREFERRED CLAIM IN EQUITY.

A mortgagee of the property acquired and to be acquired and of the income of a quasi public corporation, such as a railroad company, takes a lien on the net income after the current expenses of operation in the ordinary course of business are paid, and impliedly agrees that the gross income shall be first applied to the payment of these expenses.

[Ed. Note.—For cases in point, see Cent. Dig. vol. 41, Railroads, §§ 581–585.]

2. RECEIVERS—PRIORITY OF RUNNING EXPENSES BEFORE RECEIVERSHIP.

A court of equity engaged in administering mortgaged railroad property under a receivership in a foreclosure suit may in its discretion prefer unpaid claims for current expenses incurred in the ordinary operation of the railroad within a limited time, usually six months, before the receivership, to the claims of bondholders secured by a prior mortgage, in the distribution of the income or of the proceeds of the corpus of the mortgaged property.

[Ed. Note.—For cases in point, see Cent. Dig. vol. 42, Receivers, §§ 301–306.]

3. SAME—PREFERENTIAL CLAIM—TEST.

The test of the equity which entitles a claim to a preference over the mortgage in foreclosure is whether the consideration of the claim was or was not a part of the current expenses of the ordinary operation of the corporation within the time limited.

[Ed. Note.—For cases in point, see Cent. Dig. vol. 42, Receivers, §§ 301–306.]

4. SAME—NECESSITY—CONSERVATION—INCREASE OF SECURITY INSUFFICIENT.

Neither the fact that the consideration of the claim conserved the property and increased the security of the mortgagee, nor the fact that it was necessary to keep the mortgagor a going concern or to continue its business or operation, will raise a preferential equity in its favor, if its consideration was not a part of the current expenses of the ordinary operation of the mortgagor.

[Ed. Note.—For cases in point, see Cent. Dig. vol. 42, Receivers, §§ 301–306.]

Digitized by Google

5. SAME—CLAIMS FOR PURCHASE PRICE OR RENTAL OF ROLLING STOCK NOT PREFERENTIAL.

Claims for the purchase price or for the rental of engines, freight and passenger cars are not entitled to preference in payment out of the income or out of the corpus of the mortgaged property over those of creditors secured by prior mortgages.

[Ed. Note.—For cases in point, see Cent. Dig. vol. 42, Receivers, §§ 301-306.]

6. SAME—CLAIM FOR PURCHASE PRICE OF BALLAST CARS NOT PREFERENTIAL.

A claim for $26,192.05, the purchase price of 32 ballast cars, bought by a mortgagor railroad company operating 168 miles of railroad within six months of the appointment of receivers, is not a current expense of the ordinary operation of such a railroad company, and is not entitled to preference in payment out of the income or the corpus of the mortgaged property in preference to those of bondholders secured by prior mortgages.

The broad language of the dictum in Fosdick v. Schall, 99 U. S. 235, 252, 25 L. Ed. 339, that "necessary operating and managing expenses, proper equipment, and useful improvements" are to be deducted from the current income before the net income out of which the mortgage is to be paid arises, has been disapproved and modified, and the class of claims entitled to equitable preference has been limited to those for the current expenses of ordinary operation within six months of the receivership, by the later decisions of the Supreme Court in Kneeland v. Trust Co., 136 U. S. 89, 98, 10 Sup. Ct. 950, 34 L. Ed. 379, Morgan's L. & T. R. & S. S. Co. v. Texas Cent. Ry Co., 137 U. S. 171, 196, 198, 11 Sup. Ct. 61, 34 L. Ed. 625, Thompson v. Railroad Co., 132 U. S. 68, 71, 73, 74, 10 Sup. Ct. 29, 33 L. Ed. 256, Thomas v. Car Co., 149 U. S. 95, 110, 13 Sup. Ct. 824, 37 L. Ed. 663, Southern Ry. Co. v. Carnegie Steel Co., 176 U. S. 257, 296, 20 Sup. Ct. 347, 44 L. Ed. 458, Lackawanna Iron & Coal Co. v. Farmers' Loan & Trust Co., 176 U. S. 298, 315, 20 Sup. Ct. 363, 44 L. Ed. 475, and Gregg v. Metropolitan Trust Co., 197 U. S. 183, 25 Sup. Ct. 415, 49 L. Ed. 717. See Illinois Trust & Sav. Bank v. Doud, 44 C. C. A. 389, 105 Fed. 123, 52 L. R. A. 481.

(Syllabus by the Court.)

Appeal from the Circuit Court of the United States for the Western District of Missouri.

A. S. Van Valkenburgh and J. E. McKeighan (Frank P. Blair, M. F. Watts, and J. P. McBaine, on the brief), for appellant.

Frank Hagerman (Edward C. Wright, Hugh C. Ward, and J. G. Trimble, on the brief), for appellees.

Before SANBORN, HOOK, and ADAMS, Circuit Judges.

SANBORN, Circuit Judge. The question which this appeal presents is whether or not the Rodger Ballast Car Company, a corporation, had a lien superior in equity to those of the bondholders secured by two prior mortgages upon the property of the Omaha, Kansas City & Eastern Railroad Company which were foreclosed in the court below. The question was presented by an intervening petition and was decided after the foreclosure sale. The record is voluminous, but in our view of the facts, all of which have been carefully considered, these alone are material to the determination of the case: The Eastern Railroad Company had a railroad about 34 miles in length and a lease of the railroad of the Quincy, Omaha & Kansas City Railroad Company, which was about 134 miles long, and it was operating both of these railroads. In 1896 and 1897 it had given two mortgages upon

Digitized by Google

its railroad, upon its lease, upon its after-acquired property, and upon its income, to secure the payment of bonds to the amount of $1,428,000. The operation of the Quincy Road was essential to the successful operation and business of the Eastern Company. In 1899 the railroads were in bad condition, more especially the Quincy Road. Miles of its roadbed had been but partially ballasted, the sides of this roadbed were washed, many of the cuts upon the road were badly filled, some of the ties were decayed and some of the bridges had become dangerous so that it was necessary to the safe operation of these railroads and to the continuance of the business of the Eastern Company that many miles of this roadbed should be reballasted and surfaced. The board of railway and warehouse commissioners of the state of Missouri in August, 1899, issued a peremptory order to the Eastern Company, under a possible penalty of the suspension of all traffic upon its roads, that this roadbed must be surfaced and the cuts ditched. Ballast cars were necessary to the performance of this work, and on September 11, 1899, the Eastern Company bought of the Rodger Company 32 ballast cars and one plow car for the sum of $26,192.05, which it never paid. On January 2, 1900, judgment creditors of the Eastern Company procured the appointment of receivers of the property of that company, including its lease of the Quincy Road, and these receivers took possession of the ballast cars, operated the railroads, expended $63,000 in ballasting or surfacing the Quincy Road, and paid out $101,483.52 for rentals, but they paid no part of the purchase price of these cars. On December 16, 1901, the trustees for the holders of the bonds secured by the mortgages first became parties to this proceeding, and they prayed for a foreclosure of the mortgages. A decree to that effect was rendered, and on March 18, 1902, the mortgaged property was sold thereunder. One of the conditions of the sale was that the purchaser should take the property subject to any indebtedness or liability of the Eastern Company which should finally be adjudged prior in lien or superior in equity to the liens of the two mortgages. The controversy here was between the intervening claimant and the purchaser of the property, and the court below held that the claim of the Rodger Company for the purchase price of the cars it sold to the Eastern Company was not prior in lien nor superior in equity to the liens of the bondholders secured by the prior mortgages, and it dismissed its petition. Fordyce v. Omaha, Kansas City & Eastern R. Co. (C. C.) 145 Fed. 544.

In Illinois Trust & Sav. Bank v. Doud, 44 C. C. A. 389, 414, 105 Fed. 123, 148, 52 L. R. A. 481, this court reviewed with some care the decisions of the Supreme Court prior to the year 1901 upon the right of the unsecured creditor of a quasi public corporation to a preference in the payment of his claim out of the income and out of the corpus of the mortgaged property over creditors secured by prior mortgages, and deduced from them these propositions:

"A mortgagee of the property, acquired and to be acquired, and of the income of a quasi public corporation, such as a railroad company, obtains a lien upon the net income of the company after the current expenses of operation incurred in the ordinary course of business are paid, and impliedly agrees that the gross income shall be first applied to the payment of these current expenses before the net income to which he is entitled arises.

Digitized by Google

"A court of equity engaged in administering mortgaged railroad property under a receivership in a foreclosure suit may prefer unpaid claims for current expenses of the ordinary operation of the railroad, incurred within a limited time before the receivership, to a prior mortgage lien, in the distribution of the income or of the proceeds of the mortgaged property.

"If such a mortgagor diverts the current income from the payment of current expenses to the payment of interest on the mortgage debt, or to the improvement of the mortgaged property, so that current expenses remain unpaid when a receiver is appointed, the court may, out of the income accruing during the receivership, restore to the unpaid claims for current expenses the amount so diverted. But, if there has been no diversion, there can be no restoration, and the amount of the restoration cannot exceed the amount of the diversion.

"The class of claims which may be awarded a preference in payment over the prior mortgage debt in equity is limited to claims for current expenses incurred in the ordinary course of the operation of the mortgaged property within a limited time before the appointment of a receiver. * * *

"If the consideration of a claim is not a part of the current expenses of the ordinary operation of the mortgaged property, but is a part of the expense of constructing a permanent addition or improvement to it, out of the ordinary course of its operation, neither the fact that it tended to conserve and improve the property and increase the security of the mortgagee, nor the fact that it was necessary to keep the mortgagor a going concern, nor the fact that the mortgagor pledged or mortgaged the current income to secure it, will give the claim a preferential equity over the lien of a prior mortgage."

An examination of the opinions of the Supreme Court upon this subject since the decision in the Doud Case was rendered discloses no modification of these propositions of law, save that the class of claims which may be preferred has been still farther restricted by the holding in Gregg v. Metropolitan Trust Co., 197 U. S. 183, 25 Sup. Ct. 415, 49 L. Ed. 717, that claims incurred within six months prior to the receivership for the purchase price of cross-ties essential to the replacement of ties decayed in the current operation of a railroad may not be preferred to the claims of bondholders secured by prior mortgages in payment out of the corpus of the mortgaged property in the absence of a diversion of income. It would be a useless task to again review and discuss the numerous opinions of the Supreme Court from which the controlling rules announced in the Doud Case were derived, and an application of them to the facts of this case must suffice.

For the purposes of this decision the concession is made that the purchase of the ballast cars was necessary to keep the Eastern Company a going concern and to continue its business and operation, and that their purchase conserved and improved the mortgaged property and increased the security of the bondholders secured by the mortgages. But neither the fact that the consideration of a claim preserved and improved the mortgaged property and increased the security of the mortgagees, nor the fact that it was indispensable to keep the mortgagor a going concern and to continue its operation and business, will give to the claim a preferential equity over the lien of creditors secured by a prior mortgage. Illinois Trust & Sav. Bank v. Doud, 44 C. C. A. 415, 105 Fed. 149, 52 L. R. A. 481; Atlantic Trust Co. v. Dana, 128 Fed. 209, 227, 62 C. C. A. 657, 675. There is another indispensable attribute of a preferential claim. It is that its consideration was a current expense of the operation of the mortgagor incurred in the ordinary course of its business within a limited time,

Digitized by Google

usually six months, anterior to the appointment of the receiver. Illinois Trust & Sav Bank v. Doud, 44 C. C. A. 407, 408, 409, 414, 415, 105 Fed. 141, 142, 143, 148, 149 (52 L. R. A. 481).

In Southern Ry. Co. v. Carnegie Steel Co., 176 U. S. 257, 259, 296, at page 296, 20 Sup. Ct. 347, at page 362 (44 L. Ed. 458), the Supreme Court said:

"Before, however, such a creditor [an unsecured creditor] is accorded a preference over mortgage creditors in the distribution of net earnings in the hands of a receiver of a railroad company, it should reasonably appear from all the circumstances, including the amount involved and the terms of payment, that the debt was one fairly to be regarded as part of the operating expenses of the railroad incurred in the ordinary course of business, and to be met out of current receipts."

In Lackawanna, etc., Co. v. Farmers' Loan, etc., Co., 176 U. S. 298, 303, 315, 20 Sup. Ct. 363, 44 L. Ed. 475, in which a preference was denied to a claim for the purchase price of a large amount of rails which were indispensable to the continuance of the business of the company and of the operation of its railroad and which conserved the property and increased the security of the mortgagees, that court used these words:

"This court has uniformly held that in the distribution of the current earnings of an insolvent railroad company, whose property is being administered by a receiver, mortgage creditors could not be postponed to unsecured creditors, unless the debts due the latter were of the class known as current debts arising in the ordinary course of business and properly chargeable upon current receipts. The decision in each case has been more or less controlled by its special facts. But we are of opinion that such expenditures as those incurred in the making of the contracts with the Lackawanna Company were not such as are made in the ordinary course of the operations of a railroad, and cannot be deemed current debts within the rule that a railroad mortgagee when accepting his security impliedly agrees that the current debts of a railroad company contracted in the ordinary course of its business, in order to keep it a going concern, shall be paid out of current receipts before he has any claim upon such income."

A current expense incurred in the ordinary course of business within six months prior to a receivership is a usual expense incurred in the customary course of the business of the company. The evidence in this case fails to convince that the purchase of these 33 cars for $26,192.05 by a railroad company operating 168 miles of railroad was the incurring of such an expense. There was no evidence that the company had ever bought such a lot of cars before, or that in the ordinary course of its business it was accustomed to purchase such a lot once in three months or in six months or in any specific number of months, as a part of the current expenses of its operation. On the other hand, the record demonstrates the facts that the expense of this purchase was not a current or a customary, but an unusual expense, that it was not incurred in the ordinary course of the business of the company, but on an extraordinary occasion to answer an unprecedented demand and to provide for an unparalleled situation. For this reason, the debt of the railroad company to the appellant for these cars lacks an indispensable element of a preferential claim, and there was no error in the dismissal of the petition.

There is another established rule upon this subject which argues

Digitized by Google

by analogy for this conclusion. It is that claims for the purchase price or for the rental of engines and cars are not entitled to preference in payment out of the income or out of the corpus of mortgaged property over the claims of creditors secured by prior mortgages. Illinois Trust & Sav. Bank v. Doud, 44 C. C. A. 413, 105 Fed. 147, 52 L. R. A. 481; Fosdick v. Schall, 99 U. S. 235, 255, 25 L. Ed. 339; Huidekoper v Locomotive Works, 99 U. S. 258, 260, 25 L. Ed. 344; Kneeland v. Trust Co., 136 U. S. 89, 98, 10 Sup. Ct. 950, 34 L. Ed. 379; Thomas v. Car Co., 149 U. S. 95, 110, 111, 112, 13 Sup. Ct. 824, 831, 37 L. Ed. 663, in which the Supreme Court made these pertinent remarks:

"The case of a corporation for the manufacture and sale of cars, dealing with a railroad company whose road is subject to a mortgage securing outstanding bonds, is very different from that of workmen and employés, or of those who furnish from day to day supplies necessary for the maintenance of the railroad. Such a company must be regarded as contracting upon the responsibility of the railroad company, and not in reliance upon the interposition of a court of equity."

While ballast cars to move earth along a railroad for the purpose of surfacing and maintaining the roadbed are provided to make it possible for a railroad company to earn its income, while engines, freight cars, and passenger cars are usually obtained for the purpose of directly earning it, the latter are as necessary for the continuance of the business and of the operation of the company, and they contribute as much to increase the security of the mortgagees as the former, and the reasons urged by counsel for the Rodger Company why the same rules should not apply to both have failed to convince.

The decree below must be affirmed; and it is so ordered.

(154 Fed. 634.)

PETERS et al. v. GEORGE.

(Circuit Court of Appeals, Third Circuit. May 13, 1907.)

No. 13.

1. MASTER AND SERVANT—LIABILITY OF MASTER FOR NEGLIGENCE OF SERVANT—FELLOW SERVANTS.

Under the modern rule of the federal courts the theory of vice principal as determining the liability of a master to a servant for the negligence of another employé has been largely discarded, and the distinction between negligence which is to be imputed to the master and that which is to be considered as merely and solely the negligence of a fellow servant turns rather on the character of the act than on the relation of the employés to each other.

[Ed. Note.—For cases in point, see Cent. Dig. vol. 34, Master and Servant, §§ 385, 422–448.]

2. SAME—SERVANT SET AT DANGEROUS WORK—DUTY OF MASTER TO WARN AND INSTRUCT.

The duty to warn and instruct an employé who is set to perform a dangerous work with which he is unacquainted is a primary and absolute duty of the master to the servant, and he cannot relieve himself of liability for its nonperformance by delegating or intrusting it to a subordinate or to a fellow servant of such workman. Nothing short of actual notice of the danger to the workman who is to encounter it, with such cau-

Digitized by Google

tionary explanation as may enable him to avoid it, will satisfy the requirement of the law, and the default of an intermediary, whether he be the highest officer in control or merely a fellow workman of the one exposed to the danger, is the default of the master.

[Ed. Note.—For cases in point, see Cent. Dig. vol. 34, Master and Servant, §§ 385, 418, 419.]

3. SAME—INJURY TO SERVANT—ACTION FOR DAMAGES.

Plaintiff was employed by defendant as a common laborer in an open slate quarry, working under a gang boss, chiefly about the hoisting engine, in loading boxes, etc. He was not an experienced quarryman, and had never had anything to do with blasting. Three blasts had been put in, and after all the men had gone up out of the quarry an attempt was made to explode them by electricity, which failed. Some of the men with the gang boss then went down, and the boss set plaintiff to dig the tamping out of one of the holes with a crowbar, and while so engaged the blast exploded and he was injured. Plaintiff had never done such work, and the evidence showed that it had never before been done in the quarry while he was employed there. He was given no warning of the danger, and no instruction except to pour water in the hole as he worked. There was expert testimony that the drilling out of unexploded charges was highly dangerous and in the proper conduct of the work should never be done, and also testimony that it was contrary to the orders of defendant's superintendent, but such orders were not shown to have been known by plaintiff. *Held*, that the negligence of the gang boss was imputable to defendant, and that the question of its liability for the injury was properly submitted to the jury.

[Ed. Note.—For cases in point, see Cent. Dig. vol. 34, Master and Servant, §§ 313–316.]

In Error to the Circuit Court of the United States for the Eastern District of Pennsylvania.

Owen J. Roberts, for plaintiffs in error.

James S. Rogers, for defendant in error.

Before DALLAS, GRAY and BUFFINGTON, Circuit Judges.

GRAY, Circuit Judge. The plaintiffs in error, hereinafter called the "defendants," were the owners of a slate quarry near the town of Slatington, in Pennsylvania, and the defendant in error, hereinafter called "the plaintiff," was employed by them as a laborer in said quarry. The plaintiff, a Syrian and a subject of the Sultan of Turkey, brought suit in the Circuit Court of the United States against the defendants for compensation for bodily injuries suffered by him while working in defendants' quarries, and which he alleges were due to the negligence of the defendants. At the trial, the case was submitted by the court below to the jury, reserving as a question of law, whether "there is any evidence to go to the jury in support of the plaintiff's claim." The verdict was for the plaintiff, for $8,000, and the defendants made a motion for judgment for the defendants on the point of law reserved, non obstante veredicto, which motion was denied, and to the judgment entered upon the verdict, this writ of error has been sued out.

The material facts of the case, as gathered from the testimony sent up in the record, are as follows: On October 5, 1904, the plaintiff was in the employ of the defendants, in their slate quarry above referred to. His work was that of a general laborer, including carrying water

Digitized by Google

for the engines, carrying powder for blasting, and sometimes aiding in the drilling of blast holes, and loading boxes with slate to be hoisted out of the quarry. He had worked in the quarry for about two years prior to the accident. The quarry, which was an open hole or pit, was about 200 feet long and from 150 to 225 feet deep, about 45 feet wide at the bottom and about 80 feet wide at the top. Wire ropes were stretched across the top of the quarry, upon which were slung boxes that were drawn out on the wires over the middle of the quarry, whence, by suitable tackle, they could be lowered into the quarry and were used for carrying men and materials up and down. The offices and mills for preparing the slate for market were on the surface. In these offices, were the superintendent, clerks and superior officers of the defendants. They were, therefore, quite separated from and out of touch with the men employed in the quarry, 150 or 200 feet below. These men, 16 or 18 in number, one of whom was the plaintiff, were employed in the actual blasting of the slate and the work incident thereto, such as running the engines, loading the boxes, etc. They were under the general charge of one David Blose, who had been a long time employed as a quarryman and who, according to his own testimony, did all kinds of general work, but had authority "to place the men where I wanted them, under the instructions of the superintendent," the superintendent giving directions as to how the quarry was to be operated and the mining conducted. Blose was evidently what, in much outdoor work of this kind, is termed a "gang boss." On the day in question, three holes, seven or eight feet deep and three or four inches in diameter, had been drilled perpendicularly in a bench of rock. These holes were several feet apart and had been loaded, two of them with black powder and the other with dynamite. They had been tamped with mud or clay, and wires had been put in place, connecting caps imbedded in the powder and dynamite with electric batteries upon the surface. The men down in the quarry were all hoisted out, as the custom was when blasts were about to be made, and the holes were then attempted to be set off by an electric spark. There were no explosions, however, and a second and third attempt having failed, the men, or some of them, were lowered down into the mine with Blose, the gang boss. According to the testimony of the plaintiff, Blose went up with a drill or crowbar and a bucket of water to one of the holes which had failed to explode, and was proceeding to take out the tamping and the charge. The plaintiff, coming near him with a bucket of water, which he was carrying to or from the engine room, was called by Blose and told to proceed with the operation which he, Blose, had begun, and was given a drill or crowbar and a bucket of water to use in the work. Blose then left the plaintiff digging out the unexploded hole. Within a few minutes after this, one Fritzinger, another employé, came up to where plaintiff was working and, asking what plaintiff was doing, proceeded to work at a hole alongside. Samuel Hanna, another employé in the quarry at the time, testifies that he heard David Blose order the plaintiff to drill out this hole. He says:

"Elias was coming with a bucket of water to assist a man who was working on the steam engine. Davie Blose asked Elias, 'Where are you going?' He told him that he as going to assist the men 'working on the

Digitized by Google

engine. He said, 'No, you come and dig out the hole, the middle hole.' Elias said he did not know how to do it. He instructed him to get a piece of machinery to lift the rock, not a drill, a bar. It is a kind of lever. He put some water in the hole, David Blose did, and showed Elias how to drill. After that, I was working in a different part of the quarry and all I remember was the explosion. That is all I know about the case."

David Blose's testimony conflicts somewhat with these statements, but that is immaterial on the question, whether there was any evidence to go to the jury in support of the plaintiff's claim.

There is evidence tending to show that the plaintiff was not an experienced quarryman in that branch of the work, more immediately connected with the blasting itself. He testifies that he was principally employed about the engine, although he sometimes assisted in drilling the holes by hammering on the top of the hand drill, held by a quarryman. It is undisputed that he had never been employed in digging out the charge from unexploded holes. Indeed, there is testimony to the effect that this had never before been done, at least while plaintiff worked there. The plaintiff was thus taken from his ordinary employment, and put at work that he never before had done, and there is no evidence to show that Blose gave him any other instructions than merely to dig out the hole with the crowbar or lever described, and to use water in doing so. And as Blose himself was examined at great length, it must be inferred that no caution, or explanation of any kind, was given as to the danger accompanying the operation plaintiff had undertaken. The evidence does not show that plaintiff was an experienced quarryman, in the matter of conducting the blasts or the work of preparing and charging the holes with explosives. He was an ordinary laborer in the quarry pit, working for 17 cents an hour, and could speak very little English, his testimony having been given through an interpreter.

The general and personal duty imposed by law upon a master, to use reasonable care,—that is, care in proportion to the exigencies and danger of the situation, to safeguard the place and conditions in which and under which an employé is to work, certainly required that such a person as the plaintiff was, in respect to experience and intelligence, should have been specially warned as to the danger of the work he was ordered to do, if, indeed, under the circumstances shown, he should have been allowed to attempt the work at all. Yet, there is ample testimony tending to show that he was not told that the work was exceedingly dangerous, even with water in the hole, or that the cap would be set off by a comparatively light blow of the tool with which he was working, and would explode the charge in the hole. He was merely told to proceed with the work, and he did so, putting water in and pounding with the heavy iron drill, as directed by the mine boss, until the explosion occurred, with the consequent loss of both his eyes.

One of the main contentions of the defendants is, that Fritzinger, plaintiff's co-employé, came to where the plaintiff was digging the hole, as described by Blose, and began digging an adjoining unexploded hole; that the Fritzinger hole was the one that exploded later and injured George; that the injury thus occasioned was caused by

Digitized by Google

the negligence of Fritzinger, George's co-employé, and the defendants were not responsible. But, unfortunately for this contention now made by the defendants, the verdict of the jury negatived the existence of such facts. The court submitted this contention to the jury, with conspicuous fairness to the defendants, charging as follows:

"A good deal of the defendants' testimony bears upon the subject that I have already spoken to you about, but the principal defense is that the plaintiff was injured by the negligence of a man for whom concededly the defendants were in no way responsible; that is to say, Fritzinger, if that is his name. If that is true, if the injury to the plaintiff was caused as Fritzinger said himself upon the stand, then the defendants are in no way responsible for his act, with this single qualification: that if Mr. Blose was representing the defendants, under the instructions I have just given you upon the preceding branch of this subject, and if he saw Fritzinger about to tap this hole with a drill, then unquestionably it would have been his duty to do what he could to prevent as dangerous a thing as that, and if he saw it and failed to do it, then, of course, he might have been negligent in the discharge of that duty. But the testimony on that point, I think, is comparatively slight. I cannot withdraw it from the jury, but I do not think the jury will be likely to pay much attention to the testimony upon that subject. I think they will be likely to direct their attention to the point about which I have just spoken, namely, whether Fritzinger did do the thing which he said he did, and whether it was that that caused the injury to the plaintiff; because, I repeat, if he did, then the injury was caused by Fritzinger's act, and he was not directed to do that by Blose or by anybody else, so far as appears. It was a voluntary act upon his own part, if it took place in that way."

After such a charge, the jury must, by their verdict, be taken to have negatived the facts upon which this contention was founded, and consequently we have before us the case of an explosion at a hole at which George was put to work by Blose without instructions.

It should not be overlooked that Mr. Williams, chemist at the United States arsenal at Frankford, whose business it was to deal and experiment with explosives of all kinds, after hearing, in a hypothetical question, the facts of the present case, testified as an expert that he should consider "that for any person to order a man to clean out such a hole so charged, with an iron bar was either criminal carelessness or criminal idiocy. The proper method in such a case is to drill another hole in the vicinity of the undischarged hole, put in a fresh charge, explode that, and so explode the undischarged hole." To the same effect was the testimony of another witness, for a long time familiar with the operation of quarries. This testimony was before the jury, and, if believed, it made no difference which hole exploded, because the negligence would be in permitting loaded holes to be dealt with at all in this manner. It is true that Handwerk, the superintendent of the quarry, testified that there were standing orders that unexploded holes were not to be drilled out, but nothing was said as to whom these orders were communicated, and certainly there was no evidence that they were communicated to plaintiff. An offer was afterwards made by defendant, to prove that Handwerk instructed Blose, as he was about to descend into the quarry after the attempts had been made to discharge the holes, that none of the unexploded holes should be drilled out. This offer was properly refused by the learned judge, on the ground that it was not also offered to show that

Digitized by Google

the instructions to Blose were passed on to the plaintiff. We are dealing now with what must be conceded to be a primary and absolute duty of the master to the servant, the liability for the nonperformance of which the master cannot relieve himself by delegating it to any other person, whether of the highest or lowest rank in his service.

Much argumentation has been devoted by counsel on both sides to the question whether David Blose was to be considered as a vice principal of the defendants, or merely a fellow servant of the plaintiff, the consequence on the one hand being that defendants would be responsible for injuries occasioned by his negligence, while on the other, it would be merely the negligence of a fellow servant, and one of the risks assumed by plaintiff in entering defendants' employment. While at one time the so-called theory of vice principal was much resorted to, in working out the liability of a master for injuries to an employé incurred in his service, it has, subsequently to the decision of the Ross Case, 112 U. S. 377, 5 Sup. Ct. 184, 28 L. Ed. 787, been largely discarded, at least in the federal courts, and the distinction between negligence that is to be imputed to the master, and that which is to be considered as merely and solely the negligence of a fellow servant, has been placed upon a more satisfactory and rational basis. In the opinion of Mr. Justice Brewer, delivering the judgment of the Supreme Court in B. & O. R. R. Co. v. Baugh, 149 U. S. 368, 13 Sup. Ct. 914, 37 L. Ed. 772, the whole subject has been instructively discussed, and it has been clearly and logically settled upon what grounds a master may be held liable for injuries incurred by a servant in the course of his employment. The question is always, whether the negligence charged is the neglect of a primary and absolute duty of the master to the servant. If such be its character, no delegation of the performance of that duty to another, no matter how inferior his rank may be in the master's service, can, as we have already said, relieve the liability of the master for its neglect. The master does not insure the safety of the servant, but he does undertake that the place in which he works, and the appliances with which he works, and the conditions under which he works, shall be reasonably safeguarded. A dereliction of the humblest employé in the master's service, to whom any part of such duty has been delegated, is the dereliction of the master. Therefore, in the language of the opinion just referred to, it will be seen that the question turns rather on the character of the act than on the relation of the employés to each other. It has never been doubted that a master's duty to an ignorant or inexperienced workman, indeed to any workman about to undertake more than ordinarily dangerous work, is to explain its dangerous character and give adequate caution as to its prosecution. This duty is of the absolute, personal character above referred to, and is not discharged by merely intrusting its performance to a properly selected subordinate. Nothing short of actual notice of the danger to the workman who is to encounter it, with such cautionary explanation as may enable him to avoid it, will satisfy the requirement of the law, and the default of the intermediary, whether he be the highest officer in control, or merely a fellow workman of the one exposed to the danger, is the default of the master. In such

Digitized by Google

a case, all question as to whether the immediate cause of the injury was the negligence of a fellow servant, is eliminated, and inquiry as to the extent of the control and authority committed by the master to the culpable agent, beside the issue, which is solely as to the character of the act or omission, and not the rank, of the offending servant.

Reasonably efficient supervision of work of the dangerous kind here described, must be held to be one of the primary and personal duties of the master. That there was evidence tending to show that such supervision was lacking here, cannot be denied. No evidence was adduced on behalf of the defendants, to show either efficient supervision or the establishment and enforcement of rules and regulations adequate to the protection of such employés as the plaintiff. The plaintiff charges in his statement of claim, that defendants conducted their business generally in an improper and unsafe manner, and specifically were negligent in "managing, attending to, or removing unexploded charges in blast holes," and the jury would not be unjustified in inferring from the evidence that this charge was sustained. Such default in the general management and conduct of so dangerous a business, was a default of the defendants.

The fact that the plaintiff was put at work, without being informed of its exceedingly dangerous character, as testified to by the expert witnesses above referred to, not only justified but required that the case should have been submitted to the jury, and as the refusal of the judge to enter judgment for the defendants, non obstante veredicto, is the only assignment of error, the judgment below must be affirmed.

(154 Fed. 640.)

FREYGANG et al. v. VERA CRUZ & P. R. CO.

VERA CRUZ & P. R. CO. v. FREYGANG et al.

(Circuit Court of Appeals, Fourth Circuit. May 29, 1907.)

Nos. 706, 707.

1. CONTRACTS—RAILROAD BRIDGE CONSTRUCTION—ESTIMATES OF ENGINEERS.

A contract for railroad bridge construction in Mexico provided that the railroad company's engineers should supervise the work, approve the number of men to be sent from the United States, their salaries, fitness, the number to be employed, that they should O. K. all important purchases of material and those obtained outside of Mexico, with the right to determine what were important, to voucher and approve all expense bills, and pay rolls in triplicate, etc. *Held* that, the railroad company having accepted and paid 44 out of 49 of such estimates without question, the court in an action on the contract properly held that the estimates so made were prima facie evidence of the work done, and that the account should be based on the estimate, subject to correction, contradiction, or impeachment for error, mistake, omission, or concealment.

2. CORPORATIONS—AGENTS—AUTHORITY—REPUDIATION OF ACTS.

Where a contract for railroad bridge construction on a percentage basis originally limited the contractor's net compensation for building the original bridges to $33,000, and thereafter the assistant to the president of the railroad company was sent to confer concerning expediting the work, and then waived the compensation limit so fixed, and the railroad company did not promptly repudiate his acts, it would be assumed that he had authority to act in the premises, and that the waiver was binding on the corporation.

Digitized by Google

3. CONTRACTS—PERFORMANCE—CURRENCY—RATE OF EXCHANGE.

Where a contract, made on the percentage basis, for railroad bridge construction in Mexico provided for payment on the Mexican money basis, the exchange to be effected on the Mexican rate existing at the time in Mexico City, the bridge company, having contracted with certain employés taken from the United States for payment in United States currency or in Mexican at a flat rate of exchange, was chargeable with any loss suffered because of changes in the rate of exchange during the performance of the contract.

4. SAME—ACCOUNTING.

A contract for Mexican bridge construction provided that the railroad company should pay the contractor the exact cost plus 15 per cent. for his profit, and that all payments should be made in Mexican money at the rate of exchange existing at the time of payment in Mexico City. $686,481.37 was paid in Mexico to American employés, and to reimburse plaintiff for this sum the railroad company forwarded gold drafts for $343,240.68, which the bridge company converted into Mexican currency at the rate of $2.20, making a gain of $31,203.69. *Held*, that the bridge company was properly required to account for such gain to the railroad company.

5. INTEREST—UNLIQUIDATED DEMANDS—DEMAND—SUIT BROUGHT.

Where a railroad bridge construction contract was made in Missouri for performance in Mexico, and suit for an accounting was brought thereon in Maryland, where funds of the railroad were attached, the contractor was entitled to recover interest on the balance due from the date of demand or suit brought, under Rev. St. Mo. 1899, § 3705 [Ann. St. 1906, p. 2073], declaring that creditors shall be allowed interest at 6 per cent., when no other rate is agreed on, for all moneys after they become due and payable on written contracts and on accounts after maturity and demand made.

In Error to the Circuit Court of the United States for the District of Maryland.

Edward Duffy and William C. Scarritt (Bond, Robinson & Duffy and Scarritt, Scarritt & Jones, on the briefs), for the Midland Bridge Company.

Carroll T. Bond and J. Southgate Lemon (Marbury & Gosnell, on the briefs), for the Vera Cruz & Pacific Railroad Company.

Before PRITCHARD, Circuit Judge, and WADDILL and DAYTON, District Judges.

DAYTON, District Judge. These are cross-writs of error, sued out in an action of assumpsit originally instituted in the superior court of Baltimore City, Md., by Henry Freygang and Albert A. Trocon, copartners, trading as the Midland Bridge Company, against the Vera Cruz & Pacific Railroad Company, which was regularly removed into the Circuit Court of the United States for the District of Maryland by the defendant. Hereinafter the original plaintiffs will be referred to as the "Bridge Company" and the original defendant as the "Railroad Company." The suit was instituted in the state court on September 12, 1904, to recover $127,976.63, and on the day following an attachment was sued out, which was served upon Allan McLane, receiver of the Maryland Trust Company, garnishee, who subsequently confessed possession of sufficient funds belonging to the railroad company to satisfy the demand. By various proceedings had, the pleadings were settled by the court below, and the parties came to issue

Digitized by Google

substantially upon the general issue of nonassumpsit and counterclaim. On January 22, 1906, by written stipulation filed, trial by jury was waived, and the court was requested to find the facts specially, and on February 7, 1906, the parties further agreed that exceptions to the admissibility of evidence, to requests for special findings, and to rulings of the court should be reserved on both sides, to be reduced to writing and filed within a reasonable time thereafter, with same effect as if so reduced to writing before findings made; and thereupon on that day the court filed its findings of fact, embraced in 30 distinct paragraphs, and, as a conclusion of law based thereon, entered judgment in favor of the plaintiff bridge company against the defendant railroad company for an aggregate sum, after allowing all credits, of $38,406.43, with interest from the date of the judgment and costs. To this judgment the bridge company has assigned 8 errors and the railroad company 23. Although the record is voluminous, a brief statement of the facts will be sufficient: The railroad company, a West Virginia corporation, was on August 24, 1900, engaged in the construction of a line of railroad in Mexico. On that day it entered into a contract with the bridge company, a copartnership, the members of which were citizens of Missouri, whereby the bridge company was to furnish material, and construct, complete, the superstructure of five bridges on said railroad line, paint the metal work of such superstructure, and put in place the railway floor, in accordance with plans and specifications attached. For this work the railroad company agreed to pay "the actual cash cost thereof, plus fifteen (15) per cent. for his profit." It was further provided that, in computing the cost of work, there should be included "all items of material, labor, and transportation of men, materials, and plant to and fro," but no allowance was to be made "for cost of plant or deterioration of same, or for the time or personal expenses (other than railroad and Pullman fares) of either member of the firm, or for interest on money required to carry on the work." The contract further provides that medical attendance and medicine at site should be paid by the railroad company, but no other medical or hospital expenses should be so paid; that the railroad company should pay for the housing of employés, "but the commissariat department shall be considered as a thing apart from this contract. The contractor (bridge company) shall manage it at his own expense, and shall charge enough for board to reimburse himself for the entire outlay connected therewith." It further provides:

"In order to keep accounts straight, all payments are to be made in Mexican money, and the rate of exchange to be used for charges in American money shall be that ruling in the city of Mexico on the date of the engineer's estimate."

It then provides the details of how work should be done, by whom approved, and other matters not material here. This contract was modified February 4, 1901, in writing, in regard to traveling expenses, but this modification is not material. On October 10, 1901, the bridge company was awarded the building of the substructure of the Boca del Rio bridge upon same terms contained in original contract, and again in September, 1902, and January, 1903, it was awarded the con-

Digitized by Google

tract of building all unbuilt bridges and culverts on the road (with two portions excepted), and also the railroad company's shops at Tierra Blanca. To complete all this work required a period of over four years, and it is not surprising that, when the time of adjustment and settlement of accounts came, differences should arise between these companies. These differences are the cause of this controversy.

The questions are almost wholly ones of fact. The court below very patiently heard the testimony, and, sifting it most carefully, found the facts therefrom. The many exceptions taken and alleged errors assigned by the railroad company need no very extended consideration. Out of the 23, 2 are expressly abandoned. The first, which is perhaps most strenuously insisted upon, is based upon the fact that the court below held the estimates made monthly by the engineer in charge, who was selected, employed, and paid by the railroad company, to be prima facie evidence of the work thus done, and that the account should be based upon such estimates, subject to correction, contradiction, or impeachment for error, mistake, omission, or concealment. When it is remembered that these engineers, employed by the railroad company, by the terms of the specifications expressly made part of the contract, and by the terms of the contract itself, were empowered and required to supervise all this work; to approve the number of men to be sent from the United States to the work, the salaries to be paid them, and to determine their fitness for the work before they were engaged; to determine and approve the number of men to be employed at each site, ordering more where too few were engaged, and diminishing the number where too many were at work; to make reduction for negligence in having idle men on hand; to O. K. the purchase of material obtained outside of Mexico, and all important purchases of material in same, with right to determine what were important; to require all expense bills to be properly vouchered, and to allow none paid without being approved by them; to make these monthly estimates upon complete vouchers in triplicate for all bills and upon signed pay rolls in triplicate furnished by the bridge company, which estimates and statements were so made to the number of 49, of which the first 44 were paid by the railroad company without serious question or dispute at the time, and part of No. 45 was also paid—when, we say, all these facts are taken into consideration, we can see no ground for complaint upon the part of the railroad company of this ruling. These estimates became so far agreed upon as to become properly the basis of the settlement.

In the original specifications the limit of net compensation to the bridge company for the building of the original five bridges was fixed at $33,000, which in the addenda thereto was raised to $40,000. The trial court allowed a sum in excess of this amount, holding as a fact that this limit had been expressly waived by the railroad company. The latter here complains of this action, insisting that the evidence upon which this alleged waiver is based was incompetent to establish such, and should have been excluded. This evidence briefly is that in April, 1901, during the construction of the Papaloapam bridge, conferences were held between Jay, assistant to the president of the railroad company, the resident engineer, and one of the members of

Digitized by Google

the bridge company with a view to expediting work on this bridge, and the bridge company insists that as a result it undertook to so expedite and complete the work; Jay, on behalf of the railroad company, agreeing to waive this net profit limit. Waddell, one of the engineers, testifies, corroborating Freygang and other witnesses introduced by the bridge company, that he received a letter from Jay setting forth this waiver, but it had since become lost. Jay denies he made such waiver, or that he had authority to do so. We think the trial court rightly held that this waiver was made. It is undoubtedly true the work was expedited. The prior delay in the work upon this eight-pier bridge had been solely caused by the failure of the railroad company to deliver the bridge company's plant and the necessary material upon the ground by reason of the noncompletion of its track to that point. This delay was costly to the contractors, and it would seem that it and the extra cost of expedition furnished an adequate consideration for this waiver. Jay was assistant to the president, and when sent to confer must be assumed to have had power to act, or, if he did not have such power, prompt repudiation upon the part of his chief (the president) of his act was necessary.

These are the principal and important matters complained of by the railroad company. The many other exceptions relate to specific items, to technical objections to the finding or failure to find certain facts and conclusions of law, which we have carefully considered, and find without merit.

Coming now to the eight exceptions taken to this judgment by the plaintiff bridge company, it is sufficient to say that they relate substantially to three items, and they may be stated briefly as follows: First. To the court's refusal to allow it the sum of $1,062 for premium paid surety company for its suretyship on bond required by contract to be given by the bridge company to the railroad company. Second. To the court's allowance of a credit to the railroad company of $31,203.-69 for "difference of exchange on gold pay rolls paid in Mexico." Third. To the court's refusal to allow interest upon the indebtedness from the time due.

In argument here the first claim has been abandoned, and need not be further considered.

The second is earnestly insisted upon, and requires some consideration. The whole controversy here grows out of the fluctuating value of Mexican money compared with the gold standard money of the United States. From the beginning of the contract, in August, 1900, until May, 1901, the rate of exchange varied between $1.96 to $2 of Mexican for $1 United States. During the remainder of the time spent in the execution of the contracts, the rate fluctuated from $2 to $2.67 of Mexican for $1 United States. A large number of workmen from the United States was employed, and the bridge company, very soon after the work commenced, prepared a contract, which it required its American employés to enter into, which provided, among other things, for the matter of expense incurred by them in going to Mexico to the work and returning to the United States, a scale of wages to be paid, based on the United States gold dollar, dependent upon length of service; that these men should be charged board at the rate of

Digitized by Google

$8.40 Mexican per week and hospital fees at the rate of $1 Mexican per month for each $100 Mexican and fraction thereof of salary; and that the men should be paid at their rated wages in gold at Kansas City, or, if paid on the work in Mexico, in Mexican currency at the rate of two for one. It is distinctly and always to be borne in mind that this contract was between the bridge company and its American employés, and that the railroad company was not a party to it; that the contract between the railroad company and the bridge company expressly provided:

"In order to keep accounts straight, all payments are to be made in Mexican money, and the rate of exchange to be used for charges in American shall be that ruling in the city of Mexico on the date of the engineer's estimate."

And, further:

"No change or alteration shall be made in the terms or conditions of this agreement without the written consent of both parties hereto."

Subject to these terms and upon this basis of payment, the bridge company was to be reimbursed its actual expenditure for labor and material and 15 per cent. upon this actual expenditure for its compensation. If the bridge company conducted a commissary, by the terms of the contract it was to be a thing apart, and conducted at its own expense. If it ran a boarding house, it was to charge the men board enough to reimburse it, if not, bear the loss; and so, too, if it established a hospital, it could call on the railroad company for medical attendance and medicine "at the site,"—nothing more.

By the terms of its contract the bridge company was to be paid upon the Mexican money basis, and the exchange of moneys was to be effected upon the Mexican rate existing at the time in Mexico City. The most natural thing for it to have done, in our judgment, would have been to have also paid its men, run its commissary, its boarding houses, and its hospital upon this same basis. It may have been somewhat inconvenient, but, if on this account it saw fit by private contract with its men (a contract of chance and hazard, too) to establish a new and different rate of exchange from that fixed by the contract it held with the railroad company, by which it might have gained, but as it turned out, in fact, lost, it certainly cannot expect the railroad company to indemnify it for such loss. Suppose, as contended for, that practically in the sale of its goods from the commissary, in the conduct of its boarding houses and hospital, by virtue of its having gotten on the losing side of this its private contract with its men, it was selling goods, boarding and treating its men at a discount, upon fixed rates, whose fault was it? If it fixed the wage scale, the commissary prices, the boarding rates and hospital fees upon the gold standard, while it was to receive its money on the Mexican one, it certainly did it with its eyes open. Counsel with great earnestness have dwelt upon the fact that the estimates approved by the engineers in charge allowed for this arbitrary basis and the resulting loss arising therefrom, and with much ability and learning argue that the railroad company is bound by these estimates and this action of its engineers; citing very many authorities. As these authorities, however, relate to differences arising between contractors and employers touching matters

Digitized by Google

distinctly left by the contract to the arbitrament of the engineers, or distinctly within the scope of such engineers' duty or authority, we must put them aside as not being in point; for here the matter of fixing the rate of exchange or ratifying any arbitrary or other rate was wholly outside of the scope of the engineers' authority or power, because against the very terms of the contract between the principals which had fixed it, and could not be changed except in writing by the principals themselves.

The trial court ascertained:

"That the sum paid in Mexico in settlement with American employés was in Mexican currency $686,481.37. To reimburse this sum the plaintiffs obtained from the defendant gold drafts amounting to $343,240.68. These gold drafts they converted into Mexican currency at a rate of at least $2.20, and received therefor at least $775,129.49 Mexican, making a gain over the $686,481.37 of $68,648.12 Mexican. This sum converted into gold at $2.20 is a gain of $31,203.69, and for this sum the plaintiffs should account to the defendant."

We think this holding right under the terms of the contract and the conditions and circumstances existing touching these transactions, and therefore hold the bridge company's assignment of error in this particular to be unavailing.

This brings us to the last objection made by the bridge company touching the disallowance of interest. While it is true this cause was trial in Maryland, where by statute the allowance of interest is left to the discretion of the court, yet it is also true that this contract was a Missouri one. The statute of this latter state (section 3705, c. 40, Rev. St. Mo. 1899 [Ann. St. 1906, p. 2073]), provides:

"Creditors shall be allowed to receive interest at the rate of six per centum per annum when no other rate is agreed upon for all moneys after they become due and payable on written contracts and on accounts after they become due and demand of payment is made."

The Supreme Court of Missouri in construing this statute has held that such interest will not be allowed on account until after demand is made. Evans v. Western Brass Mfg. Co., 118 Mo. 548, 24 S. W. 175; Southgate v. A. & P. R. R. Co., 61 Mo. 89. But it has further held that the institution of suit constitutes such demand, and in case no prior demand has been proven, then interest should be awarded from the date of service of process, or, in the absence of proof of date of service, from the commencement of the suit. Dempsey v. Schawacker, 140 Mo. 680, 38 S. W. 954, 41 S. W. 1100. The controversy arose in Maryland only by reason of the accidental location of the attached funds there of the railroad company. By the finding of the trial court, an aggregate of $38,406.43 remained unpaid, and suit to recover it had been instituted on September 12, 1904, nearly 17 months before judgment rendered. We think the bridge company clearly was entitled to interest for this period, both under the Missouri statute and the federal authorities. Curtis v. Innerarity, 6 How. 146–154, 12 L. Ed. 380; Sturm v. Boker, 150 U. S. 312–341, 14 Sup. Ct. 99, 37 L. Ed. 1093; Crescent Mining Co. v. Wasatch M. Co., 151 U. S. 317–323, 14 Sup. Ct. 348, 38 L. Ed. 177; Spalding v. Mason, 161 U. S. 375–385, 16 Sup. Ct. 592, 40 L. Ed. 738.

Digitized by Google

We therefore find the court below erred in not allowing to the bridge company interest upon its judgment of $38,406.43 from September 12, 1904, the date of the institution of the suit, and for this reason only the cause upon the writ of error of the plaintiff bridge company is reversed and remanded, with costs against defendant railroad company. And the cause upon the writ of error sued out by the railroad company against the bridge company is in all respects affirmed, with costs to the bridge company.

(154 Fed. 489.)

RAINBOW et al. v. YOUNG, Sheriff.

(Circuit Court of Appeals, Eighth Circuit. June 7, 1907.)

No. 2,583.

HABEAS CORPUS—MODE OF REVIEW—WRIT OF ERROR.

Under Rev. St. §§ 763, 764 [U. S. Comp. St. 1901, pp. 594, 595], authorizing an appeal from the final decision upon an application for a writ of habeas corpus or upon such writ when issued, a final order of the Circuit Court denying petitioner's application for discharge on a writ of habeas corpus cannot be reviewed by the Circuit Court of Appeals on a writ of error, but only on an appeal.

[Ed. Note.—For cases in point, see Cent. Dig. vol. 25, Habeas Corpus, § 102.]

In Error to the Circuit Court of the United States for the District of Nebraska.

A. W. Lane, Asst. U. S. Atty. (Charles A. Goss, U. S. Atty., on the brief), for plaintiffs in error.

Thomas L. Sloan (W. E Whitcomb, on the brief), for defendant in error.

Before VAN DEVANTER and ADAMS, Circuit Judges, and RINER, District Judge.

VAN DEVANTER, Circuit Judge. By this writ of error Charles Green Rainbow, James Fisher, and Peter Decora challenge a final order of the Circuit Court denying their application for a discharge upon a writ of habeas corpus. Such an order is not subject to review upon writ of error, but only upon appeal (Rev. St. 763, 764; Act March 3, 1885, 23 St. 437 [U. S. Comp. St. 1901, pp. 594, 595]; In re Neagle, 135 U. S. 1, 42, 10 Sup. Ct. 658, 34 L. Ed. 55; In re Morrissey, 137 U. S. 157, 11 Sup. Ct. 57, 34 L. Ed. 644; Rice v. Ames, 180 U. S. 371, 21 Sup. Ct. 406, 45 L. Ed. 577; Fisher v. Baker, 203 U. S. 174, 182, 27 Sup. Ct. 135, 51 L. Ed. 142), and therefore we are not at liberty to consider the questions sought to be presented, although ably discussed by counsel.

The writ is accordingly dismissed.

Digitized by Google

(154 Fed. 665.)

CHICAGO, M. & ST. P. RY. CO. v. NEWSOME.

(Circuit Court of Appeals, Eighth Circuit. May 13, 1907.)

No. 2,462.

DAMAGES—PERSONAL INJURIES—FUTURE PAIN.

Plaintiff in an action for injuries is entitled to recover only for such future pain and suffering as are reasonably certain to result on account of the injury, as distinguished from pain and suffering that may or are merely probable or likely to result.

[Ed. Note.—For cases in point, see Cent. Dig. vol. 15, Damages, § 236.]

In Error to the Circuit Court of the United States for the District of Minnesota.

M. B. Webber, for plaintiff in error.

W. D. Abbott (Henry M. Lamberton, L. L. Brown, and S. H. Somsen, on the brief), for defendant in error.

Before SANBORN, HOOK, and ADAMS, Circuit Judges.

HOOK, Circuit Judge. Newsome, who was stealing a ride on a railroad train, says he was required to get off while the train was in rapid motion by wanton and malicious threats of personal violence by a brakeman, and in doing so fell between the cars and was injured. He sued for damages, and secured a verdict and judgment. In charging the jury the trial court said that, if he was entitled to recover at all, he might recover for "the pain and suffering which he had had to endure on account of the injury, or will be likely to have to endure hereafter." This part of the charge was excepted to, and it is erroneous. The rule of C. & N. W. Ry. Co. v. De Clow, 124 Fed. 142, 61 C. C. A. 34, restated in C., M. & St. P. Ry. Co. v. Lindeman, 143 Fed. 946, 75 C. C. A. 18, is that the future pain and suffering for which recovery may be had must be such as are reasonably certain to result, not such as may result or are merely probable or likely. The error in the instruction compels a reversal, and we refrain from considering the other assignments of error, since the matters mentioned in them may not arise again.

The judgment is reversed, and the cause remanded for a new trial.

(154 Fed. 665.)

UNIVERSAL BRUSH CO. v. SONN et al.

(Circuit Court of Appeals, Second Circuit. June 29, 1907.)

No. 195.

1. PATENTS—INFRINGEMENT—METHOD OF MAKING BRUSHES.

The Morrison patent, No. 717,014, for a method of making brushes, which consists in depositing a mass of heated plastic composition, which becomes hard when cooled, within a chambered brush frame having a contracted aperture, and forcing one end of the groups of bristles into the composition when in the plastic state, is not a pioneer, but covers merely an improvement on known methods, and must be limited strictly to the particular advance made. It is not infringed by a construction in which the aperture of the chamber is not contracted, but the sides are

Digitized by Google

perpendicular to the bottom, but in which the chamber has a raised portion in the center, which assists in holding the composition in place by adhesion and also lightens the brush.

2. SAME—CONSTRUCTION OF CLAIMS.

A patent cannot be given a construction broader than its terms, in order to cover something which might have been claimed, but was not.

[Ed. Note.—For cases in point, see Cent. Dig. vol. 38, Patents, § 241.]

Appeal from the Circuit Court of the United States for the Northern District of New York.

The decree of the Circuit Court for the Northern District of New York held valid and infringed the first claim of letters patent No. 717,014, granted December 30, 1902, to William Morrison, for a new and useful improvement in making brushes. The opinion below is reported in 146 Fed. 517.

J. P. Bartlett and F. W. Cameron, for appellants.

G. A. Mosher, for appellee.

Before LACOMBE, TOWNSEND, and COXE, Circuit Judges.

COXE, Circuit Judge. The Morrison patent belongs to an old and crowded art. A generic patent in such an art would seem out of the question; at all events we are convinced that we are not now dealing with such a patent.

The principal feature of the invention consists in the method of making brushes, having a chambered frame or back of any desired material, by inserting tufts of bristles into heated, plastic composition deposited in the chamber, which composition when cool holds the bristles firmly in position. The claim in controversy sufficiently describes the invention. It is as follows:

"The herein described method of making brushes which consists in depositing a mass of heated, plastic composition, within a chambered brush-frame having a contracted aperture, forcing one end of a group of exposed bristle-tufts through the aperture and into the composition, and at the same time giving form to the face of the composition by mold-pressure, and supporting the bristles in the desired position projecting from the composition out through the face-aperture, until the composition cools and hardens."

The defenses are lack of novelty and invention and noninfringement. At the date of Morrison's application it was old to hold the bristles in position on brush backs by the use of heated, plastic material, which became hardened when cool. Hicks, in 1867, used cement. In describing a shaving brush made pursuant to his method he says:

"The bristles, f, are bound together in the ordinary manner and are passed into position through the upper opening in the part, d, of the handle and are then cemented in position."

Estabrook, in 1866, received a patent for a brush in which "the bristles inserted through a perforated plate are imbedded and held firmly in a cement of any suitable substance." The Estabrook patent contains the following disclaimer:

"I make no claim to a brush composed simply of bristles and a back made entirely of cement or a molded composition; nor do I claim, for making such brush, the employment of a plate to hold the bristles while being inserted in the composition, or while it may be in the act of being applied to them, such

Digitized by Google

plate being subsequently to be drawn off the bristles, so as to leave them adhering to the cement or composition back."

In 1878 Estabrook received another patent for improvements in brushes, one of the claims covering a brush "having a wooden back and handle and a composition bristle holder, the material of which fits closely around and covers the ends of the bristles, in virtue of the application, aided by pressure, of said composition to the bristles while in a plastic state."

Morrison, in May, 1895, received a patent which contains a claim for the method of making brushes which consists in "molding a bristles supporting block from plastic material around tufts of bristles in one section of the mold allowing the molded material to harden by cooling, and softening the exposed surfaces of the molded material by heating, and then forcing the softened portion of the bristle-block into an undercut recess in the face of the brush-back."

Indeed, our conclusion, that the claim in question must be confined closely to the method described in the specification and illustrated by the drawings, needs no other support than the statements of the patent itself.

The patentee clearly recognizes the prior use of plastic material as a holder for supporting the bristles in position and expressly points out that his improvement upon the method "commonly practiced" consists in forcing the bristle ends directly into the heated composition first deposited into the chambered frame instead of forming a partial bristle supporting pad before inserting the bristles through the face-aperture. In other words, he saves time by omitting one step in the process as formerly applied. Another asserted advantage is stated in the specification as follows:

"By so doing I am able to determine exactly the proper quantity of composition to fill the chamber in the brush head, without having any excess to be forced out of such chamber when the bristles are inserted therein."

He reached precisely the same result theretofore attained by himself and other brush makers, but he did it by using the chamber in the brush face as a matrix to receive the plastic material—thus saving time and, presumably, money. This simplifying of the process may have involved an exercise of the inventive faculties, but surely does not entitle its author to rank as a pioneer. Such improvements are a part of the evolution and natural development of every art. An inventor of such an improvement must be confined strictly to the particular advance which he has made and cannot levy tribute on the improvements of others.

It will be noted that the first step in the method of the claim is the depositing of "a mass of heated, plastic composition within a chambered brush-frame having a contracted aperture." If the words "contracted aperture" be construed to mean an opening of less diameter than that of the chamber into which it opens, it is conceded that the defendants do not have that feature of the claim. Their brushes are made pursuant to letters patent, issued July 17, 1900—prior to the grant of the Morrison patent in suit—and another patent issued June 6, 1905. Their brush back does not have a chamber with a contracted opening,

Digitized by Google

in the sense stated above, but one whose walls are perpendicular and at right angles to the bottom of the chamber. There is no undercut or expansion of the part below the opening as shown in the drawings of the patent in suit. The central portion of the defendants' brush back, marked "B" in their patent and called an "island" in the testimony, is slightly raised above the bottom of the chamber and helps to lighten the brush and hold the composition in place.

We have no doubt as to the meaning of the claim read in the light of the description and drawings. It means precisely what it says—a brush-frame within a chamber therein having an aperture smaller in size than the size of the chamber into which it opens. The words "contracted aperture" mean smaller opening, an opening smaller than the chamber, an opening caused by drawing in, abridging, bringing within narrower compass, the walls of the chamber at that point. Any other construction, in our judgment, does violence to the English language.

We are not impressed with the suggestion that the patentee had in mind some structure of the prior art having a flaring chamber and intended to limit his claim to a chamber less extensive. Such a rule of interpretation would revolutionize patent law. We must construe the patent in the light of what it says, not what it might have said; we must hold the patentee to what he has put on paper, not what he may have had in his mind. If there were any doubt at all regarding the meaning of the words "contracted aperture" that doubt is dispelled by an examination of the specifications, where a chamber with a contracted aperture is clearly described and shown and the reasons therefor pointed out.

The patent describes a brush having a metal frame, but the specification says that the frame may be made of any desired material in any known way. The defendants' brush back is of wood which, it is said, does not require an aperture so contracted as does metal, but however this may be it is obvious that in order to hold an alleged infringer it is necessary to show that he has, irrespective of the material he may use, adopted the method of the claim. Should some one discover, for instance, a material for a brush back which would so co-act with the plastic material that the latter would firmly adhere without the necessity for a recess of any kind, it would probably not be contended that a method of manufacture, which dispensed with the chambered frame altogether, infringed the claim in issue. In short, if for any reason the defendants are enabled to dispense with one of the elements of the claim, or, to speak more accurately, with one step of the process, they cannot be held as infringers. That they dispense with the chamber having a contracted aperture we see no reason to doubt. It is argued that this limitation was necessary and may be disregarded or omitted altogether.

We are asked to reconstruct the claim by substituting the word "face" for the word "contracted" and adding to the claim the following:

"Said face aperture being sufficiently narrow or contracted to retain said composition."

Whether such a claim, if originally inserted in a patent describing a metal brush back, would disclose invention and an operative method

Digitized by Google

of construction we are not called upon to decide; it is enough that the patentee did not so word the claim and it is beyond the province of the court to rewrite it. In Keystone Bridge Co. v. Phœnix Iron Co., 95 U. S. 274, 24 L. Ed. 344, Mr. Justice Bradley, at page 278 of 95 U. S., page 346 of 24 L. Ed., says:

"They [the patentees] cannot expect the courts to wade through the history of the art, and spell out what they might have claimed, but have not claimed. * * * But the courts have no right to enlarge a patent beyond the scope of its claim as allowed by the Patent Office. * * * As patents are procured ex parte, the public is not bound by them, but the patentees are. And the latter cannot show that their invention is broader than the terms of their claim, or, if broader, they must be held to have surrendered the surplus to the public."

See, also, cases cited in National Bunching Co. v. Williams, 44 Fed. 190, 194, 12 L. R. A. 107.

We understand that the judge of the Circuit Court places the same construction upon the claim that we do. He regards the depositing of the heated, plastic material in a chambered brush frame having a contracted aperture as a necessary step in the method of the patent and concludes that there is no infringement unless the raised central portion, or "island," of the defendants' brush back is the equivalent for the "contracted aperture" of the claim. Believing that the patent is for a fundamental invention and entitled to a wide range of equivalents he concluded that the defendants, although they omitted the "contracted aperture" in their method, employed an equivalent in the raised central portion of their brush back.

As before stated we regard the patent as one for an improvement upon known methods of construction and entitled to a limited range of equivalents only. The brush head of defendants adheres to the back, but the method of accomplishing this result as shown and claimed in the patent is wholly absent.

The decree is reversed.

TOWNSEND, Circuit Judge, heard the argument, participated in the consultation, and voted to reverse.

Digitized by Google

(154 Fed. 653.)

MACRUM et al. v. UNITED STATES.

(Circuit Court of Appeals, Third Circuit. May 13, 1907.)

No. 30.

1. COURTS—JURISDICTION OF CIRCUIT COURT—ENJOINING WRIT OF ERROR.
A Circuit Court of the United States sitting in equity has no authority to enjoin a party to a judgment rendered on its law side from suing out a writ of error from the Circuit Court of Appeals to review said judgment.
[Ed. Note.—Enjoining proceedings in federal courts, see note to Clapp v. Otoe County, 45 C. C. A. 591.]

2. JUDGMENT—SATISFACTION—COMPELLING ENTRY—EQUITY—JURISDICTION.
A court of equity is without jurisdiction of a suit for a decree requiring the entry of satisfaction of a judgment at law, the court which rendered such judgment having full power over it, and to grant any relief in respect thereto which justice may require.
[Ed. Note.—For cases in point, see Cent. Dig. vol. 30, Judgment, §§ 1707–1713.]

Appeal from the Circuit Court of the United States for the Western District of Pennsylvania.

Johns McCleave, for appellants.
Nathan S. Williams, for appellee.

Before DALLAS and GRAY, Circuit Judges, and HOLLAND, District Judge.

DALLAS, Circuit Judge. The United States filed a bill of complaint in the court below, the first five paragraphs whereof set forth that in a proceeding which the complainant had instituted in that court for the condemnation of certain real estate of Nathaniel G. Macrum, trustee, there was a jury trial which resulted in a verdict for said Macrum in the sum of $15,607.17, with interest added from the date of condemnation proceedings, and that upon this verdict a judgment was entered in the sum of $17,526.04. The remainder of the bill, and the decree appealed from, are copied in the margin.[1]

We know of no precedent for a decree by a Circuit Court of the United States sitting in equity, forbidding a party to a cause upon its law side from suing out a writ of error for review of any reviewable decision in such cause. The authorities which maintain that in proper cases a chancellor may restrain proceedings at law are related to a chapter in judicial history which has no pertinency to the matter in hand. We are not dealing with a controversy as to the right of courts of equity to enjoin the judgments or other proceedings of courts of law. The question now to be decided concerns no such conflict, but is simply whether a Circuit Court of the United States has any authority whatever to prevent the suing out of a writ of error from a United States Circuit Court of Appeals; and this question we think is answered by the act of March 3, 1891, which, in establishing the last-mentioned courts, required them to exercise their appellate

[1]See note at end of case.

Digitized by Google

jurisdiction, without vesting elsewhere any power to obstruct it. Therefore a writ of error from a Circuit Court of Appeals, if warranted by the statute, is of right, and its formal allowance, though perhaps desirable, is not requisite. The court of first instance has no more authority to decide upon its propriety in advance of its issuance than it would have thereafter, when, indubitably, all questions affecting its validity or efficacy are for decision by the court from which it issued. Pullman's Palace Car Co. v. Central Transportation Co. (C. C.) 71 Fed. 809; City of Wilmington v. Ricaud, 90 Fed. 212, 32 C. C. A. 578; Louisville Trust Co. v. Stockton, 18 C. C. A. 408, 72 Fed. 1; Ex parte Virginia Commissioners, 112 U. S. 177, 5 Sup. Ct. 421, 28 L. Ed. 691; State v. Farlee, 1 N. J. Law (Coxe) 96. It would, however, "be a waste of time and an unnecessary continuance of litigation to simply enter an order setting aside the injunction and remanding the cause for further proceedings." Ex parte National Enameling Co., 201 U. S. 162, 26 Sup. Ct. 404, 50 L. Ed. 707. The dismissal of the bill must be ordered for lack of equity to support it. Except as it prayed for an injunction, the substance of the only relief sought by it was that an entry of satisfaction of the judgment at law should be decreed, upon such terms, if any, as might properly be imposed. But to accomplish this end a resort to equity was not requisite, for courts of law are not incompetent to deal justly with their own judgments. Holt et al. v. Dorsey was a proceeding at law (12 Fed. Cas. 428, No. 6,647), and yet the Circuit Court, upon motion made in that proceeding (16 Fed. Cas. 1309, Nos. 9,389, 9,390), directed an entry of satisfaction of the judgment therein, upon its being made to appear that such entry was warranted.

Under ordinary circumstances we would not intimate any opinion of our own in anticipation of possible future proceedings in a lower court; but in view of the manner in which this controversy, in its entirety, has been discussed at bar, we deem it proper to say, as perhaps tending to limit litigation, that, as at present advised, we think the Circuit Court, sitting at law, may properly dispose of this whole matter by simply directing an entry of satisfaction of the judgment in question, upon such terms (if any) as, after hearing, it shall impose, respecting "interest * * * since date of verdict." But at present we decide only that the decree for a preliminary injunction shall be reversed, and that the cause shall be remanded with direction to dismiss the bill.

It is so ordered.

NOTE.

Bill of Complaint.

In the Circuit Court of the United States for the Western District of Pennsylvania, Sitting in Equity.

No. May Term, 1907.

Between the United States of America, Plaintiff, and Nathaniel G. Macrum, Trustee for Nathaniel G. Macrum, Edward A. Macrum, and William Macrum, Individually and Attorney in Fact, Defendants.

* * * * * * * * * *

6. That afterwards, to wit, on or before the 28th day of August, 1906, your orator notified William Macrum, Esq., one of the defendants, and attorney

Digitized by Google

at law and in fact for all the parties in interest, that it was ready to pay the judgment and interest in said case on proper acknowledgment of satisfaction and payment.

7. That in pursuance thereof, your orator through M. C. Gay, of the United States Engineer's office, agent for your orator, the defendant in said proceedings, paid to the said William Macrum, as attorney aforesaid, the sum of seventeen thousand five hundred twenty-six and $^{04}/_{100}$ ($17,526.04) dollars, and received from him a receipt therefor, a copy of which is hereto attached and made part hereof, marked "Exhibit A," and the said Macrum also entered on the record of the case the following acknowledgment of payment:

I, William Macrum, attorney in fact, for myself and as attorney in fact for Nathaniel G. Macrum, Trustee, Nathaniel G. Macrum, Edward A. Macrum, plaintiffs in the above-entitled case, by virtue of the power of attorney heretofore filed, do hereby acknowledge payment from the United States of $17,526.04, said amount being the verdict with interest included to the date of verdict, subject to claim made in protest for interest on said amount since date of verdict. William Macrum, Atty. In Fact.

August 28/06.

Attest H. R. Gamble.

8. Your orator avers that, at the time said money was paid and said receipt taken, it was fully stated and understood between the said Macrum, attorney as aforesaid, and the agent of your orator, that the payment of said sum of seventeen thousand and five hundred and twenty-six $^{04}/_{100}$ ($17,526.04) dollars was in full payment and satisfaction of all matters in controversy between the said plaintiff and defendant, except that said attorney for plaintiff contended that plaintiff was entitled to interest to the date of payment, to wit. August 28, 1906, instead of May 16, 1906, the date of the rendition of the verdict, as claimed by defendant, and said attorney excepted said claim from said acknowledgment, as shown by said receipt above set forth. And your orator further saith that it was fully intended and understood between the attorney for the plaintiff and the attorney for the defendant at the time the acknowledgment of payment was entered of record by the plaintiff's attorney that said acknowledgment was a receipt and a release to the defendant of all matters in controversy between said plaintiff and defendant, excepting only plaintiff's claim for interest as aforesaid, and your orator avers that if said acknowledgment on the record is not in law a sufficient acknowledgment of payment and release by plaintiff to defendant of all matters in controversy, excepting plaintiff's claim for interest as aforesaid, that it was omitted from said acknowledgment by accident or mistake, as it was fully intended and understood by the parties thereto at the time of making said acknowledgment that it was in fact a full receipt for payment and a release of all matters in controversy excepting the claim of interest as aforesaid.

9. That your orator refers to and makes part of this bill of complaint the record and proceedings thereon of said suit at No. 69, May term, 1904, of your honorable court above mentioned.

10. That, notwithstanding the payment of said money to said plaintiff and the receipt and acknowledgment therefor by plaintiff, the said plaintiff, for the purpose of harassing, annoying, and injuring your orator, threatens to review said proceedings by appeal or writ of error, and to retain meanwhile the money paid by your orator as aforesaid in payment and satisfaction of said verdict, interest, and costs.

11. That your orator has no plain, adequate, and complete remedy at law in the premises, and therefore needs equitable relief. It therefore prays your honors:

I. To enter a decree that the payment by the defendant to the plaintiff of the sum of seventeen thousand five hundred and twenty-six and $^{04}/_{100}$ ($17,526.04) dollars on the 28th day of August, 1906, the amount of the verdict and interest to date of rendition, was, in law, payment and satisfaction in full of all matters in controversy between the said plaintiff and defendant.

II. Or, that the payment by the defendant to plaintiff of the sum of seventeen thousand five hundred and twenty-six and $^{04}/_{100}$ ($17,526.04) dollars on

Digitized by Google

the date above mentioned, being the amount of verdict and interest to date of rendition of said verdict, was, in law, payment and satisfaction in full of all matters in controversy between plaintiff and defendant, with the exception of plaintiff's claim for interest to date of payment, to wit, interest to the 28th day of August, 1906, in place of interest to the 16th day of May, 1906.

III. That the court determine and enter a decree in accordance therewith whether or not the defendant's claim for interest to date of payment, to wit, August 26, 1906, is legal and just, and, if the court so determine, then to enter a decree that, on payment of said amount of interest so found to be due, the plaintiff shall enter upon the record of said suit acknowledgment of payment and satisfaction in full. If, however, the court determine that plaintiff's claim for interest is without warrant of law, then to enter a decree that the plaintiff shall enter acknowledgment on the record of payment and satisfaction in full.

IV. That the defendant be restrained by preliminary injunction from appealing said suit or suing out a writ of error or other process to review said suit or to proceed thereon until the further order of court.

V. That after final hearing the court enter a decree restraining the defendants from appealing said suit or suing out a writ of error or other process to review said suit, or to proceed therein until the said plaintiff pays back to defendant, your orator, the sum of seventeen thousand five hundred and twenty-six and $^{04}/_{100}$ dollars, with interest thereon to date of restoration.

VI. That the court grant such other and further relief as justice and equity require in the premises.

VII. That your orator be hence dismissed with his costs in this behalf lost wrongfully sustained.

United States of America,
By John W. Dunkle, U. S. Attorney.

John W. Dunkle, Sol. for Plff.

June 3, 1907.

Western District of Pennsylvania—ss.:

Before me, the undersigned authority, came John W. Dunkle, United States attorney for the Western District of Pennsylvania, who, being by me duly sworn according to law, doth depose and say, that the statement of facts so far as they are personally known to affiant are true and correct as above set forth, and so far as they are stated on information and belief he verily believes them to be true as above set forth. Jno. W. Dunkle.

Sworn to and subscribed this 3rd day of January, 1906.

H. D. Gamble,
Clerk U. S. C. Court.

Amendment to Bill.

And now, to wit, January 3, 1907, comes the plaintiff by its attorney, and by leave of court first had files the following additional or supplemental prayer for relief to the bill of complaint filed in the above-entitled case, to wit, that the court enter a decree that the defendant repay to plaintiff the sum of seventeen thousand five hundred and twenty-six $^{04}/_{100}$ dollars, with interest thereon, from August 28, 1906, to the date of repayment.

United States of America,
By John W. Dunkle, U. S. Attorney.

Decree.

And now, to wit, January 3, 1907, this cause came on to be heard upon bill of complaint and affidavits of M. C. Gay and N. S. Williams, submitted therewith, and was duly argued by counsel for the respective parties, and on due consideration thereof the court orders, adjudges and decrees that a preliminary injunction forthwith issue, restraining the said defendants, their attorneys or agents, from appealing or suing out a writ of error or other process to review certain proceedings entered at No. 69, May term, 1904, of this court; said injunction to remain in force until the further order of this court.

Digitized by Google

(154 Fed. 545.)

ÆTNA INDEMNITY CO. v. J. R. CROWE COAL & MINING CO.

(Circuit Court of Appeals, Eighth Circuit. April 27, 1907.)

No. 2,354.

1. INSURANCE—EMPLOYER'S LIABILITY BOND—SIGNATURE OF SERVANT.

Where the execution by a servant of an employer's liability bond was not made a consideration for nor a condition of the creation of liability by the insurer, but the latter thereafter continued the bond, which was not signed by the servant, three times for a further new consideration, subject to the conditions and covenants of the bond, defendant was not entitled to object that it was not liable on the last renewal, because the bond was not originally signed by the servant as contemplated.

[Ed. Note.—For cases in point, see Cent. Dig. vol. 28, Insurance, § 1041.

Guaranty insurance, see note to American Credit Indemnity Co. v. Wood, 19 C. C. A. 271.]

2. SAME—NOTICE.

An employer's liability bond provided that the insurer should indemnify the employer against fraudulent or dishonest acts of the employé amounting to embezzlement or larceny, subject to the condition that the insurer should be notified in writing of any fraudulent or dishonest act on the part of the employé which might involve a loss for which the company was responsible, immediately after the occurrence of such act should have come to the employer's knowledge. *Held*, that the notice required was one which would charge the employé with the commission of a felony, and hence the employer was not bound to give such notice until it had acquired knowledge sufficient to justify a reasonable man in making such a charge.

3. SAME—EVIDENCE.

In an action on an employer's liability bond, evidence *held* to sustain a finding that plaintiff gave immediate notice of the employé's default, after acquiring knowledge that such default amounted to the crime of embezzlement or larceny, against which the bond only granted indemnity.

4. SAME—RENEWAL—CONTRACT—REPRESENTATIONS.

An original employer's liability bond was issued in 1901, insuring plaintiff against the employé's misconduct for a year. It was renewed for a new consideration for the succeeding year, and again for the years 1903 and 1904; the renewal reciting that it was made in consideration of $20 premium, and continued the bond in force to June 1, 1904, "subject to all the covenants and conditions thereof." *Held*, that the renewal did not include a statement issued February 24, 1903, in which plaintiff represented that checks signed by the insured employé should be safeguarded by certain other signatures, so that a failure to perform such representation did not relieve defendant from liability on the bond.

5. SAME—CORRESPONDENCE—CONSTRUCTION.

Where there is doubt and uncertainty concerning the effect of correspondence on an employer's liability bond, such doubt should be resolved in favor of sustaining the contract as executed in favor of the insured.

[Ed. Note.—For cases in point, see Cent. Dig. vol. 28, Insurance, § 295.]

6. SAME—NATURE OF CONTRACT.

An employer's liability bond is essentially a contract of indemnity against loss, governed by the rules applicable to ordinary life and fire insurance policies.

7. SAME—APPLICATION FOR INSURANCE—ACCEPTANCE.

An application for insurance is a proposition to the insurance company which must be accepted as made, if at all.

[Ed. Note.—For cases in point, see Cent. Dig. vol. 28, Insurance, §§ 196, 198.]

Digitized by Google

8. SAME—ACTION ON POLICY—TRIAL—INSTRUCTIONS—CONSTRUCTION.

In an action on an employer's liability bond, the court charged that the employer's statement, made by plaintiff and pleaded by defendant as being the basis and part of the contract, was confessed by the pleadings and admitted to have been executed and delivered to plaintiff by defendant. *Held*, that such instruction should be construed to mean that plaintiff admitted only that the statement was executed and delivered for some purpose, and not that it was the basis of the contract.

9. PLEADING—REPLY—FAILURE TO VERIFY—EFFECT.

Rev. St. Mo. 1899, § 746 [Ann. St. 1906, p. 731], provides that, when any petition or other pleading shall be founded on any instrument of writing charged to have been executed by the other party, the execution of the instrument shall be adjudged confessed, unless the party charged to have executed the same denies its execution by verified answer or replication. *Held*, that where a verified answer pleaded that a written instrument had been made by plaintiff to defendant, and was the basis of an employer's liability bond sued on, plaintiff's failure to verify its replication of general denial only admitted the execution and delivery of such instrument, and was sufficient to join issue on the question whether the statement was the basis of the contract.

10. WRIT OF ERROR—PRESUMPTIONS—VERDICT.

Where the record on a writ of error does not clearly show that the jury's finding was contrary to the instructions of the court when taken as a whole, it will be presumed that the jury followed the instructions, and that the verdict is right.

[Ed. Note.—For cases in point, see Cent. Dig. vol. 3, Appeal and Error, § 3757.]

11. SAME—ASSIGNMENT OF ERRORS—INCORPORATION IN BRIEF.

Under Circuit Court of Appeals rule 24 (150 Fed. ii), declaring that the brief for the plaintiff in error shall contain a specification of the errors relied on, and shall set out separately and particularly each error asserted and intended to be urged, an objection that a false or misleading issue had been tried to the prejudice of plaintiff in error could not be reviewed, where no such error was so assigned.

[Ed. Note.—For cases in point, see Cent. Dig. vol. 3, Appeal and Error, § 3094.]

12. SAME—RIGHT TO ALLEGE ERROR.

Where the trial of an alleged false issue was induced by defendant's own procurement, over plaintiff's objection, defendant could not object thereto on a writ of error.

[Ed. Note.—For cases in point, see Cent. Dig. vol. 3, Appeal and Error, §§ 3591, 3593.]

13. SAME—PREJUDICE.

Where a judgment was for the right party and in the interest of substantial justice, it will not be reversed on a writ of error because the court proceeded on an erroneous theory.

[Ed. Note.—For cases in point, see Cent. Dig. vol. 3, Appeal and Error, § 4034.]

14. SAME—SCOPE OF REVIEW—DAMAGES—EXCESSIVENESS.

Where a verdict returned in the federal court has been allowed to stand by the trial judge, it cannot be set aside on appeal as excessive.

[Ed. Note.—For cases in point, see Cent. Dig. vol. 3, Appeal and Error, § 3948.]

15. SAME—INSTRUCTIONS.

Where, in an action on a fidelity bond, the court gave an instruction with reference to the allowance of a credit in favor of defendant, whether the verdict contravened such instruction was reviewable on a writ of error.

Digitized by Google

16. SAME—PREJUDICE.

Where, in an action on a fidelity bond, the verdict returned was in strict accord with the proof touching the amount of the employé's embezzlement, and under no theory was defendant entitled to a credit which the jury disallowed, defendant was not entitled to a reversal because the disallowance of such credit was contrary to an ambiguous instruction with reference thereto.

[Ed. Note.—For cases in point, see Cent. Dig. vol. 3, Appeal and Error, § 4231.]

Sanborn, Circuit Judge, dissenting.

In Error to the Circuit Court of the United States for the Western District of Missouri.

W. B. Homer (Botsford, Deatherage & Young, on the brief), for plaintiff in error.

W. F. Guthrie (Boyle, Guthrie & Smith, on the brief), for defendant in error.

Before SANBORN, HOOK, and ADAMS, Circuit Judges.

ADAMS, Circuit Judge. The mining company brought its action against the indemnity company to recover on a contract whereby the latter undertook to indemnify the former to the extent of $5,000 against loss which might be occasioned by embezzlement or larceny of its funds by David C. Graves, its bookkeeper and cashier, during the year beginning June 1, 1903, and ending June 1, 1904. The defendant agreed to indemnify against "fraudulent or dishonest acts" of Graves "amounting to embezzlement or larceny," subject, however, to a condition in the following words:

That it "shall be notified in writing, * * * of any fraudulent or dishonest act on the part of the employee, which may involve a loss for which the company is responsible hereunder, immediately after the occurrence of such act shall have come to the knowledge of the employer."

An embezzlement amounting to some $7,000 occurred while the contract was in force, and a preliminary notice of its possibility was given the defendant on May 28, 1904, and a final notice of its actual occurrence was given June 24, 1904. After refusal by defendant to reimburse the plaintiff to the extent of $5,000, this suit was instituted in the Circuit Court, and resulted in a judgment for $4,409.23; that being the amount of embezzlement found to have occurred during the year covered by the contract. On this writ of error taken by defendant the proceedings below are challenged (1) because the contract was not signed by Graves, (2) because immediate notice of loss was not given, (3) because of breach of warranties made in the statement upon the faith of which the contract was made, (4) because the verdict was excessive and contrary to the court's instructions, (5) because erroneous instructions were given to the jury.

Did the failure of Graves to sign the contract invalidate it?

It seems to have been originally prepared with the intention of having him sign it, but for some unexplained reason it was not done. While the contract is denominated a bond, it has few, if any, of the characteristics of a bond. It is essentially a contract of indemnity. Graves was mentioned in it, nor as principal, but as an independ-

Digitized by Google

ent party. No reference was made to him in the body of the instrument, except in one clause, which is to the effect that Graves will save the indemnity company harmless from any loss or damage it might sustain. Two separate and distinct contracts between different parties appear to have been contemplated; one between plaintiff and the indemnity company, consisting of a contract of indemnity, and the other between Graves and the indemnity company, consisting of a contract of guaranty. In the former, Graves was not concerned; in the latter, plaintiff was not concerned. The execution of the contract by Graves is, in terms, made neither a consideration for nor condition of the creation of liability by the indemnity company. The bare fact that these separable contracts were possibly originally intended to be incorporated in one writing does not render them any the less separable and distinct in their nature and purpose.

Moreover, if there were any doubt on this subject, defendant subsequently adopted the instrument, as it was actually signed, as the contract between itself and plaintiff. The instrument sued on was a renewal of that contract. The latter was made June 14, 1901, and insured the plaintiff against the misconduct of Graves for the period of one year from June 1, 1901, to June 1, 1902. After the year had expired, an obligation for a new consideration paid by plaintiff was executed by defendant extending the insurance so as to cover the year ending June 1, 1903. A like extension followed covering the year ending June 1, 1904. During this latter period the embezzlement in question occurred. These different extensions were all based upon and recognized the original contract of June 14, 1901, known and numbered by the defendant as bond F. 1,774. The last renewal bore date June 30, 1903, and reads as follows:

"In consideration of the payment of the sum of $20.00, being the premium for the third year upon bond F. 1,774 of the Ætna Indemnity Company for $5,000, * * * said bond is hereby continued in force until June 1, 1904, subject to all the conditions and covenants thereof."

These renewals, executed for valuable consideration received and appropriated by defendant, clearly affirm the original contract notwithstanding the absence of Graves' signature and estop it from asserting its invalidity when repeatedly so affirmed by it.

Was immediate notice of loss, within the meaning of the contract, given to defendant? This question is presented on an exception taken to the action of the trial court in refusing to instruct the jury to return a verdict for defendant. Our consideration is therefore limited to an inquiry whether there was any substantial evidence before the jury tending to show that the required notice was given.

The contract of indemnity obligated defendant to reimburse plaintiff for the pecuniary loss it might sustain by reason of fraudulent or dishonest acts of Graves amounting to embezzlement or larceny. The notice required to be given was, in the language of the contract, "of any fraudulent or dishonest act of Graves involving a loss for which the company is responsible"; that is, a loss arising out of embezzlement or larceny by the employé. This notice was required to be given, not immediately after any fraudulent or dishonest act

Digitized by Google

amounting to embezzlement should be committed, but only "immediately after the occurrence of such act shall have come to the knowledge of the employer." From this analysis of the contract it appears that the notice required was one that would charge the employé with the commission of a felony, and was required to be given only after knowledge should have come to the employer of the commission of such offense.

In the case of Fidelity & Deposit Co. v. Courtney, 186 U. S. 342, 22 Sup. Ct. 833, 46 L. Ed. 1193, an indemnity contract much like the one now before us, requiring "immediate notice," of a default, was under consideration, and it was held that a notice given "with due diligence under the circumstances of the case, and without unnecessary or unreasonable delay," would answer the requirement of the contract; that "immediate notice" is given when it is reasonably immediate.

In American Surety Co. v. Pauly, 170 U. S. 133, 145, 18 Sup. Ct. 552, 557, 42 L. Ed. 977, the Supreme Court, in considering the knowledge required to move an employer to give a notice like that required in this case, approved an instruction given by the trial court in the following words:

"And in considering this issue you are to inquire, first, when it was that the plaintiff became satisfied that the cashier had committed dishonest or fraudulent acts which might render the defendant liable under this policy. He may have had suspicions of irregularities. He may have had suspicions of fraud. But he was not bound to act until he had acquired knowledge of some specific fraudulent or dishonest act which might involve the defendant in liability for misconduct."

And in doing so observed as follows:

"It may well be held that the surety company did not intend to require written notice of any action upon the part of the cashier that might involve loss, unless the bank had knowledge, not simply suspicion, of the existence of such facts as would justify a careful and prudent man in charging another with fraud or dishonesty. If the company intended that the bank should inform it of mere rumors or suspicions, * * * such intentions ought to have been clearly expressed in the bond."

These authorities place a reasonable and practical construction upon contracts of the kind in question, one under which the rights of both parties are fairly respected and protected. The serious effect of making a criminal charge upon the character, business, social standing, and future prospects of an employé, as well as a proper appreciation of the personal responsibility assumed in making a false charge by an employer, reasonably call for great circumspection and caution in making it. Immediate notice—that is, literally speaking, instantaneous notice—is not required to be given, but only such notice as reasonable diligence, under all the circumstances of the case, dictates after knowledge of facts requiring it is obtained. And this is not required to be given on mere rumor of irregularities or suspicion of dishonesty; neither is absolute or complete knowledge of an accomplished crime necessary before the employer is required to act, but only such knowledge of facts as would justify a careful and prudent man in believing a crime to have been committed.

Digitized by Google

We are accordingly brought to a consideration of the question whether there is any substantial evidence in the record tending to show that plaintiff gave "immediate notice," as just defined, after it had acquired "knowledge," as just defined, of any dishonest acts of its employé amounting to embezzlement or larceny.

A general consideration of the evidence will suffice to answer the question. Graves had been a trusted employé of plaintiff for five or six years; had during those years been advanced on his merits from the position of bookkeeper to that of secretary and cashier. He handled from $50,000 to $80,000 per month. Until the events next referred to occurred, no suspicion had befallen him. On April 22, 1904, plaintiff employed an expert bookkeeper for the purpose of revising and improving its system of bookkeeping. This expert immediately entered upon the discharge of his general task and soon discovered that there was a discrepancy of $212.47 between the cashbook and the cash in the cashier's possession. On the following day Graves was advised of this discrepancy, admitted its correctness, and gave some plausible explanation of it. The expert testified, in substance, that he was satisfied on April 23d that there was a shortage in Graves' accounts and irregularities in his bookkeeping, and that there was great room for improvement in the system. He gave out no specific information about the amount of delinquency because, as he says, he could not produce evidence, and was not prepared to make any absolute statement of the facts. He defines what he meant by the word "shortage" by saying:

"I just mean this: That according to his own figures as he had them, and as his books according to his system showed, he had a discrepancy of $212.47."

The above are the substantial facts concerning the discovery made on April 23d, the date from which defendant claims immediate notice should be calculated; but the expert was permitted to draw deductions, not only from the facts, but from the appearance of Graves at the time. He testified that Graves seemed to be in trouble. That:

"If a man is laboring under a great strain, and feels that he is about to be discovered in criminal acts, he will certainly show some evidence of fear, and will show concern, and this is what Mr. Graves showed—very considerable concern."

He further testified that Graves appeared to droop and complained of feeling sick. It was from such nebulous and unsubstantial data as this that the expert was made on cross-examination to draw the deduction that he believed as early as April 23d that there was a defalcation; and it is on this general kind of evidence we are asked to hold that plaintiff had such knowledge of the commission of the crime of embezzlement by Graves as required it "immediately" after April 23d to give the preliminary notice to defendant.

This evidence seems to us to amount to nothing more than ground for a suspicion or general distrust, and certainly does not necessarily warrant the conclusion under the authorities already cited that plaintiff, whose officers co-operated with the expert, then had that kind of knowledge of the commission of the crime of embezzlement as would justify it in making a charge of that kind and require it im-

Digitized by Google

mediately thereafter to give the preliminary notice. All the evidence concerning the discovery made by the expert on the first day of his service is subject to inferences of different kinds, and we cannot say that they were consistent alone with the guilt of Graves. Many a bookkeeper, without doubt, has made mistakes, been short in his cash, confused in his accounts, and shown anxiety and distress over them, without having committed the crime of embezzlement. It is certain, we think, that all reasonable men, in the exercise of an honest and impartial judgment, would not have concluded from the facts as disclosed by this record, with all the reasonable inferences deducible from them, that plaintiff knew on April 23d that Graves had committed the crime of embezzlement or larceny, and therefore we cannot hold that for want of notice of loss to defendant immediately thereafter recovery is precluded.

On April 23d the expert commenced and prosecuted a thorough investigation into Graves' accounts. The latter had adopted ingenious devices for covering his defalcations. More money had been charged to expenses than ought to have been, less money had been credited to customers and deposited in the bank than ought to have been, and the books of the plaintiff had been doctored in one way or another to meet the necessities of the situation. The handling of $50,000 to $80,000 per month by Graves afforded temptation and opportunity alike. The expert was required to disentangle these accounts, and in so doing to investigate the actual transactions, between defendant and divers persons, out of which the accounts sprung. He, in connection with plaintiff's officers, devoted himself assiduously to this task until May 28th, when plaintiff first notified defendant that an examination of the accounts was being made, and that "there appeared to be every evidence that there would be a shortage," which it would call upon defendant to pay under its renewal bond F. 1,774. The examination proceeded until June 24, 1904, when, the expert testified, he was first certain he had arrived at the truth. On that date plaintiff wrote defendant as follows:

"With further reference to my letter of May 28th and our conversation of June 8th, in regard to probable shortage of D. C. Graves, our former bookkeeper and cashier, the accountant who has been checking our books has made report to-day, and the total deficit is $7,121.25. We will claim protection under bond F. 1,774, which was issued June 1, 1901, and renewed, your No. 3,571, dated June 30, 1903. If representative of your company wants to verify our investigation, we have everything in shape so that he can do so."

Thereafter, defendant wrote plaintiff as follows:

"We beg to acknowledge receipt of your favors of the 24th inst. and of the 28th ult. addressed to Mr. T. H. Mastin, Jr., Kansas City, Mo., in reference to above bond [bond F. 1,774]. We have to state that the information contained in said letter is not sufficient to establish a claim under our bond. Therefore we beg to notify you that we shall reserve all our rights in the premises. Kindly forward to us at once for our information a verified statement setting forth the dates and amounts of each item of the alleged deficit and full particulars regarding same."

After receipt of the last letter plaintiff proceeded at much expense and trouble, occupying the time of a paid expert for two months, to prepare and send to defendant the information requested in its last

Digitized by Google

letter. This correspondence strongly suggests a waiver of any imperfect notice, if such had occurred; but we find no occasion to resort to that doctrine. The foregoing letters clearly indicate by their silence on the subject of notice that defendant had received all the notice required. No complaint concerning it is found; but in defendant's last letter it is strongly suggested that plaintiff had not made sufficient research into the accounts to give defendant such information as it required to determine its liability.

As we understand the argument of defendant's counsel, they place their reliance upon the evidence, disclosing plaintiff's knowledge, as early as April 23d, of facts which required it "immediately" thereafter to give the notice; and contend that, because no notice was given until the preliminary notice of May 28th and the final one of June 24th, it conclusively appeared that no immediate notice was given as required by the contract. We have already discussed and disposed of that contention, and our conclusion is only reinforced by the conduct of the parties after April 24th, as just detailed. From all the evidence we are clearly of opinion that the trial court committed no error in refusing to instruct a verdict for defendant on the ground that no immediate notice of loss was given to defendant.

The cases of National Surety Co. v. Long, 60 C. C. A. 623, 125 Fed. 887, and United States Fidelity Co. v. Rice, 78 C. C. A. 164, 148 Fed. 206, relied on by defendant, have no application to facts such as are disclosed by this record. In those cases notice was required to be given immediately after the occurrence of such a single definite and easily ascertained fact as readily permitted the court to fix the time when notice was required under the contract. In this case, on the contrary, so many elements of law and fact enter into a consideration of the time when notice was required as renders the determination thereof peculiarly appropriate for the jury.

Was there such a breach of warranty of failure to perform conditions on which the contract of indemnity was issued as precluded a recovery in this case?

Some time before February 24, 1903, defendant submitted to plaintiff a blank form of a statement, consisting of questions, with spaces left for the insertion of answers thereto, with the request that plaintiff fill in the appropriate answers and sign the statement. This document, so far as our present purpose requires, is as follows:

"Employer's statement covering application made by David C. Graves, of Kansas City, Mo., to the Ætna Indemnity Company, Hartford, Conn., for an indemnity bond in the position of cashier and bookkeeper under the service of the undersigned employer. In order that the above application may be passed upon at once, please answer fully all the following questions in so far as they apply to the given case and return at your early convenience. [Signed] E. S. Pegram, Secretary" [of defendant company].

"(1) Amount of bond? $5,000.

"To date from? February 1st, 1903, to February 15th, 1904.

"(2) To whom payable? Give exact title. The J. R. Crowe Coal & Mining Co. * * *

"(14) Will he be authorized to sign checks on your behalf? Yes.

"Will there be any countersignatures on such checks? If so, whose? General managers or presidents."

Digitized by Google

After answering many other questions which were propounded, the statement concluded with the following words:

"It is hereby agreed by the undersigned that the above answers are to be taken as conditions precedent to and as the basis of execution of the said indemnity bond and in consideration of the issuance of said indemnity bond by the company; it is further agreed that the checks and supervision above described shall be observed.

"[Signed] J. R. Crowe Coal & Mining Co."

Defendant averred in its answer that the contract sued on was made in reliance upon the statement of February 24th so made by the plaintiff, and that thereby plaintiff, among other things, warranted that Graves should not sign checks without the countersignature of either the general manager or president of plaintiff company, and that the plaintiff breached its warranty by subsequently, during the year covered by the contract, permitting Graves to sign checks without the safeguards agreed upon and warranted to be enforced.

For the purposes of the present discussion, we may assume that proof was offered and given tending to establish, among other things, that Graves was permitted to sign checks without any countersignature. The trial court, at the request of defendant, refused to instruct the jury that the answers contained in the statement of February 24th were warranties, and that if any of them was not true in fact the contract sued on was void, and refused on like request to instruct that, if checks were permitted to be signed by Graves without countersignatures of the general manager or president, the contract was avoided, and errors are duly assigned on the court's action.

Without referring to other breaches of warranty relied on by defendant, founded on the statement, the foregoing is deemed sufficient to fairly present the legal proposition involved.

Counsel for plaintiff contend that there is no sufficient evidence showing, or tending to show, that the renewal contract sued on was executed by defendant or accepted by plaintiff on the faith of the statement of February 24th, and therefore that no breach of any warranty contained in the statement, and no failures to perform any of its promises, can affect plaintiff's right of recovery in this case.

The contract sued on makes no reference to the statement of February 24th. It reads as follows:

"Hartford, Conn., June 30, 1903.

"In consideration of the payment of the sum of $20.00, being the premium for the third year upon bond F. 1,774 of the Ætna Indemnity Company for $5,000 issued June 1, 1901 on behalf of David C. Graves in favor of the J. R. Crowe Coal & Mining Company, Kansas City, Mo., said bond is hereby continued in force to June 1, 1904, subject to all the covenants and conditions thereof. * * *

"[Signed] Charles Lindley, President.
"E. S. Pegram, Secretary."

The plain and unambiguous language of the contract just quoted shows that what the parties apparently did was to continue in force for a third year the original contract known as bond F. 1,774 "subject to all the covenants and conditions thereof," and, by fair and reasonable intendment, not subject to the terms and conditions of any

Digitized by Google

other instrument. The original bond 1,774 was a lengthy instrument containing many terms, covenants, and stipulations of the parties and filled with many conditions of defeasance of one kind or another. To all those terms, covenants, stipulations, and conditions the plaintiff clearly became bound, and any violation of any of them might ipso facto have defeated recovery on the contract as written. In the face of such affirmative reference to the terms and conditions of one instrument, and in the light of the accepted maxim "expressio unius exclusio alterius," it requires very clear proof that the parties intended to contract with reference to any other instrument containing other terms or conditions.

Turning now to the statement of February 24th, we perceive nothing in the terms employed or in any implications suggested to indicate an intention to make the statement the basis of or consideration for any renewal of the old bond. The request by defendant's secretary to answer the questions propounded found at the beginning of the statement was made in connection with the representation that Graves had just made an application to defendant for an indemnity bond which required immediate action by defendant. The general scheme of the statement and the language used indicate that the bond contemplated was a new one, just applied for by Graves, and one which should be dated February 1, 1903, and should run to February 15, 1904. By the last clause of the statement the answers made by the plaintiff were agreed to be taken as conditions precedent to and as the basis of execution of said indemnity bond; that is, the bond to run from February 1, 1903, to February 15, 1904. No intimation can be found indicating in the slightest degree that the parties intended the answers to the questions to be conditions precedent to or to form the basis of the execution of any other bond whatsoever, and certainly not of the renewal bond F. 1,774. The application and statement of February 24th seem to have been intended for the purpose of originating a new contract—certainly some contract other than the renewal of the old one of 1901. The parties were competent to contract and had it in their power either to renew the old or make a new contract. They determined to renew the old one, because they did it; and the application of Graves for a new one to date February 1, 1903, and running to February 15, 1904, was not accepted, because no such contract as that application contemplated was ever made. Accordingly, the agreement found at the end of the statement making the answers to questions propounded in it warranties or conditions precedent to the validity of the bond has no application to this case.

Parties have an undoubted right to make their own contracts, and, when they are reduced to writing in plain and unambiguous language, they must stand as written and be enforced accordingly. It does not follow that, because plaintiff proposed to defendant, or was willing to make the truth of certain statements a condition precedent to liability on one proposed contract, it intended to make those statements conditions of liability, if some other and different contract should be afterwards made by the parties.

Digitized by Google

But it is contended that, outside of the language employed by the parties in the written instrument, they agreed by correspondence that the warranties contained in the statement of February 24th should be conditions precedent to the validity of the contract renewing the old bond F. 1,774. We find no such agreement in any correspondence passing between defendant and plaintiff. Many letters passed between defendant and its local agents in Kansas City about the advisability of having an employer's statement different from that obtained from plaintiff prior to the execution of the original contract and of the necessity of having a different statement made before any further renewals should be granted. An effort was made to so connect the local agents with plaintiff as to raise a presumption that it must have known and assented to defendant's requirements, but such knowledge and consent was not in our opinion established.

If there is doubt and uncertainty about the effect of the correspondence upon the contract, they should, on familiar principles, be resolved in favor of sustaining the contract as made and signed, and not of defeating it; in favor of the insured, rather than the insurer. National Bank v. Insurance Co., 95 U. S. 673, 678, 24 L. Ed. 563; Grace v. American Central Ins. Co., 109 U. S. 278, 282, 3 Sup. Ct. 207, 27 L. Ed. 932; Moulor v. American Life Ins. Co., 111 U. S. 335, 341, 4 Sup. Ct. 466, 28 L. Ed. 447; London Assurance v. Companhia De Moagens, 167 U. S. 149, 159, 17 Sup. Ct. 785, 42 L. Ed. 113; Liverpool, etc., Ins. Co. v. Kearney, 180 U. S. 132, 136, 21 Sup. Ct. 326, 45 L. Ed. 460; McMaster v. New York Life Ins. Co., 183 U. S. 25, 40, 22 Sup. Ct. 10, 46 L. Ed. 64; Royal Ins. Co. v. Martin, 192 U. S. 149, 162, 24 Sup. Ct. 247, 48 L. Ed. 385; Bankers' Mutual Ins. Co. v. State Bank of Goffs, 80 C. C. A. 32, 150 Fed. 78.

Without dwelling on the improbability of rational and experienced business men making a contract ignoring the language of the statement of February 24th, and expressly making it subject to the covenants and conditions of some other instrument, if they had in fact agreed that the contract should be subject to the conditions of that statement, a brief reference to certain undisputed proof and applicatory law will on other well-established principles dispose of this case. In December, 1902, when negotiations were in progress looking toward an extension of bond F. 1,774 for the second year, which had then partially expired, defendant wrote its local agents in Kansas City informing them that the employer's statement on which the original bond was based was not the proper one, and inclosed a blank form on which the statement of February 24th was subsequently written, to be filled out by plaintiff. The blank contained no reference to the original contract. It was left to plaintiff to fill it out as it desired. Accordingly, it filled it out as already seen, with no reference to the original contract, but with particular reference to a proposed bond. It amounted to a proposition to defendant, in effect, that if it would issue a new bond on Graves' pending application to date February 1, 1903, and to run to February 15, 1904, it would agree to perform certain conditions, and that the performance thereof should be a condition precedent to its validity. This proposition was forwarded to the home office of the defendant in New York and received there on the 2d day of March, following.

Digitized by Google

Some correspondence ensued between the defendant and its local agents in Kansas City, not shown to have been communicated to plaintiff. After which, defendant, regardless of the terms of plaintiff's proposition, returned to its agents, to be delivered to plaintiff, a renewal of the original bond insuring it against Graves' defalcations from June 1, 1902, to June 1, 1903.

After that renewal expired, without any further negotiations, and without making any reference to the proposition of February 24th, it executed its second renewal of the old bond, subjecting plaintiff, not to the covenants and conditions of the application and statement of February 24th, but to the terms and conditions of the old bond.

The contract sued on is essentially a contract of indemnity against loss, and the general rules governing the construction of ordinary life and fire insurance policies are applicable to it. Jackson v. Fidelity & C. Co., 21 C. C. A. 394, 75 Fed. 359, 365; Guarantee Co. v. Mechanics' Savings Bank, 26 C. C. A. 146, 80 Fed. 766; Champion, etc., Co. v. American Bonding & Trust Co., 115 Ky. 863, 872, 75 S. W. 197, 103 Am. St. Rep. 356; American Surety Co. v. Pauly, supra. The statement of February 24th was obviously made to secure favorable action on Graves' pending application, and in effect formed a part of it.

It is well settled that an application for insurance is a proposition to the insurance company which must be accepted as made, if at all. If a policy is executed and offered to the applicant different in any material respects from the application, it is in effect a rejection of the application, and a new proposition by the company, which the applicant may accept or reject at his pleasure. Insurance Co. v. Young's Administrator, 23 Wall. 85, 23 L. Ed. 152; Minneapolis, etc., Ry. Co. v. Columbus Rolling Mill, 119 U. S. 149, 7 Sup. Ct. 168, 30 L. Ed. 376; McNicol v. New York Life Ins. Co., 79 C. C. A. 11, 149 Fed. 141.

From the foregoing, as well as from a consideration of all the evidence, which has been critically examined, it is clearly apparent, we think, that defendant never accepted the proposition found in the statement of February 24th, but for reasons satisfactory to itself proposed to renew and to continue the liability created by the original contract. That proposition of defendant was accepted by plaintiff. It paid for and received the renewal contract. A loss occurred under it, and the defendant must be held to respond to its obligations created by it. We think there was no error in refusing to instruct that a failure to observe the conditions of the statement of February 24th entitled defendant to a verdict.

It is suggested that the trial court found as a fact that the statement of February 24th formed a part of the contract sued on. We do not so understand it.

The correspondence between defendant and its local agents at Kansas City, together with some oral testimony attempting to bring it home to plaintiff, was the only means by which defendant claimed to connect that statement with the contract. The contract itself made no reference to it, but did refer to another instrument as its basis. Apart from that correspondence, defendant's counsel neither in argument nor brief claimed that the statement was the foundation of the contract in suit or had any connection with it. All of that correspondence, and

Digitized by Google

the futile attempt to show plaintiff's consent to it, was offered subject to plaintiff's vigorous objection and exception. The court could only have received it subject to the requirement of bringing it home to plaintiff company. At the conclusion of all the evidence, the court obviously thought that no such connection had been made, for in its charge it made use of the following language:

"There was a good deal of correspondence, you will recall, introduced in evidence here between the indemnity company, in the East, and the local agents representing them, in Kansas City. I admitted that correspondence, not that I thought it was binding on the coal company, but I admitted that evidence to show the history and the development of the transaction."

The view of the trial judge so expressed was regarded by the defendant as fatal to its contention. This appears from the exception which it took to the charge in the following language:

"The defendant excepts to that part of the charge of the court in which the court charged the jury that the correspondence between the defendant and its agent in Kansas City was not binding on the plaintiff."

It is true that the court instructed the jury:

"That the employer's statement made by plaintiff dated February 24, 1903, and pleaded by defendant in its answer herein as being the basis and part of the contract of indemnity sued on, stands confessed by the pleadings and is admitted to have been executed and delivered to plaintiff by defendant."

But this is not a declaration that plaintiff admitted that the statement was the basis of the contract, or anything more than that it was executed and delivered for some purpose by it. If it was intended to state any further admission, the meaning of the pleadings was obviously misconceived.

The defendant pleaded as a part of its answer that plaintiff, on February 24, 1903, executed and delivered to it a statement partly in writing and partly in print, and, after setting out the same and the signatures of the parties thereto in full, made the further allegation that, upon the basis and in consideration of the statement so executed, it signed and delivered to plaintiff the contract sued on. The plaintiff for its replication filed a general denial, without verification, of all the allegations of the answer.

Section 746, Rev. St. Mo. 1899 [Ann. St. 1906, p. 731], provides that:

"When any petition or other pleading shall be founded upon any instrument of writing charged to have been executed by the other party, * * * the execution of such instrument shall be adjudged confessed unless the party charged to have executed the same deny the execution thereof by answer or replication verified by affidavit."

The failure of plaintiff to verify its replication justified the court in declaring what the proof unquestionably showed that the execution of the instrument was admitted, but did not justify it in declaring that it was admitted that the statement formed the basis of or constituted a part of the contract sued on, an issue which was the subject of spirited contest throughout the trial. That was an issue tendered separately from the other by the defendant, and one in which plaintiff ef-

Digitized by Google

fectually joined by the unsworn replication. Hart v. Harrison Wire Co., 91 Mo. 414, 421, 4 S. W. 123; Cox v. Bishop, 55 Mo. App. 135.

It is also true that the charge in some of its phases apparently proceeds on the palpably false assumption that, notwithstanding the fact that the correspondence and evidence failed to connect plaintiff with the statement, it and all its warranties and conditions were obligatory on the plaintiff; but it is likewise true, as already pointed out, that the court refused to give defendant's instructions that a breach of any of the warranties or conditions found in the statement would constitute a defense to the action. After a careful reading of the charge as a whole and of the requests refused, we have reached the conclusion that the court did not find, or intend to declare, that the statement of February 24th formed a part of the contract sued on. On the contrary, we reach the opposite conclusion, namely, that the court, by holding that the correspondence failed to bind plaintiff to its contents, and refusing to give defendant's requested instructions, necessarily concluded that the statement of February 24th was not a part of the contract sued on. Moreover, if the statement formed a part of the contract the evidence was clear and undisputed that there were such breaches of its warranties as precluded recovery by plaintiff, and rendered a verdict for defendant inevitable. But the court itself obviously did not think that such result was inevitable, because it permitted a recovery by plaintiff, and after full deliberation denied a motion for a new trial. No court would have granted a new trial quicker for a disregard by the jury of its instructions than the learned court from which this case came. For the foregoing reasons, we think the finding of the jury is not necessarily contrary to the charge. Where the record does not clearly show that the finding is contrary to the instruction of the court when taken as a whole, the presumption is that the jury followed it, and that the verdict is right. Gregory v. Morris, 96 U. S. 619, 24 L. Ed. 740.

It is further suggested that the judgment cannot be affirmed without improperly taking cognizance of errors committed against plaintiff when it has prosecuted no writ of error in its own behalf, and that, if we could do so, the defendant was by the effect of the combined errors deprived of a trial according to the law and evidence, was made to try a false issue, and that other issues in the case were obscured to the prejudice of the defendant by the submission of the false issue and confused instructions concerning it. We cannot appreciate the force of these suggestions because of the condition of the record and charge of the court already considered, and particularly because of the fact that counsel for defendant has assigned no error calling our attention to those features of the trial. It is true a general assignment of error was made, based on the court's refusal to instruct a verdict in favor of the defendant.

But rule 24 of this court provides that the brief of the plaintiff in error "shall contain," among other things, "a specification of the errors relied upon and shall set out separately and particularly each error asserted and intended to be urged." That rule was intended to sharply direct the attention of the court to the vital questions at issue and to require the argument of counsel to be concentrated upon the important questions in controversy. City of Lincoln v. Sun Vapor Street-Light

Digitized by Google

Co., 8 C. C. A. 253, 59 Fed. 756, 758. Counsel for defendant conformed to this rule, and specified the errors which they are now relying upon, and gave several reasons why the peremptory instruction should have been given in its favor, without making any complaint or remotely suggesting that any false or misleading issue had been tried, or that any combination of errors had deprived it of a trial on the law and the evidence, or that any issue had been confused. If the defendant has not yet appreciated that it did not get a lawful trial or was otherwise prejudiced by the proceedings below, we do not deem it our duty to act for it and assign errors in its behalf.

Again, if any false issue was tried below, it was by defendant's own procurement. It offered the correspondence to show an agreement between the parties that the statement of February 24th should form the basis of the contract sued on. That evidence was objected to by plaintiff, and admitted at defendant's insistence, over plaintiff's protest. It signally failed to support defendant's contention, and should have been excluded or ultimately ruled out. The experiment, or false issue, as it is called, was therefore of defendant's own seeking and at plaintiff's great trouble and expense. Defendant, even if it had assigned the trying of such false issue as error, cannot be heard to complain of the consequences of that error because it brought them upon itself.

After a careful and critical consideration of the terms and conditions of the contract as actually executed by defendant company and of all the evidence introduced by defendant to add to or vary those terms and conditions, we cannot, under well-settled law recently stated by this court in Connecticut Fire Ins. Co. v. Buchanan, 73 C. C. A. 111, 141 Fed. 877, 4 L. R. A. (N. S.) 758, reach any other conclusion than that there was no competent evidence to ingraft upon the contract as executed any of the warranties or conditions found in the statement of February 24th. The judgment was in harmony with this conclusion, and at another trial, so far as this issue is concerned, no other judgment could be lawfully rendered. If, therefore, any errors were committed adverse to defendant's contention, or even if the court adopted any erroneous theory, the record conclusively shows that neither of them were or could have been prejudicial to the defendant's real rights. Such should therefore, in the interests of a rational administration of justice, be disregarded.

It was recently held by this court that, even if a trial proceeded on an erroneous theory, if the judgment reached was for the right party, it, in the interests of substantial justice, should not be reversed when it is clear that the erroneous procedure or error did not prejudice, and could not have prejudiced, the rights of the losing party. Cook v. Foley (C. C. A.) 152 Fed. 41.[1] With that reasonable doctrine we fully agree, and we think the present case is brought within its contemplation. We cannot see how the confusion or error, if any such existed in the trial of the issue last referred to, injuriously affected the defendant's chances for a fair trial on the other issues of the case; but if they had any tendency in that direction, and even did prejudicially affect the defendant's rights, it is not complaining about it. No assignment of error to that effect is either made, specified in the brief, or argued by its counsel. In such circumstances we cannot interfere.

[1] 81 C. C. A. 237.

Digitized by Google

Was the verdict excessive or contrary to the court's instruction?

We are not at liberty to consider the first part of this question. The action of the trial court in allowing the verdict to stand concludes review by us. Illinois Cent. R. Co. v. Davies, 76 C. C. A. 613, 146 Fed. 247, and cases cited. But whether the verdict so contravenes the court's instructions as to require a reversal of the judgment is open for consideration. The court gave a certain instruction relating to the allowance of a credit in favor of the defendant of the sum of $1,500. The facts out of which any claim to such a credit could arise are as follows: Crowe, the president of the company, with a view of encouraging the employé in the early stage of his employment, sold him at a low price and on credit a few shares of his individual holdings of the capital stock of the plaintiff company, with an understanding that such dividends as should be declared on the shares and such moneys as Graves might from time to time pay on account should be applied towards the agreed price, and with the further understanding that, whenever Graves should leave the service of the company, the shares should be returned to Crowe, and that he should refund to Graves the aggregate of what he might have paid on them. Graves died in May, 1904, and under the agreement between him and Crowe the amount of $1,500 was due from Crowe to Graves' estate, pursuant to the understanding mentioned. The defendant pleaded in its answer that this money was held by the company for the purpose of being applied in reduction of Graves' defalcation, and asked that the amount thereof be credited to the defendant on whatever liability should be established against it. The instruction in question is not entirely clear. Two different meanings are imputed to it by opposite counsel; one consistent with the verdict, and the other inconsistent with it. Under no conceivable view of the facts did the plaintiff company have any funds in its hands belonging to Graves which could or should have been applied by way of reduction of the amount due it by reason of Graves' defalcation. The jury, doubtless, did not understand the instruction to require the allowance in favor of the defendant, and did not make any such allowance in reaching its verdict, and it is fairly to be presumed, from the fact that the learned trial court did not set aside the verdict, that he did not understand the jury had misinterpreted the instruction in question. Where the record does not clearly show that the finding of the jury is contrary to the instruction of the court, the presumption is that they followed it. Gregory v. Morris, supra. In any event, the failure to allow the credit of $1,500 did not prejudicially affect defendant's rights. The verdict reached was in strict accord with the proof touching the amount of Graves' embezzlement during the year covered by the contract, and if the jury had allowed the unjust and unwarrantable credit it would have been error. We will not strain ourselves to find a technical error in procedure which will result in a substantial error in fact.

Were the instructions given to the jury on the subject of "immediate notice" erroneous?

We have carefully examined the full charge and all the observations of the court bearing upon the meaning of the words "immediate notice of loss," as found in the contract sued on, and find them in substantial

Digitized by Google

accord with the views already expressed by us on that subject. We are unable to say that the disconnected expression complained of by defendant's counsel, when taken in connection with the whole charge, conveyed any false impression to the jury.

We have now considered all the important questions argued by counsel. Others of less moment are suggested in the assignment of errors. To them we have given careful consideration, and, finding nothing in them to affect the result already foreshadowed, the judgment must be affirmed, and it is so ordered.

SANBORN, Circuit Judge (dissenting). The main defense of the Ætna Company was that the employer's agreement of February 24, 1903, constituted the inducement of, and became a part of, the contract of indemnity made on March 12, 1903, and renewed on June 30, 1903, and that the covenants of the Crowe Company therein, to the effect that there should be a countersignature of general managers or presidents of the company upon the checks signed by Graves, and that the bankbook should be balanced and compared monthly with the cashbook by some other officer or person, had been broken, and that the Crowe Company falsely stated in this agreement that Graves' accounts had been examined on February 12, 1903, and had been found correct with funds on hand to balance. To this defense two principal facts were essential: (1) That the statement of February 24, 1903, was the inducement and became a part of the contract; and (2) that its covenants were broken, or its statements false. The court below received the evidence offered by the Ætna Company to establish the first fact, held that this evidence conclusively proved it, charged the jury to that effect, and submitted the other issues of fact to them upon that adjudication. The employer's statement contained this covenant by the Crowe Company:

> "That the above answers are to be taken as conditions precedent to and as the basis of execution of said indemnity bond, and in consideration of the issuance of said indemnity bond by the company, it is further agreed that the checks and supervision above described shall be observed."

The Ætna Company proved without contradiction that more than 300 checks, which aggregated more than $150,000, were issued by Graves without the countersignatures covenanted; that the loss complained of resulted in large part, if not entirely, from the use of these checks; and there was evidence, conclusive to my mind, that no useful comparison of the bankbook with the cashbook was ever made by any other officer. These facts, indeed the simple undisputed fact that these checks were issued without the countersignatures, and that they caused the loss, constituted a complete defense to this action, in view of the finding of the court below that the statement was a part of the contract, because they conclusively demonstrated the fact that the Crowe Company had committed the first substantial breach of the agreement, which consisted of mutual covenants, and that by the terms of its contract the policy was avoided. Rice v. Fidelity & Deposit Co., 103 Fed. 427, 433, 43 C. C.A. 270, 276; Hunt v. Fidelity & C. Co., 99 Fed. 242, 245, 39 C. C. A. 496, 499; National Surety Co. v. Long, 125 Fed. 887, 60 C. C.

Digitized by Google

A. 623; U. S. Fidelity, etc., Co. v. Rice, 78 C. C. A. 164, 148 Fed. 206; Groton Bridge & Mfg. Co. v. Clark Pressed Brick Co., 136 Fed. 27, 33, 60 C. C. A. 577, 583; Atlas Reduction Co. v. New Zealand Ins. Co., 138 Fed. 497, 498, 71 C. C. A. 21, 22. The court below therefore erred when it refused to instruct the jury to return a verdict for the Ætna Company, and when it declined to charge them, as requested, that, if the coal company failed to perform any of its agreements in its statement which related to the future, the contract of indemnity was released, and when it refused to instruct them, as requested, that the truth of its answers therein relative to the past was material to the validity of the contract of indemnity. On account of these and other errors, the judgment below ought to be reversed, and a new trial of this action should be ordered.

The majority of the court concede these errors. They agree that if the employer's statement was the inducement, and became a part of the contract of indemnity, the Ætna Company's defense was complete, and the court should have instructed the jury to return a verdict in its favor. But they are of the opinion that the judgment should be affirmed because they think that the court did not hold or instruct the jury that the employer's statement became a part of the contract, because in their opinion there was no substantial evidence to that effect, and because, if the court held that this statement was a part of the contract, this was, in their opinion, an error in favor of the Ætna Company which offsets the fatal error against it.

With great respect for, and deference to, their judgment I have found it impossible to bring my mind to their conclusions.

1. That the trial court held and instructed the jury that the employer's statement of February 24, 1903, was the inducement and became a part of the contract of indemnity in suit is demonstrated to my satisfaction by these facts, which the record discloses:

(a) When the employer's statement was first offered in evidence, the court reserved its ruling. After 12 letters, 2 renewal certificates, and 30 pages of oral testimony had been received to prove that it was the inducement of, and that it became a part of, this contract, the Ætna Company again offered the statement, the court admitted it in evidence over the objections of the Crowe Company to the effect that the evidence was insufficient to prove that it was a part of the indemnity contract, and no countervailing evidence upon this subject was ever produced.

(b) The court did not submit to the jury the question whether or not the employer's statement of February 24, 1903, was the inducement and a part of the contract; but in delivering its charge it read to them certain questions and answers which this statement contained, and it instructed them that if the Crowe Company fraudulently made those answers, or if it dishonestly or negligently failed to fulfill the promises which they evidenced, it could not recover in this action.

(c) It did positively instruct the jury that this statement became the basis and a part of the contract in these words, the first part of which may be found in the opinion of the majority:

Digitized by Google

"There was a good deal of correspondence, you will recall, introduced in evidence here between the indemnity company, in the East, and the local agents representing them, in Kansas City. I admitted that correspondence, not that I thought that it was binding on the company, but I admitted that evidence to show the history and development of the transaction. It resulted in the end in the indemnity company insisting upon an application and questions according to the form that they insisted should be used [this form was the employer's statement of February 24, 1903], rather than a form used for fraternal organizations, and which perhaps had been used upon a prior occasion. Then it was that the coal company made answers to certain questions which are very important and material in your deliberations in the jury room after you have retired to consider your verdict."

The court here read to the jury many of the questions and answers in this statement, and then continued in this way:

"Now, in answering those questions, the coal company further agree, over their signature, that the above answers are to be taken as conditions precedent to and as a basis of execution of said indemnity bond, and in consideration of the issuance of said indemnity bond by the company it is further agreed that the checks and supervisions above described shall be observed. So that, as the company had the right to insist upon that, and, secondly, as the company had the right to cancel and terminate this bond at any time, with or without good reason, simply by so electing and so declaring in writing to the coal company, the mere fact that these questions and answers were made in February, 1903, would date back as well as ahead and form a part of the bond upon the part of the coal company upon which the obligations of the indemnity company would rest, and which must be construed together as one contract, although upon two separate pieces of paper, and which must be taken together."

And, again, the court charged:

"Now, the indemnity company made these questions and answers precedent to a recovery upon this bond. * * * So that the indemnity company had the right to have these questions answered, and one of the questions here is: Were they fairly and truthfully answered?"

And then the court proceeded to and did submit that question to the jury under erroneous instructions, when, as all the members of this court agree, the evidence conclusively answered it in the negative.

Can there be any doubt, in view of these facts and these instructions, that the court below held and charged that the employer's statement was the basis and a part of the contract in suit? The fact that the court failed to grant a new trial furnishes no evidence to the contrary. On the other hand, it tends to prove that the trial court adhered to its holding at the trial, that it still held that the statement was a part of the contract, but that the evidence failed to conclusively prove a breach of its covenants. The result is that the court held and charged that the employer's statement was the basis of, and a part of, the contract, and submitted to the jury the question whether or not the Crowe Company had broken the covenants it had made therein, when the evidence was conclusive that it had done so, and the court should have given the peremptory instruction for the Ætna Company, which it requested. The failure to give this instruction was an error both prejudicial and fatal to the Ætna Company's case. If it had been given, the verdict and judgment would have been in its favor, and the Ætna Company assigned and relies

Digitized by Google

upon this error for its reversal. On account of it, it is in my judgment entitled to a new trial.

2. An endeavor will be made later to show that there was substantial evidence that this employer's statement was the inducement and a part of the contract, and that the trial court was right in its ruling to that effect.

But, if that court was in error in this respect, that error is not assigned, and it does not extract the vice of the fatal error challenged by the Ætna Company. In an action at law, a federal appellate court has no jurisdiction to try the case anew and to determine whether or not the judgment is for the right party. It is a court authorized to review and correct the errors of law of the court below in the trial of the case, and these alone; nor may it lawfully weigh and offset the errors challenged by the plaintiff in error against those against the defendant in error which are not assigned and affirm or reverse the judgment, as in its opinion the balance turns. Every litigant is entitled to a trial by jury of every issue of fact in his case without any error of law in the trial or the instructions; and, if any error prejudicial to him has crept into the trial, he is entitled to a new trial by the jury without error, although the first trial may have bristled with errors in his favor. Two errors do not make a trial without error, any more than two wrongs make a right.

It is true that, where a successful party was entitled upon all the issues and upon all the evidence in the case to a peremptory instruction in his favor, when the defeated party had introduced all his evidence and rested his case, and it is plain that the latter could have produced no other evidence, errors in subsequent instructions to the jury may be disregarded, because the defeated party could not have recovered in such a case in any event, and hence such errors could not have prejudiced him. It was upon this ground, and not upon the ground that the court could try the case de novo and affirm the judgment if it was for the right party, that the judgment in the late case of Cook v. Foley, 81 C. C. A. 237, 152 Fed. 41, was affirmed. In that case the court held that the defeated parties were permitted without objection to bring forward all the proofs which they had, and to try out the single issue which conditioned their entire claim, the issue whether or not there was fraud or gross mistake in the employer's estimates, and that they produced no evidence to sustain it. In that case it appeared in this way that they were not, and could not have been, prejudiced by the rulings in the charge, because they could not recover upon the entire evidence in any event.

But where there remains any issue for the jury, as there does remain in this case, the issue of notice in any event, there this rule is inapplicable, because the fact does not appear and cannot be made to appear beyond doubt that the erroneous ruling did not prejudice and could not have prejudiced the defeated party.

The legal presumption is that error produces prejudice. It is only when the fact so clearly appears as to be beyond doubt that an error challenged did not prejudice, and could not have prejudiced, the complaining party, that the rule that error without prejudice is no ground for reversal can have effect. Deery v. Cray, 5 Wall.

Digitized by Google

795, 807, 808, 18 L. Ed. 653; Peck v. Heurich, 167 U. S. 624, 629, 17 Sup. Ct. 927, 42 L. Ed. 302; Smith v. Shoemaker, 17 Wall. 630, 639, 21 L. Ed. 717; Moores v. Bank, 104 U. S. 625, 630, 26 L. Ed. 870; Gilmer v. Higley, 110 U. S. 47, 50, 3 Sup. Ct. 471, 28 L. Ed. 62; Railroad Co. v. O'Brien, 119 U. S. 99, 103, 7 Sup. Ct. 118, 30 L. Ed. 299; Mexia v. Oliver, 148 U. S. 664, 673, 13 Sup. Ct. 754, 37 L. Ed. 602; Railroad Co. v. O'Reilly, 158 U. S. 334, 337, 15 Sup. Ct. 830, 39 L. Ed. 1006; Railroad Co. v. McClurg, 8 C. C. A. 322, 325, 326, 59 Fed. 860, 863; Association v. Shryock, 20 C. C. A. 3, 11, 73 Fed. 774, 781; Railroad Co. v. Holloway, 52 C. C. A. 260, 114 Fed. 458; Armour & Co. v. Russell, 75 C. C. A. 416, 144 Fed. 614, 615.

This was a trial by jury. The seventh amendment to the Constitution reads:

"In suits at common law, where the value in controversy shall exceed twenty dollars, the right of trial by jury shall be preserved; and no fact tried by a jury shall be otherwise re-examined, in any court of the United States, than according to the rules of the common law."

Of the latter clause the Supreme Court said, in Parsons v. Bedford, 3 Pet. 433, 446, 448, 7 L. Ed. 732:

"But the other clause of the amendment is still more important, and we read it as a substantial and independent clause: 'No fact tried by a jury shall be otherwise re-examined, in any court of the United States, than according to the rules of the common law.' This is a prohibition to the courts of the United States to re-examine any facts, tried by a court, in any other manner. The only modes known to the common law to re-examine such facts are the granting of a new trial by the court where the issue was tried, or to which the record was properly returnable; or the award of a venire facias de novo by an appellate court, for some error of law which intervened in the proceedings."

And this statement has been often reaffirmed by the Supreme Court. Barreda v. Silsbee, 21 How. 146, 166, 16 L. Ed. 86; Justices v. Murray, 9 Wall. 274, 277, 19 L. Ed. 658; Miller v. Life Ins. Co., 12 Wall. 285, 300, 20 L. Ed. 398; Insurance Co. v. Comstock, 16 Wall. 258, 269, 21 L. Ed. 493; Insurance Co. v. Folsom, 18 Wall. 237, 249, 21 L. Ed. 827; Railroad Co. v. Fraloff, 100 U. S. 24, 31, 25 L. Ed. 531; Lincoln v. Power, 151 U. S. 436, 438, 14 Sup. Ct. 387, 38 L. Ed. 224; Chicago, Burlington & Q. R. Co. v. Chicago, 166 U. S. 226, 246, 17 Sup. Ct. 581, 41 L. Ed. 979; Capital Traction Co. v. Hof, 174 U. S. 1, 9, 19 Sup. Ct. 580, 43 L. Ed. 873.

This appellate court, therefore, has no power to re-examine the issue of fact whether or not the employer's statement became a part of the indemnity contract. The only way in which that issue can be lawfully re-examined is by the grant of this court of a new trial by a jury on account of an error in law at the former trial. The Ætna Company has the constitutional right to a trial of that issue by a jury; that is to say, by a trial court consisting of a judge and a jury, a court presided over by a judge, who assists and directs the jury and makes his rulings upon the admission and rejection of evidence and announces the rules of law which govern the trial in the trial court where the parties and witnesses are present and ready to submit their proof and conform their acts to those rulings. A jury trial is not a trial by 12 men, nor by an appellate court, but by 12 men presided over

Digitized by Google

by a judge, who makes his rulings in the course of the trial while witnesses and parties are present and ready to act.

The reason why the appellate court may not lawfully disregard conceded errors properly assigned, because there were counter errors, is that the litigants have the right to correct rulings at the trial and not in the appellate court alone, to the end that they may know, while they are trying the case, while they have their witnesses and evidence at hand, to what issues to direct their proof and how to conduct their trial in view of the rules of law which the court finds control the hearing. One has no just and fair trial by jury according to the course of the common law who is compelled to go to the jury under erroneous rulings and instructions, and, when right rulings are announced by an appellate court, is deprived of all opportunity to present his witnesses and his evidence in the light and knowledge of the correct rulings. No better illustrations of this rule can be found than the case at bar, in which it seems to me it is to be disregarded, and the cases from the Supreme Court which follow, in which it is asserted and applied.

At the trial below the court received in evidence, upon the issue of fact whether or not the statement became a part of the contract of indemnity, 12 letters, 2 other writings, and more than 30 pages of oral testimony, and then admitted in evidence the statement, and held, and charged the jury, that it was a part of the contract of indemnity. Of course, when the court below admitted the statement in evidence and held that the proof which had been presented made it a part of the contract, the Ætna Company offered no more evidence upon that issue. If the court had held otherwise, the Ætna Company would have had the opportunity to introduce, and doubtless it would have introduced, other evidence to establish the fact, for the record strongly indicates that there was such. That company relied, however, as it had a right to rely, upon the ruling of the court that this fact was established, and upon that basis it prepared its argument and presented its case to the jury. If, after receiving all this evidence and holding this fact established, the court below had rejected it in its charge and had instructed the jury that it did not establish the fact, it would have committed reversible error, because it would thereby have deprived the Ætna Company of the opportunity to supply its place with better testimony or to supplement it with other testimony, and also of its opportunity to prepare and argue its case to the jury upon the decisive issues in the case alone. Harkison v. Harkinson, 41 C. C. A. 201, 101 Fed. 71.

In a trial according to the course of the common law, every litigant is entitled, before he goes to the jury, to a ruling upon the admissibility of his evidence and upon its sufficiency to be submitted to the jury to establish the issuable fact to which it is directed, to the end that he may have an opportunity to produce other and better evidence, if necessary, and to properly prepare and argue his case to the jury.

If this court now withdraws all the Ætna Company's evidence upon this crucial issue from the case, or if it here adjudges it insufficient to establish the fact which the court below held it did establish, that

Digitized by Google

company is thereby deprived of its rightful opportunity to produce other and better evidence and to properly prepare and argue its case to the jury.

In Deery v. Cray, 72 U. S. 795, 806, 807, 18 L. Ed. 653, the court erroneously rejected a deed offered by the plaintiff. The defendants then introduced in evidence a deed and a chain of title thereunder which established a perfect title in them, even if the plaintiff's deed was admitted in evidence, and when he sued out a writ of error they met him with the proposition that the rejection of his deed, if erroneous, was conclusively shown to have been error without prejudice. But the Supreme Court overruled the position, upon the ground that, while it appeared by the record that the error was not prejudicial, it might not have appeared so if the plaintiff's deed had not been rejected, because she might then have proved that the defendants' deed was a forgery or have established some other fact fatal to it. The case is not only persuasive, but controlling, here, for, if it now appears that there was no substantial evidence that the employer's statement became a part of the contract, the Ætna Company might and doubtless it would have produced other evidence that it was so, if the court below had not held that its evidence was sufficient to establish that fact and submitted to the jury the issue of its breach upon that assumption. To the same effect is Peck v. Heurich, 167 U. S. 624, 629, 17 Sup. Ct. 927, 42 L. Ed. 302.

Again, the error of the court below, if any, in receiving the evidence and holding it to be conclusive that the employer's statement became a part of the contract, is not reversible here, because the Crowe Company sued out no writ of error, and a defendant in error who does not sue out a writ of error himself cannot, by assigning cross-errors, or by brief or argument, confer jurisdiction upon an appellate court to consider, review, or decide rulings against him in the court below. Bolles v. Outing Co., 175 U. S. 262, 268, 20 Sup. Ct. 94, 44 L. Ed. 156; Cleary v. Ellis Foundry Co., 132 U. S. 612, 614, 10 Sup. Ct. 223, 33 L. Ed. 473; Canter v. American, etc., Ins. Co., 3 Pet. 307, 318, 7 L. Ed. 688; Chittenden v. Brewster, 2 Wall. 191, 196, 17 L. Ed. 839; Loudon v. Taxing District, 104 U. S. 771, 774, 26 L. Ed. 923; The Maria Martin, 12 Wall. 31, 40, 20 L. Ed. 251; Clark v. Killian, 103 U. S. 766, 769, 26 L. Ed. 607; U. S. v. Blackfeather, 155 U. S. 180, 186, 15 Sup. Ct. 64, 39 L. Ed. 114; The Stephen Morgan, 94 U. S. 599, 24 L. Ed. 266; Building & Loan Ass'n v. Logan, 14 C. C. A. 133, 134, 66 Fed. 827, 828; Guarantee Co. v. Phenix Ins. Co., 124 Fed. 170, 59 C. C. A. 376; Pauly, etc., Mfg. Co. v. Hemphill Co., 10 C. C. A. 595, 600, 62 Fed. 698, 703.

In Chittenden v. Brewster, 2 Wall. 191, 196, 17 L. Ed. 839, the plaintiff appealed, and the defendant attempted, as here, to defeat his appeal because he had failed to prove facts essential to his case, to wit, the issue and return unsatisfied of an execution; but the Supreme Court refused to consider this failure of proof or the error which the appellees averred because the latter had not appealed, and said:

Digitized by Google

"If the appellees desired to avail themselves of this error in the decree, they should have brought a cross-appeal. By omitting to do so, they admit the correctness of the decree as to them. The case stands before the appellate tribunal the same as if the error had been waived at the hearing."

In Cleary v. Ellis Foundry Co., 132 U. S. 612, 10 Sup. Ct. 223, 33 L. Ed. 473, the writ of error was sued out by the plaintiff; but the plaintiff had proved no case, because the evidence conclusively established the fact that his cause of action was barred by the statute of limitations, and the defendant had saved this error by objection and exception, but had sued out no writ of error. The Supreme Court held that it could not take cognizance of or hear this objection, and it affirmed the judgment against the defendant.

In Bolles v. Outing Co., 175 U. S. 262, 268, 20 Sup. Ct. 94, 44 L. Ed. 156, the plaintiff sued out a writ of error, and the defendant urged two defenses, which, if sustained, were fatal to his recovery; but it had not sued out a writ of error. The Supreme Court said:

"It is sufficient to say of these that the defendant did not take out a writ of error, and cannot now be heard to complain of any adverse rulings in the court below."

So imperative and indubitable was this rule found to be, after briefs, arguments, and deliberate consideration, that, in a case in which the defendant below sued out a writ of error, the plaintiff, without suing out a writ, argued and insisted in its brief that a judgment against it could not stand because there were errors in the rulings of the court below against it upon the trial, and this court refused to consider or review these rulings, and ordered judgment against the plaintiff, that we were compelled to hold upon a writ of error subsequently sued out by the plaintiff that the judgment we had directed must be reversed for the very errors which the plaintiff had tried to present in answer to the first writ, and that our judgment upon that writ did not render the questions which these errors presented res adjudicata. Guarantee Co. v. Phenix Ins. Co., 124 Fed. 170, 59 C. C. A. 376; Wickliffe v. Buckman, 12 B. Mon. (Ky.) 424; Smith v. Bogenschultz, 14 Ky. Law Rep. 305, 20 S. W. 390, 391.

When a case comes to an appellate court upon a writ of error of one party only, the errors in his favor are waived by his opponent, and the question for the appellate court is: Were the rulings challenged by the writ and the assignment of errors erroneous, upon the assumption that those not thus challenged were correct? And the coal company has no right in this case to the consideration and review of the rulings against it upon the admission, or upon the effect of the evidence offered and received to establish the fact that the employer's statement was the inducement and a part of the contract of indemnity.

Moreover, if there was no evidence that the statement was a part of the indemnity contract, the submission to the jury of the questions upon its breach and the charge of the court upon them constituted fatal and prejudicial errors, because they tended to withdraw the attention of the jury from the issues actually involved, and to lead them to decide the case upon false issues, and in that way to reach an erroneous result. Every litigant has the legal right to a fair and impartial

Digitized by Google

trial of the issues which his case presents according to the law and the evidence applicable to those issues alone. The submission to the jury for their consideration of extraneous issues or of evidence which is neither relevant nor material to the questions upon trial is a violation of this right, and it constitutes a fatal error, because it tends to withdraw the attention of the jury from the issues involved, and to lead them to decide the case upon false issues, and in that way to reach an erroneous result. Northwestern Life Ins. Co. v. Stevens, 18 C. C. A. 107, 112, 71 Fed. 258, 263; Railroad Co. v. Houston, 95 U. S. 703, 24 L. Ed. 542; Railroad Co. v. Blessing, 14 C. C. A. 394, 398, 67 Fed. 277, 281; Union Pac. R. Co v. Field, 137 Fed. 14, 15, 69 C. C. A. 536, 537; Frizzell v. Omaha St. Ry. Co., 59 C. C. A. 382, 384, 124 Fed. 176, 178; Equitable Life Assur. Co. v. McElroy, 28 C. C. A. 365, 376, 83 Fed. 631, 642; Sparks v. Territory of Oklahoma, 146 Fed. 371, 373, 76 C. C. A. 594.

The majority argue that the error of the submission of these false issues cannot be considered, because it was invited by, was favorable to, and was not assigned as error by, the Ætna Company; but the Ætna Company appears to me to have objected to, and to have assigned as error, the submission of these issues to the jury, when it requested a peremptory instruction that they should not be submitted, and that the court should direct a verdict in its favor. However this may be, the ruling which makes these issues false is not yet made, and will not be made until the opinion in this case is filed. It is in argument to persuade against, and if possible to prevent, this court from affirming the judgment, on the ground that the ruling of the court below that the employer's statement was a part of the contract was erroneous, and to prevent it from thereby making the issues under that statement false, that the contention is made that, even if that conclusion were reached, there would still be reversible error in the trial, because under that holding the case would have been submitted to the jury upon false issues. It cannot be necessary to object, except, and assign error to the possible ruling or decision of an appellate court which opposing counsel seek to secure before it is announced in order to be heard to present reasons why it ought never to be made.

The considerations and decisions which have now been presented have led my mind to this conclusion. The conceded error of the court in refusing to instruct the jury, as requested, that the evidence conclusively established the breach of the covenants of the employer's statement, when it had held and charged that this statement constituted the basis and a part of the contract of indemnity in suit, entitles the Ætna Company to a new trial of this case, even if the latter ruling was erroneous, and there was no substantial evidence to sustain it (1) because a refusal to grant a new trial on the latter ground deprives the Ætna Company of a jury trial of its case according to law without error, in that it deprives it of notice and knowledge of the incompetency and insufficiency of its evidence, which the trial court held competent and sufficient, at the time of and during the trial, while witnesses and evidence are at command, and there is yet time and opportunity to present them, and of its opportunity to replace or supple-

Digitized by Google

ment its insufficient evidence and to prepare and present its evidence and its case to the jury with knowledge of the correct rulings of law applicable to its trial, and thus deprives it of undeniable rights, opportunities, and attributes of every fair trial by jury; (2) because the error, if any, in the ruling that the statement is a part of the contract, is not challenged by writ of error, and is not reviewable in this case; and (3) because, if it were error, and were reviewable, there would still be reversible error in the trial, in that the case was submitted to the jury under false issues and erroneous instructions.

3. There was substantial evidence, sufficient to sustain the verdict of a jury, that the statement was the inducement of, and a part of, the contract of indemnity made in March, 1902, renewed in June, 1903, and that question was for the jury, and not for the court below, nor for this court.

The record discloses these uncontradicted facts: The original bond indemnified the Crowe Company from June 1, 1901, to June 1, 1902. The indemnity was extended from June 1, 1902, to June 1, 1903, by a renewal receipt, which was delivered to the Crowe Company on March 12, 1903. It was again extended from June 1, 1903, to June 1, 1904, by a renewal receipt dated June 30, 1903. The embezzlements for which the Crowe Company recovered in this suit extended from May 28, 1903, to April 22, 1904, and a part of them fell under the first, and a part under the second, renewal. If there was any evidence that the employer's statement became a part of the contract which worked the first renewal, it cannot be disregarded, because that covers a portion of the embezzlements recovered. One Mastin was a member of a firm of insurance agents at Kansas City, the place of business of the Crowe Company, and a personal friend of J. R. Crowe, the president of that company. The Ætna Company's place of business was Hartford, in the state of Connecticut. Mastin's firm were the agents of the Ætna Company, delivered to Crowe the original bond, and issued other insurance from other companies to the Crowe Company. He testified that all the business between the Ætna Company and the Crowe Company was conducted through his firm; that, whenever they would receive a letter from the Ætna Company which involved answering, they would inform the Crowe Company, and then, after seeing them, would ordinarily report or write back to the Ætna Company; that it was necessary, he believed, to have those employers' statements signed, or was the custom of the companies to have them signed, before they issued the renewals; and that the letters between the Ætna Company and the Crowe Company and their inclosures were sent and received. On August 26, 1902—the bond had expired on June 1st preceding—the Crowe Company had no existing indemnity, and Mastin's firm wrote the Ætna Company that the Crowe Company wanted the bond continued; but Crowe was out of town, and they could not get an employer's statement from him. On October 3, 1902, the Ætna Company answered, inquired if Crowe had returned, and requested an employer's renewal certificate. On October 13, 1902, Mastin's firm wrote that they had no employer's statements and asked for a supply. On October 17, 1902, the Ætna Company answered, inclosed an employer's renewal certificate under bond F. 1,774, David C. Graves, asked them to

Digitized by Google

have it completed in full by the company, and added: "If everything is satisfactory, renewal receipt will be issued continuing bond in force for the remaining year." On November 11, 1902, Mastin's firm wrote the Ætna Company and inclosed the employer's renewal certificate signed by the Crowe Company. On November 25th following, the Ætna Company answered that it had received the letter of November 21st and the employer's renewal certificate therein, but wrote:

"Upon examining this certificate, we find that there is no mention in same as to when the last examination or audit took place. We therefore cannot issue this renewal receipt until we have some advice when the accounts were last audited. We inclose herewith another blank, which please have filled in properly, and if everything is satisfactory, renewal receipt will be issued."

On December 22, 1902, Mastin's firm wrote the Ætna Company and inclosed a second employer's renewal certificate signed by the Crowe Company. This certificate stated that Graves' accounts were last examined or audited on August 1, 1901, by H. D. Buchanan and were found correct up to July 1, 1901. On December 26, 1902, the Ætna Company answered thus:

"We have for acknowledgment your favor of the 22d inst. inclosing employer's renewal certificate in connection with our bond No. F. 1,774, covering Mr. David C. Graves, in favor of the J. R. Crowe Coal & Mining Company. This bond was not renewed when it expired on June 1, 1902, owing to the fact of our inability to obtain employer's renewal certificate properly made out. The renewal certificate which you have now forwarded us is properly made out, but we note that the last examination or audit of Mr. Graves' account took place on August 1, 1901. This is entirely unsatisfactory to us as the failure to make an audit in a period of nearly a year and a half is from our point of view a serious drawback to renewing this business. We might also say that, when this bond was originally issued, we did not obtain the proper form of employer's statement for this class of risk, as you sent us the short form F. 3 which is used for fraternal societies and the like, instead of form F. 4, which is more complete. We are, therefore, unable to determine how often the employers propose to have an audit made. We sum the matter up then to the effect that if it is desired that this bond shall be renewed, a complete and systematic audit of Mr. Graves' account must be made in a businesslike way, and the employers to fill out and send to us, through your office, the inclosed blank form of employer's statement, F. 4."

The blank form of employer's statement F. 4 is the employer's statement of February 24, 1903, which is the subject of this litigation. It was inclosed in this letter. The Crowe Company then caused an examination and audit to be made of Graves' accounts, filled out and signed this employer's statement F. 4, and on February 25, 1903, Mastin's firm inclosed it in this letter and sent it to the Ætna Company:

"Please find enclosed employer's renewal certificates—Indemnity Bond—No. 1774—David C. Graves in favor of J. R. Crowe Coal & Mining Co. The above-named firm have had their books audited, and everything is found to be in perfect order. Trusting you will see fit to renew the bond, beg to remain, Yours very truly."

On March 2, 1903, the Ætna Company answered:

"We have your favor of the 25th inst. inclosing employer's statement in connection with bond F. 1,774 David C. Graves, in favor of the J. R. Crowe Coal & Mining Company, and in reply take pleasure in handing you renewal receipt renewing same to June 1, 1903, which we trust will be found satisfactory."

Digitized by Google

On March 5, 1903, Mastin's firm returned the renewal receipt, and wrote that they thought "the bond should be renewed from the date on which they finished auditing their books." To this letter the Ætna Company replied on March 9, 1903, that the renewal from June 1, 1902, covered past embezzlements during that time, if any, that many of those would not be covered by a renewal from February, 1903, and added:

"This feature is invariably lost sight of as a general rule, and if you will point this out to the J. R. Crowe Coal & Mining Company they will understand the situation and take the renewal up, continuing bond F. 1,774 without any break. Of course it is immaterial to us. We could issue a new bond from today covering Mr. Graves, but we would require to have some new papers. We return the renewal certificate herewith, and shall be glad to hear from you if this is satisfactory. If not, we shall be glad to issue a bond from this date if everything is in order."

Mastin's firm received the renewal receipt in this letter on March 12, 1903, delivered it to the Crowe Company, and the contract was closed. On June 30, 1903, the bond was again continued in force to June 1, 1904, subject to all the covenants and conditions thereof.

The court below was of the opinion that this evidence conclusively established the fact that the statement of February 24, 1903, was the inducement of, and became a part of, the contract of renewal of March 12, 1903, and that the June renewal continued this contract of indemnity. If the question were for the court, I should be unable to resist the same conclusion. It is true, as pointed out by the majority, that the statement contains references to a bond as:

"Amount of bond, $5,000; to date from February 1, 1903, to February 15, 1904."

"Employer's statement covering application made by David C. Graves of Kansas City, Mo. to the Ætna Indemnity Company, Hartford, Conn., for an indemnity bond."

"It is hereby agreed by the undersigned that the above answers are to be taken as conditions precedent to and as the basis of execution of said indemnity bond, and in consideration of the issuance of said indemnity bond by the company, it is further agreed that the checks and supervision above described shall be observed."

But these statements must be read in the light of the letters, of the acts of the parties, and of the testimony in this case, in order to rightly determine the question whether this statement was made and received to procure a new bond or to secure the renewal of the old one, and when this is done the evidence appears to me to be conclusive. The letters show that there was but one subject of this negotiation. None of them writes or treats of a new bond. Every one of them writes and treats of a renewal of the old bond. All the letters from Mastin's firm ask for the renewal or are written to procure it. All the letters of the Ætna Company prescribe the terms upon which it will renew the old bond. None of them prescribes any terms for the issuance of a new bond. None of them mentions a new bond, except the letter of March 9th, in which the renewal was finally returned, and that states that the issue of such a bond would require new papers. From August 26, 1902, until December 26, 1902, the Crowe Company was constantly seeking a renewal of the old bond, never a new bond. For

Digitized by Google

this purpose it had executed and sent to the Ætna Company two employer's renewal certificates. If one of those certificates had been accepted, and a renewal receipt had been issued upon it, would not that certificate have conditioned and become a part of the contract of indemnity? The Ætna Company rejected these certificates. The reason why the employer's statement of February 24th is in the form which has been recited and repeatedly refers to an indemnity bond is made plain by the Ætna Company's letter of December 26th. It there states that it requires this form of employer's statement because it did not originally secure this, the proper form of statement when the original bond was made. During all this time the Crowe Company had been seeking a renewal of the old bond. The Ætna Company had been prescribing the terms on which it would issue one, and in the letter of December 26, 1902, it gave its ultimatum. It rejected the second certificate. It sent the blank form of employer's statement here in issue and wrote:

"We sum the matter up, then, to the effect that if it is desired that this bond shall be renewed, a complete and systematic audit of Mr. Graves' account must be made in a businesslike way and the employers to fill out and send to us, through your office, the enclosed blank form of employer's statement, F. 4."

The Crowe Company caused the audit to be made, filled out the statement, signed it, and sent it to the Ætna Company in the letter of Mastin's firm, which recited its transmission, the fact that the audit had been made, and closed with the words, "Trusting you will see fit to renew the bond, beg to remain, Yours very truly." The Crowe Company had thus accepted and complied with the terms on which alone the Ætna Company had informed it that it would renew the bond, and the Ætna Company then immediately issued the renewal receipt, which after the letters of March 5th and March 9th the Crowe Company accepted without change. To my mind there is substantial and compelling evidence that the employer's statement of February 24th was the inducement and became a part of the contract of indemnity evidenced by this renewal receipt. The Ætna Company had made it the sine qua non of the renewal. The Crowe Company had furnished it. The Ætna Company had received it and had issued its renewal receipt upon it. This seems to me to make it the inducement of, and a part of, the contract of indemnity.

If, however, this be not so, there was certainly sufficient evidence here under the established rules of law to entitle the Ætna Company to a trial of this issue by the jury. Wherever the evidence upon a matter of fact is of such a character that reasonable men in the exercise of an impartial judgment may honestly reach opposite conclusions, the question is for the jury. Railway Co. v. Ives, 144 U. S. 408, 417[1]; Chicago & N. W. Ry. Co. v. De Clow, 124 Fed. 142, 145, 61 C. C. A. 34, 37; Travelers' Ins. Co. v. Melick, 65 Fed. 178, 181, 12 C. C. A. 544, 547, 27 L. R. A. 629; Railway Co. v. Jarvi, 3 C. C. A. 433, 437, 438, 53 Fed. 65, 69; Fuel Co. v. Danielson, 6 C. C. A. 636, 57 Fed. 915; Railroad Co. v. Kelley's Adm'rs, 3 C. C. A. 589, 593, 53 Fed. 459, 463; Railway Co. v. Ellis, 4 C. C. A. 454, 456, 54 Fed. 481, 483. Two reasonable men, the majority of this court, are of the opinion

[1] 12 Sup. Ct. 679, 36 L. Ed. 485.

Digitized by Google

that this evidence fails to establish that the employer's statement became a part of the indemnity contract; one reasonable man, the trial judge, who saw the witnesses and noted all those matters not capable of record, whose opportunities to form a correct judgment were superior to those of any of the members of an appellate court, to whose deliberate opinion upon such a question the Supreme Court says that the appellate court should pay large respect (Patton v. Texas & Pac. R. Co., 179 U. S. 658, 660, 21 Sup. Ct. 275, 45 L. Ed. 361), was of the opinion not only that there was substantial, but also that there was conclusive, evidence that the statement became a part of the contract. The writer is of the opinion that the great preponderance of the evidence sustains this conclusion. Is it not then true that reasonable men may honestly differ upon the effect of this evidence, and that for that reason the question of fact is for the jury, and should be returned to them for trial?

Moreover, this issue of fact is one peculiarly within the province of the jury according to the established rule of decision. The question is what the effect of the 12 letters, the 2 renewal receipts, the employer's statement, and the 30 pages of oral testimony is, to determine the question whether the employer's statement is a part of the indemnity contract. In Rankin v. Fidelity Trust Co., 189 U. S. 242, 253, 23 Sup. Ct. 553, 557, 47 L. Ed. 792, the Supreme Court said:

> "Although the construction of written instruments is one for the court, where the case turns upon the proper conclusions to be drawn from a series of letters, particularly of a commercial character, taken in connection with other facts and circumstances, it is one which is properly referred to a jury."

In Etting v. Bank, 11 Wheat. 59, 6 L. Ed. 419, Chief Justice Marshall said:

> "Although it is the province of the court to construe written instruments, yet when the effect of such instruments depends, not merely on the construction and meaning of the instruments, but upon collateral facts in pais and extrinsic circumstances, the inferences of fact to be drawn from them are to be left to the jury."

And this rule is sustained by a flood of authority. McNamee v. Hunt, 87 Fed. 298, 301, 30 C. C. A. 653, 655; West v. Smith, 101 U. S. 263, 270, 25 L. Ed. 809; Brown v. McGran, 14 Pet. 477, 493, 10 L. Ed. 550; Goddard v. Foster, 17 Wall. 123, 142, 21 L. Ed. 589; Drakeley v. Gregg, 8 Wall. 242, 268, 19 L. Ed. 409; Barreda v. Silsbee, 21 How. 146, 167, 16 L. Ed. 86; Turner v. Yates, 16 How. 14, 23, 14 L. Ed. 824; Richardson v. City of Boston, 19 How. 263, 270, 15 L. Ed. 639; Nash v. Classon, 45 N. E. 276, 277, 163 Ill. 409; Roberts v. Bonaparte, 20 Atl. 918, 73 Md. 191, 10 L. R. A. 689; Eureka Fertilizer Co. v. Baltimore, etc., R. Co., 27 Atl. 1035, 1036, 78 Md. 179; Gassett v. Glazier, 43 N. E. 193, 195, 165 Mass. 473; 1 Thompson on Trials, §§ 1086, 1113, 1114; 4 Wigmore on Evidence, § 2556.

For the reasons which have now been stated, the errors relative to the breach of the covenants in the employer's statement were in my opinion prejudicial to the Ætna Company, this prejudice was not extracted by the errors in its favor, if any, relative to the admission and sufficiency of the evidence to establish the fact that the employer's

Digitized by Google

agreement was a part of the indemnity contract, and that company is entitled to a reversal of the judgment and a new trial of this issue.

There seems to me also to be error in the rulings of the court upon the question of notice. The bond required that:

"The company shall be notified in writing, addressed to the company, at its office, in the city of Hartford, Conn., of any fraudulent or dishonest act on the part of the employee which may involve a loss for which the company is responsible hereunder, immediately after the occurrence of such act shall have come to the knowledge of the employer."

The first notice given to the Ætna Company was sent May 28, 1904, was received by the company on June 4, 1904, and it was that "we are having our books audited, and there appears to be every evidence that there will be a shortage in his [Graves'] accounts," and it gave no other or further notice. The Crowe Company knew the fact which this notice stated just as well and just as conclusively on the 2d day of May, 1904, as it ever knew it. Its agent and expert accountant who examined Graves' accounts and discovered his dishonest acts commenced to do so on April 22, 1904. He caused the bankbook to be balanced, compared it with the cashbook and the outstanding checks, and discovered that there was a shortage in Graves' account of $212, and found unreceipted vouchers for the sum of $700 on that day and the day next succeeding. On April 23, 1904, he called Graves' attention to the shortage of $212, and the latter admitted it. He asked him to explain the irregular vouchers, and he tried, but was unable to do so. Upon cross-examination this accountant testified that on April 23, 1904, there was a plain shortage of $212 on the face of the books, that Graves admitted it, and that he was then satisfied that Graves had embezzled $700 on the unreceipted vouchers. On the afternoon of that day Graves voluntarily delivered his keys to his employer, left its service, and on May 1, 1904, he died. This testimony is undisputed, and it seems to me to establish beyond doubt the fact that the Crowe Company had such knowledge of a dishonest act of Graves that might involve a loss for which the Ætna Company was responsible as early as May 2, 1904; that it was its duty to notify that company immediately thereafter; and that a notice on June 2, 1904, was too late. The court was requested so to charge, and in my opinion its refusal was error.

When the evidence is undisputed, the question, what is an immediate notice is a question of law for the court, and a notice of 30 days after knowledge of a dishonest act is not an immediate notice. National Surety Co. v. Long, 125 Fed. 887, 60 C. C. A. 623; U. S. Fidelity, etc., Co. v. Rice, 148 Fed. 206, 78 C. C. A. 164; Smith, etc., Mfg. Co. v. Travelers' Ins. Co., 171 Mass. 357, 50 N. E. 516; National Construction Co. v. Travelers' Ins. Co., 176 Mass. 121, 57 N. E. 350; Cook v. Ins. Co., 183 Mass. 50, 66 N. E. 597; Wiggins v. Burkham, 10 Wall. 129, 133, 19 L. Ed. 884; Toland v. Sprague, 12 Pet. 300, 325, 9 L. Ed. 1093.

The case of American Surety Co. v. Pauly, 170 U. S. 133, 18 Sup. Ct. 552, 42 L. Ed. 977, is distinguishable from that at bar, in that there was a conflict of evidence as to the time when the acts of dishonesty were first discovered while in this case there seems to me to be no

Digitized by Google

such conflict. In that case notice was given on May 23d. The court charged that, if the act of dishonesty was not discovered until the middle or latter part of May, the jury might find that the notice was given with reasonable promptness; but that, if the discovery was made on March 2d, they must find otherwise. Pages 146, 147, of 170 U. S., pages 557, 558, of 18 Sup. Ct. (42 L. Ed. 977). The Supreme Court was reviewing this charge and assumed that the act was first discovered the middle or last of May. The case of American Surety Co. v. Pauly, 170 U. S. 160, 18 Sup. Ct. 552, 42 L. Ed. 977, arose upon a similar conflict of evidence.

And, finally, if this question of notice were open for a finding by the jury, the court below erred when it charged them:

> "Sometimes the suspicions might have arisen, and there might have been some facts that indicated, that the party was in arrears, and dishonestly so, and suspicions might exist that he was guilty of embezzlement; but subsequent developments might explain that away. So that the coal company, after suspicions had arisen, being prompt, had the right to pursue the inquiry to the end and find the true state of affairs, and then, if it gave notice to the indemnity company, notice within the meaning of this bond was immediately given."

The evidence in the case was that the Crowe Company had investigated from April until September, had discovered various defalcations which amounted to more than the penalty of the bond, but had never pursued the investigation to the end or discovered the true state of affairs, so that the effect of the charge was that no notice was required until the investigation ceased. In my opinion, this was a clear and plain error. The true rule is that the obligee in such a bond is required to give the notice immediately after he receives knowledge of such facts as would lead a man of reasonable prudence to believe that it was probable that the employé had committed an act of dishonesty or of fraud which might result in a loss by the obligor upon the bond. It is true that in other parts of the charge the court stated some general rules of law more nearly correct; but they failed to extract the vice of this specific and controlling charge, which was directed at the pith of the issue, to the effect that, if the Crowe Company gave notice after it had completed its investigation and had discovered the true state of affairs, that was an immediate notice, when the evidence was that it had discovered acts of dishonesty months before it ceased its investigation. The vice of a wrong rule in a charge of a court is not extracted by the fact that the right rule was also given, because it is impossible to tell by which the jury was governed, and the presumption is that error produces prejudice. Railway Co. v. Needham, 3 C. C. A. 129, 147, 52 Fed. 371, 377; Railroad Co. v. Farr, 6 C. C. A. 211, 216, 217, 56 Fed. 994, 1000; Armour & Co. v. Russell, 75 C. C. A. 416, 144 Fed. 614.

Digitized by Google

(154 Fed. 949.)

N. ERLANGER, BLUMGART & CO. v. UNITED STATES.

(Circuit Court of Appeals, Second Circuit. June 6, 1907.)

No. 294 (3,989).

1. CUSTOMS DUTIES—FINALITY OF APPRAISEMENT.

Customs Administrative Act June 10, 1890, c. 407, § 13, 26 Stat. 136 [U. S. Comp. St. 1901, p. 1932], making decisions of appraising officers final and conclusive, does not prevent inquiry as to whether such officers acted legally; and evidence is admissible to show that items independent of the actual value have been included in the appraised value. Appraisers may not cut off all inquiry into their action by merely stating that an item was added "to make market value."

2. SAME—CONVERTERS' COMMISSIONS.

Under Customs Administrative Act June 10, 1890, c. 407, § 19, 26 Stat. 139 [U. S. Comp. St. 1901, p. 1925], requiring appraised value to include, besides coverings, etc., "all other costs, charges and expenses incident to placing the merchandise in condition, packed ready for shipment to the United States," an invoice item described as a "converter's commission" was so included. *Held*, that this inclusion was proper, so far as it covered converters' services in having the goods dyed and finished, and in the absence of evidence to the contrary it would be presumed to be correct as to any other elements of the item.

Appeal from the Circuit Court of the United States for the Southern District of New York.

For decision below, see 152 Fed. 576, affirming a decision of the Board of United States General Appraisers, which had affirmed the assessment of duty by the collector of customs at the port of New York.

The case involves construction of Customs Administrative Act June 10, 1890, c. 407, § 13, 26 Stat. 137 [U. S. Comp. St. 1901, p. 1932], which provides that decisions of local appraisers, and of general appraisers acting singly in reappraisement cases, shall, unless appealed to a Board of General Appraisers, "be final and conclusive as to the dutiable value of such merchandise against all parties interested therein," and that, when so appealed to a board, the decision of the board "shall be final and conclusive as to the dutiable value of such merchandise against all parties interested therein, and the collector * * * shall * * * liquidate the * * * duties to be paid on such merchandise"; no appeal from the decision of the reappraisement board being allowed.

The opinion of the Board of General Appraisers in the present case is as follows, so far as pertinent:

"WAITE, General Appraiser. The protests allege that nondutiable commissions were erroneously included in the dutiable value of the merchandise. Three distinct states of fact respecting the action of importers and the customs officers with relation to these alleged commissions are disclosed by the record. They are as follows: * * * (3) Instances where amounts equaling items described in the invoices as commissions were deducted by the importers upon entry from the price stated in the invoice for the merchandise, but were added to such value by the local appraiser to make market value. An appeal being taken upon these invoices to a single general appraiser, he made a finding as follows: 'To invoice price packed add [here amount is stated] amount specified as commission, to make market value.' The action of the general appraiser was approved by a board of three general appraisers, to which an appeal was subsequently taken. * * * Stated more specifically, the contentions and allegations of the protests, so far as material, appear to be as follows: * * * (2) That in the circumstances described * * * the appraising officers improperly advanced the value by disallowing the deduction of commissions, and that where they were included upon entry the

Digitized by Google

collector compelled the importers to include them by duress to avoid the imposition of additional or penal duties. * * *

"It is understood that the principal controversy in these cases arises over the invoices referred to in finding 3. It is our opinion, however, that in view of the action of the appraising officers with respect to these invoices the question as to whether the items of so-called commissions were as a matter of fact nondutiable commissions, and the parties to whom they purport to be paid commissionaires, is a matter of no consequence, so far as the power of this board sitting to review the collector's liquidation is concerned. All that has been added was added to make market value and by the proper appraising officers, who were clearly within their right as set forth in sections 10, 13, and 19, Customs Administrative Act June 10, 1890 (26 Stat. 136, 139, c. 407 [U. S. Comp. St. 1901, pp. 1922, 1932, 1924]). U. S. v. Herrman, 91 Fed. 116, 33 C. C. A. 400; U. S. v. Kenworthy, 68 Fed. 904, 16 C. C. A. 61; Wanamaker v. Cooper (C. C.) 69 Fed. 329; In re Rothfeld, G. A. 3,291 (T. D. 16,646). The value returned by the appraising officers as the market value of imported merchandise, including every element which is expressly included to make market value, is, under well-settled principles, final and conclusive upon all persons interested, in the absence of fraud or illegality in the proceedings. Passavant v. U. S., 148 U. S. 214, 13 Sup. Ct. 572, 37 L. Ed. 426; Muser v Magone, 155 U. S. 240, 15 Sup. Ct. 77, 39 L. Ed. 135; U. S. v. Passavant, 169 U. S. 16, 18 Sup. Ct. 219, 42 L. Ed. 644.

"The importers have not suggested fraud, and the only illegality they allege or offered to prove at the hearing was that the items added represented nondutiable commissions paid to a commissionaire, and that they were added as commissions by the appraising officers. Testimony on this point was excluded, however, in view of the fact that the reports of the appraising officers expressly stated the items to have been added to make market value. Abundant authority for such action is found in the authorities cited above. The Circuit Court of Appeals in the Kenworthy Case, supra, held similar evidence to have been erroneously admitted in the court below, observing (page 908 of 68 Fed., and page 65 of 16 C. C. A.): 'It follows, therefore, that it was error to allow the witness Culver to testify that the disputed charge was paid as a commission and did not enter into the price or value of the wool; for that was a question of fact which had been finally determined by the authorized officials, and was not retriable by the jury. We are of opinion that the court should have given peremptory instructions in favor of the government.' * * *

"The protests are overruled, with an affirmance of the collector's decision."

Curie, Smith & Maxwell (W. Wickham Smith, of counsel), for appellants.

J. Osgood Nichols, Asst. U. S. Atty.

Before LACOMBE, TOWNSEND, and COXE, Circuit Judges.

LACOMBE, Circuit Judge. The appellants imported certain worsteds and cottons, their invoices containing a statement of the price of the goods in sterling and an addition of 2½ per cent. commission. The commission was deducted on the entry as nondutiable. The appraiser added it again to the valuation, to make market value. The general appraisers, on reappraisement proceedings, sustained this action. The importers protested against the liquidation. When the protests were transmitted to the Board of General Appraisers, the importers offered evidence in support of their protests. Objection was made to any inquiry as to the 2½ per cent. commission on the ground that the goods in question had been appraised and reappraised, and that the question of value could not be attacked, unless fraud were shown. The objection was sustained, and, in the language of the board:

Digitized by Google

"Testimony on this point was excluded, in view of the fact that the reports of the appraising officers expressly stated the items to have been added to make market value."

Upon appeal to the Circuit Court it was held (152 Fed. 576) error to exclude the testimony, and that, although the valuation as fixed by the appraisers is final, it may be attacked where items have been included independent of the actual value. The decision of the Circuit Court on this point is abundantly sustained by the authorities cited in Judge Hazel's opinion. See, also, decision of this court in U. S. v. Godillot & Co., 139 Fed. 1, 71 C. C. A. 505. The appraisers cannot include in their valuation some improper item, such as ocean freights from the foreign country to the United States, and cut off all inquiry as to their action by merely inscribing on the entry a statement that they added the item "to make market value."

The importer contends that this 2½ per cent. is merely a commission paid to his agent for services in procuring, forwarding, and caring for the goods, and is quite independent of the wholesale price of the goods at the market where they were bought. Conceding that the commission represents only the services above specified, the question would remain whether, under the conditions of trading in the foreign market, it was "an arbitrary item, which really represented a part of the market price of the goods to the ordinary purchaser in the foreign market," as was the case with the importations considered in U. S. v. Herrman, 91 Fed. 116, 33 C. C. A. 400. We do not find it necessary to decide that question upon this record, which is, perhaps, fortunate, because, by reason of the fact that the government put in no testimony, the conditions of buying and selling these goods are not as fully set forth as they were in the Herrman Case.

From the record it appears that the person to whom the 2½ per cent. is paid is known as a "converter." He procures from the manufacturers of the goods samples of such as they have on hand or are prepared to make. These samples, personally or by an agent here, he exhibits to the importer, who makes his selection and gives an order. Sometimes the importer goes direct to the manufacturer, makes selection, and gives an order, and thereupon furnishes a sample, with details, to the converter, who receives the goods from the manufacturer. The services rendered by the converter, after order given, appear to be as follows: (1) He receives the goods from the manufacturer, unfolds them, and carefully examines them, to see if they conform to the order and sample, to see that the importer is "getting the right goods." (2) He pays the manufacturer, and sends the bill, with his commission added, to the importer, who pays him. (3) The goods are delivered by the manufacturer folded, but the American market wants them rolled. Therefore the converter has them unfolded and rolled. (4) He has them packed in cases or canvas and attends to the shipping. (5) The testimony indicates that the manufacturer produces the goods only in the grey. It is the converter who "has them dyed and finished." The invoices indicate that a large part of these shipments were dyed.

In addition to the 2½ per cent. the invoices contain other items of charge variously stated as follows: "Making up and packing." "Pack-

Digitized by Google

ing, labor, etc., making up, and cases." "Making up in plaits." "Boxes." "Packing in cases." "Packing in canvas." "Cost of rolling, boards, paper, American shook cases." "Lining and nails." These items of charge are all added to the valuation, which the statute prescribes shall include "the value of all cartons, cases, crates, boxes, sacks, and coverings of any kind, and all other costs, charges, and expenses incident to placing the merchandise in condition, packed ready for shipment to the United States." Customs Administrative Act June 10, 1890, c. 407, § 19, 26 Stat. 139 [U. S. Comp. St. 1901, p. 1925]. The record does not disclose how comprehensive are these above-quoted items of charge. Undoubtedly they cover the cost of the material used and the labor employed in rolling and packing; but they may or may not include the remuneration of the individual who procured such work to be done and oversaw the doing of it. In other words, so much of the converter's individual services as are enumerated under Nos. 3 and 4, supra, may be included in these items, and it may not. Upon the familiar principle that it must be presumed that public officers act according to law, we must assume that such services are not included. Certainly so much of the converter's services as are enumerated under No. 5, supra, should be included in the market value. They enter into the production of the completed article, which is purchased abroad for importation here. There is nothing to show that these services are included in any item of charge. Apparently they are included in the 2½ per cent.

Upon this record we are not satisfied that the appraisement should be reduced by the 2½ per cent. which is the subject of protest, and therefore the decision of the Circuit Court is affirmed.

TOWNSEND, Circuit Judge, heard argument, participated in consultation, and voted to affirm, but did not see the opinion.

(154 Fed. 322.)

H. BAARS & CO. v. MITCHELL.

(Circuit Court of Appeals, Fifth Circuit. June 3, 1907.)

No. 1,628.

SALES—PASSING OF TITLE TO PROPERTY.

The owner of a sawmill entered into a contract to sell and deliver all the lumber of certain discriptions then on hand and all he should make during a specified time at stated prices; the contract providing that the purchasers should advance every 30 days 75 per cent. of the price of the lumber cut during the preceding month, and the remainder of the price, less freight, to be paid when the lumber was shipped and delivered. The seller was adjudicated a bankrupt, having in his yard at the time certain lumber of the kinds described in the contract, which had been separately piled, and for which bills had been presented to the purchasers, who had paid 75 per cent. of the price shown thereby. *Held*, that as to such lumber the sale was complete, and the title had vested in the pur-

Digitized by Google

chasers, who were entitled to possession of the same as against the trustee in bankruptcy.[1]

Petition to Revise Proceedings of the District Court of the United States for the Northern District of Florida, in Bankruptcy.

Jno. C. Avery for petitioner.

E. C. Maxwell and Lucius J. Reeves, for respondent.

Before PARDEE, McCORMICK, and SHELBY, Circuit Judges.

PARDEE, Circuit Judge. The facts in the case are that R. R. Cowan, the owner of a sawmill at Cowan, Fla., through his duly authorized agent, entered into the following contract with H. Baars & Co., of Pensacola, Fla., to wit:

Pensacola, Fla., Sept. 15th, '04.

Messrs. H. Baars & Co., Pensacola, Fla.—Gentlemen: Confirming verbal understanding with you, I confirm sale to you of all lumber of the following description now on hand at the mill of R. R. Cowan, Cowan, Fla., and all that he will manufacture during the next six months from this date, and at the prices named, as follows:

All crown of all sizes at.....$24 00 per M.
All prime, 4-4, 5-4, 6-4, and 2x9 at..... 16 00 " "
All heart face, 80% clear, 1x4, 4-1-2, 5, 6, and 7, at..... 20 00 " "
All heart face, " " 5-4x4, 4 1-2, 6 & 7, and 6-4x6.. 20 00 " "

Prices named as above include the delivery of the lumber on cars at Pensacola. Lumber to be cut by Mr. Cowan to conform as near as possible, without waste of material, with your requirements, and reports of amount of same cut during each month and on hand to be furnished you every thirty days.

Terms: In consideration of this agreement, you are to advance to me, as agent for R. R. Cowan, every thirty days, seventy-five per cent. of the delivered value of the lumber, including what is now on hand cut during each month in cash, and balance due on said lumber as shipped, after deducting R. R. Frt. charges.

It is also mutually agreed that Mr. Cowan will not make any more of the crown and prime size 2x9 than is practicable for him to cut, it being understood that you want as little of this size as possible, but as much of the 4-4, 5-4, and 6-4 as he can get.

It is understood that while Mr. Cowan's entire sawmill plant and product is under a mortgage to Wm. Fisher, or his assigns, and the State Savings Bank of Tallahassee of about $8,000.00 at the present time, that the mill and lumber is fully insured covering this amount and value of advance on lumber.

Please let me have your confirmation of the above, and oblige.

Yours very truly, Scarritt Moreno, as Agt. for R. R. Cowan.

Following the expiration of the six months, the parties continued dealings on substantially the same terms, and Cowan had cut in March, April, May, June, and July of 1905 about 200,000 feet of lumber intended for the Baars Company, which was separately piled and stacked in the millyards, and was known and designated as "Baars' lumber." On this lot of lumber Baars & Co. had under the contract paid 75 per cent. of the agreed price when Cowan, on August 23, 1905, on his own petition, was adjudicated a bankrupt. The payments for the lumber were made on bills presented for each month, and the following is a sample copy of the bill and receipt passed on each payment:

[1] See note at end of case.

Digitized by Google

Pensacola, Fla., Apr. 22, 1905.

H. Baars & Co., Bo't of Scarritt Moreno as Agt. for R. R. Cowan, lumber cut by R. R. Cowan for a/c of H. Baars & Co., from Mar. 19th to April 21st, 1905, all of same being in stock at mill of R. R. Cowan, Cowan, Fla.

[Here follow, detailed under proper heads, quality, sizes, quantity, with specific measurements, prices, with total amount of bill, to wit .....$1,007 06]

Credit.

75 per cent cash advances on a/c purchase price..... 755 30

Bal. due less Frt. to Pensacola.....$ 251 76

Rec'd payment.

R. R. Cowan, By S. Moreno, Agt.

The trustee in bankruptcy claimed the lumber as belonging to the estate. Baars & Co. claimed it as having been purchased under the contract. On the hearing in the bankruptcy court, the lumber was adjudged to belong to the bankrupt's estate, and Baars & Co. bring this petition for revision.

In Hatch v. Oil Co., 100 U. S. 124, 130, 25 L. Ed. 554, the law controlling this case is set forth with great clearness, and we quote at some length:

"Nothing was required at common law to give validity to a sale of personal property except the mutual assent of the parties to the contract. As soon as it was shown by competent evidence that it was agreed by mutual assent that the one should transfer the absolute property in the thing to the other for a money price, the contract was considered as completely proven and binding on both parties. If the property, by the terms of the agreement, passed immediately to the buyer, the contract was deemed a bargain and sale; but if the property in the thing sold was to remain for a time in the seller, and only to pass to the buyer at a future time or on certain conditions inconsistent with its immediate transfer, the contract was deemed an executory agreement. Contracts of the kind are made in both forms, and both are equally legal and valid; but the rights which the parties acquire under the one are very different from those secured under the other. Ambiguity or incompleteness of language in the one or the other frequently leads to litigation, but it is ordinarily correct to say that, whenever a controversy arises in such a case as to the true character of the agreement, the question is rather one of intention than of strict law; the general rule being that the agreement is just what the parties intended to make it, if the intent can be collected from the language employed, the subject-matter, and the attendant circumstances. Where the specific goods to which the contract is to attach are not specified, the ordinary conclusion is that the parties only contemplated an executory agreement. Reported cases illustrate and confirm that proposition, and many show that where the goods to be transferred are clearly specified, and the terms of sale, including the price, are explicitly given, the property, as between the parties, passes to the buyer, even without actual payment or delivery. 2 Kent, Com. (12th Ed.) 492; Tome v. Dubois, 6 Wall. (U. S.) 548, 554, 18 L. Ed. 943; Carpenter v. Hale, 8 Gray (Mass.) 157; Martineau v. Kitching, Law Rep. 7 Q. B. 436, 449; Story, Sales (4th Ed.) § 300. Standard authorities also show that, where there is no manifestation of intention, except what arises from the terms of sale, the presumption is, if the thing to be sold is specified and it is ready for the immediate delivery, that the contract is an actual sale, unless there is something in the subject-matter or attendant circumstances to indicate a different intention. Well-founded doubt upon that subject cannot be entertained if the terms of bargain and sale, including the price, are explicit; but when the thing to be sold is not specified, or if when specified something remains to be done to the same by the vendor, either to put it into a deliverable state, or to ascertain the

Digitized by Google

price, the contract is only executory. In the former case, there is no reason for imputing to the parties any intention to suspend the transfer, inasmuch as the thing to be sold and the price have been specified and agreed by mutual consent, and nothing remains to be done. Quite unlike that, something material remains to be done by the seller in the latter case before delivery, from which it may be presumed that the parties intended to make the transfer dependent upon the performance of the things yet to be done. Suppose that is so, still every presumption of the kind must yield to proof of a contrary intent, and it may safely be affirmed that the parties may effectually agree that the property in the specific thing sold, if ready for delivery, shall pass to the buyer before such requirements are fulfilled, even though the thing remains in the possession of the seller.

"Where a bargain is made for the purchase of goods, and nothing is said about payment or delivery, Bailey, J., said the property passes immediately, so as to cast upon the purchaser all future risk, if nothing remains to be done to the goods, although he cannot take them away without paying the price. Simmons v. Swift, 5 B. & C. 857. Sales of goods not specified stand upon a different footing; the general rule being that no property in such goods passes until delivery, because until then the very goods sold are not ascertained. But where by the contract itself the vendor appropriates to the vendee a specific chattel, and the latter thereby agrees to take the same and to pay the stipulated price, the parties, says Parke, J., are thus in the same situation as they would be after a delivery of goods under a general contract, for the reason that the very appropriation of the chattel is equivalent to delivery by the vendor, and the assent of the vendee to take the specific chattel and to pay the price is equivalent to his accepting possession. Dixon v. Yates, 5 Barn. & Adol. 313, 340; Shep. Touch. 224. When the agreement for sale is of a thing not specified, or for an article not manufactured, or of a certain quantity of goods in general, without any identification of them or an appropriation of the same to the contract, or when something remains to be done to put the goods into a deliverable state, or to ascertain the price to be paid by the buyer, the contract is merely an executory agreement, unless it contains words warranting a different construction, or there be something in the subject-matter or the circumstances to indicate a different intention. Benjamin, Sales (2d Ed.) 257; Blackburn, Sales, 151; Young v. Matthews, Law Rep. 2 C. P. 127–129; Logan v. Le Mesurier, 6 Moore, P. C. C. 116; Ogg v. Shuter, Law Rep. 10 C. P. 159–162; Langton v. Higgins, 4 H. & N. 400; Turley v. Bates, 2 H. & C. 200–208."

In the light of this high authority, it seems that, in the present case, all the requisites to a binding sale were complied with. There was an undisputed agreement for one party to sell, and another to buy. The thing was specially designated, described, and segregated, the price was fixed, and payments were made as agreed. Although the agreement may have been to some extent executory, it being for the purchase and sale of all lumber of a certain description "now on hand at the mill of R. R. Cowan, Cowan, Fla., and all that he will manufacture" during a specified period, yet when the lumber was manufactured and segregated, and the bills of sale with full details of description were presented and accepted, and payment made according to the contract, there was a complete sale of the property designated in the bills, and the title thereto at once vested in Baars & Co.; and this notwithstanding, under the contract, it remained with Cowan to deliver the lumber at Pensacola and for Baars & Company to pay the balance of the price, less railroad freight on delivery. As between Cowan and Baars & Co. there does not seem room for question as to the rights of the parties. Of course, in the matter now before us, the trustee of Cowan's estate in bankruptcy stands in Cowan's shoes.

Digitized by Google

The trustee, however, contends that in the present case the title did not pass, because the delivery was not made, the lumber had not been inspected, and the insurance clause in the six months' contract indicates that the title was to remain in Cowan. As to the delivery, it is disposed of by Hatch v. Oil Co., supra; and see McElwee v. Metropolitan Lumber Co., 69 Fed. 305, 16 C. C. A. 232, where, in a case involving a contract in many respects similar to this, Judge Lurton disposes of the questions of delivery, insurance, and inspection. Under the present contract, no inspection was provided for, and none was necessary, further than for the correction of errors. As to the insurance provided for in the six months' contract, it is difficult to see why Baars & Co. should stipulate for insurance, except for their own protection, and Scarritt Moreno, Cowan's agent, testifies that the understanding was that the insurance made was to be for Baars' benefit. However these details may be, the case is clear as to purchase and sale of the property, and, in our opinion, the title fully passed.

The petition for revision in this case is allowed, and it is ordered, adjudged, and decreed that the order of the District Court of the 19th of September, 1906, be reversed; that the petition of H. Baars & Co. be allowed and granted; that the 198,445 feet of lumber described in his said petition was, at the time, the property of H. Baars & Co., and the trustee of R. R. Cowan, as such, was never entitled to the possession thereof; and, accordingly, that the petition of said R. F. Mitchell, trustee, be, and the same is, dismissed. The costs of this court and the bankruptcy court to be paid by said trustee out of funds belonging to the estate in bankruptcy.

NOTE.

Transfer of Title as Dependent on Appropriation by Seller.

[a] (U. S. 1893) A foreign merchant contracted for several cargoes of lumber, to be delivered free on board ship, seasoned when delivered, within seven months from May 1st, certain advances to be made about June 1st. These advances were made, and the first cargo was prepared by August, piled by itself in the seller's yard, and the buyer notified of readiness. The latter had difficulty in chartering ships, and later the seller's mill and all the lumber were burned. *Held*, that the title to the lumber had not passed.—Schreyer v. Kimball Lumber Co., 54 Fed. 653, 4 C. C. A. 547, 13 U. S. App. 23.

[b] (Ark. 1907) A contract for the sale of timber bound the seller to let the buyer have all the timber controlled by the seller, and bound the seller to haul and load the same on board of cars within 50 miles of a designated town for a specified sum per 1,000 feet, and bound the buyer to furnish a specified sum to the seller in advance. *Held*, that the contract was a present sale of timber, with an agreement for future services concerning the same, and wherever logs were cut within 50 miles of the designated town by the seller they became the property of the buyer.—St. Louis, I. M. & S. R. Co. v. Wynne Hoop & Cooperage Co., 99 S. W. 375.

[c] (Colo. 1894) Since the appropriation by the seller of an article according to the terms of an executory contract of sale passes title without the assent of the buyer, an action for the agreed price may thereupon be maintained, though the buyer refuses to complete the contract.—Colorado Springs Live-Stock Co. v. Godding, 20 Colo. 249, 38 Pac. 58.

[d] (Fla. 1858) A sale of personal property, as of hogs, is not complete without delivery, identification, or discrimination, and it is the duty of the vendor to make this, unless otherwise agreed.—Stafford v. Anders, 8 Fla. 34.

Digitized by Google

[e] (Ky. 1893) In an action by tobacco warehousemen and factors for the purchase price of 68 hogsheads of tobacco destroyed by fire while in plaintiffs' warehouse, it appeared that defendant agreed to take the tobacco on the terms and at the price proposed by plaintiffs; that on the day of the alleged sale 10 hogsheads of the same were weighed and placed on plaintiffs' brakes for auction sale, but withdrawn at defendant's request; that on the same day plaintiffs ascertained the net weight of each of the 68 hogsheads, made entries thereof on their books, and prepared invoices ready for defendant; that the latter had previously seen and was well acquainted with the whole lot of tobacco; that, though it was the individual property of plaintiffs, and sold privately, the contract was made with reference to, and knowledge by the parties of, the general and uniform custom of the tobacco trade in L., where it was made, and that they intended to be governed thereby, as if it had been sold by plaintiffs as commission merchants. *Held*, that the title to the tobacco was vested in defendant.—Thompson v. Brannin, 94 Ky. 490, 21 S. W. 1057.

[f] (Mass. 1836) Where the owner of a large number of barrels of beef, all of equal value and all in one parcel, sold a certain number of them to the plaintiff and received the price, and a certain number to B., and reserved the rest for himself, and delivered them all to the agent of the vendees, and afterwards B. took away the number sold to him, and the vendor took away the number reserved, it was *held* that, upon such separation, the barrels remaining in the hands of such agent vested in the plaintiff.—Valentine v. Brown, 35 Mass. (18 Pick.) 549.

[g] (Mass. 1861) A purchase of goods which are designated and set apart by the seller, and paid for, and a part of which are actually removed by the purchaser's order, is sufficient to vest the property in the purchaser, as between the parties, although he has never seen the goods.—Rice v. Codman, 83 Mass. (1 Allen) 377.

[h] (Mass. 1896) Where a person accepts by telegram another's offer to sell him certain goods at a stated price, and the seller thereupon sets apart and appropriates to the purchaser the goods called for, and sends him the bill, the sale is complete.—Mitchell v. LeClair, 165 Mass. 308, 43 N. E. 117.

[i] (Mass. 1896) Under an agreement for the sale of all of a certain grade of wool produced by plaintiff's mills during 30 days, plaintiff weighed the product of each day, but did not separate it from that produced at other times, and on a shipment to the buyer sent a larger quantity than that made under the contract, all of which was rejected. *Held* that, the wool covered by the contract not having been separated and set apart so that it could be identified from other wool of plaintiff, there was no delivery, and the title to none passed to the buyer so as to support an action for goods sold and delivered.—New England Dressed Meat & Wool Co. v. Standard Worsted Co., 165 Mass. 328, 43 N. E. 112, 52 Am. St. Rep. 516.

[j] (Mass. 1907) Where plaintiff at his own expense delivered at his shipping point on board cars coal of the description respondent agreed to buy and pay for, the title passed, and respondent owed the contract price.—Cox v. Andersen, 80 N. E. 236.

[k] (Mich. 1888) Where a contract for the sale of a stock in a store specifies that the vendor excepts and reserves from the stock whatever the same may inventory above $4,500, which excess the vendor is to take from the stock, and payment is to be made in land and money as soon as the inventory is completed—the delivery of the goods, and payment in the mode specified in the contract, to be simultaneous—and the result of the inventory showed an excess in value over the $4,500, there can be no delivery so as to pass the title until such vendor has taken out the goods excepted and reserved in excess of $4,500. —Pierson v. Spaulding, 67 Mich. 640, 35 N. W. 699.

[l] (Minn. 1892) On an order for a specified quantity of twine to be shipped on a specified day, the separation of the quantity from the seller's general stock, and shipping it before the specified day, is not an appropriation of the quantity separated to the contract, so that the title passes.—Hoover v. Maher, 51 Minn. 269, 53 N. W. 646.

[m] (Mo. 1907) A contract to sell personal property which is not specific or designated is purely executory until the property is designated or segregat-

Digitized by Google

ed, and the purchaser gets no title until this has been done.—American Metal Co. v. Daugherty, 102 S. W. 538.

[n] (N. M. 1891) In an action for the price of goods ordered by mail and burned in the house of the buyer, it being a disputed question whether the buyer ordered specific kinds of goods, or left the selection to the seller, it was proper to charge that, if a buyer orders goods and permits the seller to select them, the buyer is responsible, whether the goods sent suited him or not; but if he specifies the goods wanted, and the goods sent are not in accordance therewith, and he immediately notifies the seller thereof, and that he will not accept them, and then the seller directs him to hold them, the buyer is not responsible.—Cerf v. Badaraco, 6 N. M. 214, 27 Pac. 504.

[o] (N. C. 1853) A. bought of B. a distiller, 300 barrels of rosin, to be delivered "when called for next week," and paid for it. Within the week, B. manufactured, and had on hand at his distillery, more than the above quantity of rosin; but A. did not call for it within the week, and afterwards the rosin and distillery were burnt. *Held*, that A. was bound to call for the rosin within the next week; that B. was not bound to set apart for A. any particular 300 barrels; that, A. having failed to perform his part of the contract, the rosin remained at his risk, and the loss must be borne by him.—Willard v. Perkins, 44 N. C. 253.

[p] (Pa. 1896) A vendee directed the vendor to ship certain enumerated articles by freight to P., "all to be delivered in 60 days; shipments made as called for." The vendor packed the goods and set them aside in the factory, and rendered the vendee an invoice for them. *Held*, that the law would import delivery in accordance with the terms of the order for the goods at the end of 60 days from its date.—Pittsburg Glass Co. v. Doubleday, 2 Pa. Super. Ct. 170.

[q] (S. C. 1849) A. sold to B. 625 bags of corn, which was a portion of a larger quantity which A. had previously purchased, and which was to be delivered to A. at the railroad depot in Charleston, and A. gave to B. the following delivery order: "Mr. C. D., Agent Railroad Company—Sir: Please deliver to B. 625 bags of corn, consigned to me, and oblige. A. P. S. I am not certain that all the corn has arrived at the depot; but, when it comes, let B. have it. January 25, 1847." When the corn had arrived, B. tendered to A. the purchase money, and demanded the corn; but A. refused to let him have it. *Held*, that the order sufficiently identified the corn as being the first 625 bags that should arrive, and transferred to B. the right of property therein, and gave him such constructive possession as would enable him to maintain trover therefor, on demand and refusal.—Sahlman v. Mills, 3 Strob. 384, 51 Am. Dec. 630.

(154 Fed. 770.)

UNITED STATES v. WALSH.

(Circuit Court of Appeals, First Circuit. July 2, 1907.)

No. 702 (1,849).

CUSTOMS DUTIES—CLASSIFICATION—PROVISO—WOOL GOODS.

In construing Tariff Act July 24, 1897, c. 11, § 1, Schedule L, par. 391, 30 Stat. 187 [U. S. Comp. St. 1901, p. 1670], relating to "all manufactures * * * of which silk is the component material of chief value," and containing a proviso that "all manufactures of which wool is a component material shall be classified and assessed for duty as manufactures of wool," *held*, that the ordinary rule should be applied that a proviso at the close of an independent paragraph like this should be construed as limiting only what precedes it, and that the words "all manufactures" in the proviso have no broader relation than the same words in the beginning of the paragraph.

Appeal from the Circuit Court of the United States for the District of Massachusetts.

For opinion below, see 154 Fed. 749.

Digitized by Google

William H. Garland, Asst. U. S. Atty. (Asa P. French, U. S. Atty., on the brief).

Norman W. Bingham (Bingham, Smith & Hill, on the brief), for importer.

Before COLT and PUTNAM, Circuit Judges, and ALDRICH, District Judge.

PUTNAM, Circuit Judge. This case turns on the construction of the proviso which concludes paragraph 391 of the customs act of July 24, 1897, c. 11, § 1, Schedule L, 30 Stat. 187 [U. S. Comp. St. 1901, p. 1670], which paragraph is as follows:

"391. All manufactures of silk, or of which silk is the component material of chief value, including such as have india-rubber as a component material, not especially provided for in this act, and all Jacquard figured goods in the piece, made on looms, of which silk is the component material of chief value, dyed in the yarn, and containing two or more colors in the filling, fifty per centum ad valorem; Provided: that all manufactures, of which wool is a component material, shall be classified and assessed for duty as manufactures of wool."

The United States maintain that this paragraph is to be construed to cover all manufactures of which wool is a component material to the same extent as though the paragraph was a separate section of the act in question, and disconnected from the position which it occupies in "Schedule L—Silks and Silk Goods." If the United States are correct, the judgment of the Circuit Court must be reversed; otherwise it must be affirmed. A full statement of the circumstances is found in the opinion of the learned judge of the Circuit Court, to which we refer for any additional information required, and in which we concur. The Board of General Appraisers decided in favor of the importer, but the paragraph which we have quoted was not referred to by them. Apparently the United States made before them no claim arising out of it, and it certainly cannot be said that there has been any practical construction or application of the proviso which supports their present contention. On the other hand, the learned judge of the Circuit Court observes as follows:

"Whatever interpretation be given to the proviso of paragraph 391, I cannot think that it was intended to control the language of all the other paragraphs of the tariff act and to make many of them nugatory, as is contended by the government."

According to the ordinary rule, a proviso at the close of a section, or of an independent paragraph like that now before us, is to be construed as only limiting, or as being limited by, what precedes it therein. Of course, there are some necessary exceptions to the rule, the latest statement of each of which is found in United States v. Falk, 204 U. S. 143, 149, 150, 27 Sup. Ct. 191, 51 L. Ed. 411. In view of the sweeping results explained by the learned judge of the Circuit Court which would follow from not applying the general rule to the present case, we must hold that it does so apply, and that the words "all manufactures" found in the proviso should be held to be only a repetition of the same words with which the paragraph begins, and as having absolute relation thereto.

The judgment of the Circuit Court is affirmed.

Digitized by Google

(154 Fed. 769.)

Ex parte CRAWFORD.

(Circuit Court of Appeals, Third Circuit. April 5, 1907.)

No. 1,013.

1. COURTS—FEDERAL COURTS—PROCEDURE IN AID OF EXECUTION.

The remedy given to a judgment creditor by Act Pa. July 12, 1842 (P. L. 339), by the arrest and imprisonment of the defendant on a showing of fraudulent removal or concealment of his property, is one "to reach the property of a judgment debtor" within the meaning of Rev. St. § 916 [U. S. Comp. St. 1901, p. 684], and under said section is available in the federal courts.

[Ed. Note.—For cases in point, see Cent. Dig. vol. 13, Courts, § 936.]

2. BANKRUPTCY—EFFECT OF BANKRUPTCY ACT ON STATE INSOLVENCY LAWS—ARREST OF JUDGMENT DEBTOR.

Act Pa. July 12, 1842 (P. L. 339), which authorizes the arrest and imprisonment of a judgment debtor on a showing that he is about to remove or has concealed property with intent to defraud his creditors, is not an insolvency law of the state, although it provides that the debtor may be released on his giving a bond that he will apply within 30 days for the benefit of such law and comply with its requirements, but merely provides a remedy in aid of execution, and its operation is not suspended by the national bankruptcy act.

[Ed. Note.—Effect of national bankruptcy act on state insolvency laws and on assignments for benefit of creditors, see note to Carling v. Seymour Lumber Co., 51 C. C. A. 11.]

On Writ of Habeas Corpus and Return Thereto.

For opinion below, see 154 Fed. 761.

Seth I. McCormick, for petitioner.

A. L. Cole, opposed.

Before DALLAS, GRAY, and BUFFINGTON, Circuit Judges.

DALLAS, Circuit Judge. The United States District Judge for the Middle District of Pennsylvania, sitting in the Circuit Court for that district, awarded a warrant of arrest under the Pennsylvania statute of July 12, 1842 (P. L. p. 339), in pursuance whereof George H. Crawford was committed to jail. The jurisdiction of the Circuit Court to do this being denied, we allowed a writ of habeas corpus, and upon its return the case thereby presented was argued by counsel, and having been duly considered by us, is now for adjudication. It should be promptly disposed of, and to avoid delay we will but briefly state the grounds of our decision.

The contention on behalf of the prisoner appears to be that authority was not given to the federal courts to issue the process which was issued in this instance, either by section 914, or 915, or 916 of the Revised Statutes [U. S. Comp. St. 1901, p. 684], and that, even if it had been, such authority would not presently exist, because, as is argued, the enactment by Congress of the bankruptcy act of 1898 (Act July 1, 1898, c. 541, 30 Stat. 544 [U. S. Comp. St. 1901, p. 3418]) suspended the Pennsylvania act of July 12, 1842. Neither of these positions is tenable. A judgment had been recovered in a common-law cause, and the warrant of arrest, being a remedy provided by the state law "to reach the property of the judgment debtor," was, we think, plainly within section 916. The cases relied upon by the learned counsel of the prisoner are not in point. In Friedly v. Giddings

Digitized by Google

et al., 119 Fed. 438, the court was dealing with a motion for an adjudication that, by reason of the character of the cause of action, the defendants ought to be confined to jail, according to the statutes of the state It was not dealing with a remedy upon a judgment, by execution or otherwise, to reach the property of the judgment debtor. The state statute under consideration in Curtis v. Feste, 6 Fed. Cas. 1004, Fed. Cas. No. 3,502, was in a very high degree penal. It did not provide a remedy to reach property, but made it "the duty of the court, in all cases described in it except one, upon conviction of the debtor, to sentence him to three years' imprisonment, and in the other case, to sentence him to the same term of imprisonment, with a condition that he should be discharged on payment of the debt."

The Pennsylvania statute of July 12, 1842, is not an insolvent law. The proceeding it provides is not designed to effect the distribution of the debtor's assets amongst his creditors. It is a proceeding in aid of execution. Its object is to reach property of a judgment debtor which he fraudulently conceals. The case of Commonwealth v. O'-Hara, 6 Phila. 402 (cited for the prisoner), was decided by a Pennsylvania court of first instance, and the learned judge by whom that decision was rendered afterwards became a justice of the court of last resort of that state, and as such participated in its unanimous judgment in the case of Scully v. Kirkpatrick, 79 Pa. 324, 21 Am. Rep. 62. This adjudication, and others which need not be particularly referred to, accord with our present conclusion.

The order of this court is that George H. Crawford be remanded to the custody of the keeper of the common jail of Lycoming county, there to be detained in pursuance of and in accordance with the order of the Honorable R. W. Archbald, United States District Judge for the Middle District of Pennsylvania.

NOTE.—Motion for leave to file petition for a writ of habeas corpus denied 27 Sup. Ct. 795, 206 U. S. 561, 51 L. Ed. 1189.

(154 Fed. 839.)

TWO HUNDRED AND EIGHTEEN AND ONE-HALF CARATS LOOSE EMERALDS v. UNITED STATES.

(Circuit Court of Appeals, Second Circuit. June 5, 1907.)

No. 295.

CUSTOMS DUTIES—FORFEITURE—"BAGGAGE"—ARTICLES IN CLOTHING.

Held, that articles in the clothing are "baggage," within the meaning of section 2802, Rev. St. [U. S. Comp. St. 1901, p. 1873], relating to the concealment of dutiable articles "found in the baggage of any person arriving within the United States," and that a package of precious stones found in the pocket of a passenger is forfeitable under said provision.

In Error to the District Court of the United States for the Southern District of New York.

This cause comes here upon writ of error by the claimant of certain loose, unpierced, cut emeralds to review a judgment of forfeiture for violation of the revenue laws. The judgment was entered October 3, 1906, in the District Court, Southern District of New York. Upon completion of the testimony, a verdict was directed in favor of the government; both sides having moved for a direction. Subsequently, upon motion for a new trial, the district judge

Digitized by Google

filed an opinion, which is reported in 153 Fed. 643. It contains the following statement of acts, which the testimony shows to be accurate:

"The claimant, Suarez, a resident of Bogota, in the Republic of Colombia, South America, arrived in New York on October 3, 1906, on the steamship Oceanic, from England. His native language was Spanish. He could not speak English, but had some knowledge of the French language, although how much does not clearly appear. On the arrival of the ship, the customs officer, who took the declarations of the passengers, asked him, in French, if he understood French, and he said that he did. He asked him how many pieces of baggage he had, and he answered, 'Three.' The examiner testified that he did not seem to clearly understand his questions as to what particular kind of baggage he had. The examiner thereupon drew his pen through the printed form on the declaration for the insertion of the number of trunks, bags or valises, boxes, and other packages, and wrote under the head of 'Total,' at the end, the figure '3.' The officer asked him, in French, whether he had anything to declare, whether he had any gifts for other persons, and whether he had anything to sell, to all of which he answered, 'No.' Thereupon Suarez signed his name at the end of the declaration, and swore to it before the officer. Suarez then left the ship and went on the dock. He had as baggage a trunk, a box, and two handbags tied together. He stated to the customs officer on the dock that he was going to Colombia, that he wished to leave with the collector the trunk and the box, and that he wished to take with him while in this country the two bags. They were thereupon opened, the contents examined, and found to contain nothing dutiable, and were labeled by the customs inspector as being passed. The customs inspector then called another inspector, who spoke Spanish, and directed him to ask Suarez whether he had any precious stones or jewelry upon his person or in his pockets. The inspector did so in Spanish, putting various specific and particular inquiries, and to all of them Suarez answered in the negative. He was then taken on board the steamer and searched, and in the pocket of his overcoat was found a package which contained cut emeralds loose and unpierced weighing 218½ carats, which were thereupon seized by the government, and which are the subject of this suit for confiscation."

Louis J. Phillips, for plaintiff in error.

Henry L. Stimson, U. S. Atty., Winfred T. Denison and Felix T. Frankfurter, Asst. U. S. Attys.

Before LACOMBE, TOWNSEND, and COXE, Circuit Judges.

LACOMBE, Circuit Judge (after stating the facts). The information sets forth four alleged causes of forfeiture. It will be necessary only to consider the second one, which charges a violation of the provisions of section 2802, Rev. St. U. S. [U. S. Comp. St. 1901, p. 1873]. That section reads as follows:

"Sec. 2802. (Penalty for concealing dutiable articles in baggage). Whenever any article subject to duty is found in the baggage of any person arriving within the United States, which was not, at the time of making entry for such baggage, mentioned to the collector before whom such entry was made, by the person making entry, such article shall be forfeited, and the person in whose baggage it is found shall be liable to a penalty of treble the value of such article."

The contention of the claimant is that articles of merchandise found on the person of a passenger cannot be forfeited under this section, which deals with baggage only. The district judge, after some reference to the common-law meaning of the word baggage, held:

"That such merchandise may be treated as baggage within the sense of the customs laws. A package carried in the pocket does not differ essentially from a package carried in the hand, and, in my opinion, if it contains duti-

Digitized by Google

able merchandise, the passenger is bound to declare it in all respects the same as he is bound to declare merchandise contained in his trunk."

Certainly, neither the size of a package nor the material of which the covering is made, whether wood, leather, or paper, is material. There is no sound distinction between articles carried in a dress suit case and articles carried in the small wrist bag which in feminine attire has taken the place of the undiscoverable pocket of a few decades ago. Nor is there any distinction between articles in the pocket of an overcoat worn on the owner's back and articles in the same pocket when the overcoat is rolled up with steamer rugs, a cardigan jacket, and an umbrella, and carried in a shawl strap. Such fine distinctions seem wholly without merit, especially in view of the circumstance that the section does not provide for articles found "in packages of baggage," but "in the baggage of any person arriving," etc. It is unnecessary to discuss the question further in view of former deliverances of this court. In U. S. v. One Pearl Necklace (Dodge) 111 Fed. 165, 49 C. C. A. 287, 56 L. R. A. 130, we held that section 2802 was applicable to jewelry wrapped up in a handkerchief and carried in a lady's small handbag, and in so doing discussed at great length the various sections relating to the introduction into this country of articles brought from abroad. Referring to this decision in the subsequent case of One Pearl Chain v. U. S. (Dullas) 123 Fed. 374, 59 C. C. A. 499, we said:

"Upon the trial and argument of the case at bar it seems to have been assumed that this court held that a passenger's wearing apparel, articles of adornment, and personal effects ceased to be baggage the moment they were taken out of the trunk and placed on the person of the passenger, and were to be treated, for purposes of entry, etc., as imported merchandise. It is true that the opinion, in contradistinction to 'merchandise,' spoke of dutiable articles brought by passengers 'in their packages of baggage'; but Mrs. Dodge brought her necklace in one of her packages of baggage, in a hand satchel, which, however, she failed to declare. There being no question of wearing the article, and nearly all dutiable articles coming in packages of some sort, the above-quoted phrase was used. To hold that an incoming passenger, who, arriving on a cold day, opens one of his packages of baggage and takes out a silk muffler to wrap around his neck, would be subject to have the same forfeited, although he may declare it to the customs officers, because he walked ashore with it without presenting invoice, bill of lading, and consular certificate, and obtaining a special permit, seems to us a most unreasonable proposition. The Dodge Case held only that the 'merchandise' sections did not apply to passenger's baggage. It did not undertake to define 'baggage.' No such question arose in the case. Nobody disputed that the necklace in that case was passenger's baggage, to be declared and entered as such."

And on the last appeal in the Dullas Case, 139 Fed. 516, 71 C. C. A. 500, reference was again made to the same subject, as follows:

"On the former appeal we held that a passenger's wearing apparel, articles of adornment, and personal effects did not cease to be baggage the moment they were taken out of a trunk and placed on the person. Whether they are hid from view by being stowed in the middle of a trunk, or by being placed under some part of the passenger's clothing, is immaterial."

Claimant relies upon two decisions only. U. S. v. Pearl Chain (D. C.) 139 Fed. 517, 71 C. C. A. 500, is a minority opinion. In U. S. v. Tapestry (D. C.) 114 Fed. 496, the facts are not fully reported; but the articles had apparently been smuggled through the custom

Digitized by Google

house, and were not found until after the claimant had ceased to be "a person arriving," and what he brought with him had ceased to be baggage.

The judgment is affirmed.

NOTE.—TOWNSEND, Circuit Judge, heard argument, participated in consultation, and voted to affirm, but did not see the opinion.

(154 Fed. 842.)

ENNIS v. UNITED STATES.

(Circuit Court of Appeals, Second Circuit. May 30, 1907.)

No. 259.

POST OFFICE—EMBEZZLEMENT OF MAIL MATTER—DECOY LETTERS.

A post office superintendent discovered a misboxed letter, which had been placed in a "dead" pigeonhole at the top of the case, where defendant, a clerk, was engaged in sorting mail. The letter was removed by the superintendent and handed to a post office inspector, who took it to the addressee, and, without delivering it, obtained permission to open it. He then returned to the post office, unsealed the letter, and took from it an express order for $2, a statement of account, and a letter from the sender of the money order. After making a copy of the letter, he placed it in the envelope with two marked $1 bills, and forwarded the money order and the statement to the addressee. The envelope containing the letter and bills having been duly sealed was returned to the dead pigeonhole, and a short time thereafter was embezzled by defendant. *Held*, that the letter at the time it was returned by the inspector to the dead pigeonhole had not ceased to be mail matter, and that defendant was therefore properly convicted of embezzling a letter containing inclosures, in violation of Rev. St. § 5467 [U. S. Comp. St. 1901, p. 3691].

[Ed. Note.—For cases in point, see Cent. Dig. vol. 40, Post Office, § 61.]

In Error to the Circuit Court of the United States for the Eastern District of New York.

On writ of error to the Circuit Court for the Eastern District of New York to review a judgment of conviction entered upon the verdict of a jury; the indictment charging the defendant (plaintiff in error) with having secreted, embezzled and destroyed a letter containing two silver certificates, each of the value of one dollar, in violation of the provisions of Rev. St. U. S. § 5467 [U. S. Comp. St. 1901, p. 3691].

W. L. Carey (Robert H. Roy, of counsel), for plaintiff in error.

William J. Youngs (S. B. Strong, Asst. U. S. Atty., and Chas. E. Hill, of counsel), for the United States.

Before LACOMBE, TOWNSEND, and COXE, Circuit Judges.

COXE, Circuit Judge. At the time in question the defendant was a clerk in the Brooklyn Post Office, at Station D. On the 27th of March, 1906, the attention of the superintendent was called to a misboxed letter, addressed to Cowperthwait & Co., Flatbush Avenue and Fulton Street, Brooklyn, which had been placed in a "dead" pigeon hole at the top of the case where defendant worked. The letter had been postmarked

Digitized by Google

and the stamp canceled. The superintendent removed the letter from the case and handed it to Inspector Leland in the main post office building at Brooklyn. Leland took the letter to Cowperthwait & Co. and obtained permission of the treasurer to open it; he then returned to the post office, unsealed the letter, took from it an express money order for $2, a statement of account and a letter from the sender of the money order. After making a copy of the letter he replaced it in the envelope with two marked one dollar bills. The money order and the statement of account he forwarded to Cowperthwait & Co.

In the afternoon the envelope, duly sealed, containing the letter and the two bills, was placed by the superintendent in the dead pigeonhole where he had found it. A short time afterward the defendant resumed work at the case, and, as the letter was neither in the pigeonhole nor in the outgoing mail, he was questioned regarding it. Although at first he denied any knowledge of the letter he produced from his pocket, in response to a demand from the inspector, the two marked bills and subsequently admitted having taken them.

Briefly stated these are the facts; there is no dispute regarding them. No testimony was offered by the defendant.

The sole question presented is one of law which may be epitomized as follows: Was the letter in question mail matter intended to be conveyed by mail?

The argument for the defendant proceeds, we think, upon a misconception of the facts. It is insisted that the inspector delivered the letter to Cowperthwait & Co. and that thereupon it ceased to be mail matter. It is also argued that the envelope which the superintendent placed in the dead pigeonhole was not in a fit condition for mailing, for the reason that it had on it a canceled stamp and was not deposited in a place designed for matter intended to be carried by mail.

In short, the case is treated as if the first appearance of the letter was on the afternoon of the 27th when it was placed in the dead pigeonhole by the superintendent, Carroll. Here, we think, is the initial mistake which has tended to obscure the issue both in this court and in the court below. In our opinon the letter never was delivered to Cowperthwait & Co. and remained at all times in the custody and under the control of the post office officials. The inspector exhibited the letter to the treasurer of Cowperthwait & Co., but he did not deliver it to them. He obtained permission to open it and became their agent for that purpose; it was never out of his possession. It was still sealed when he returned to the post office and he opened it there.

The letter did not lose its mailable character or the protection of the laws of the United States because a part of the contents of the envelope had been removed. The only individuals who could be injured by the action of the inspector in this regard were Cowperthwait & Co. and they had given their full consent. Even if we assume that the action of the officials was illegal, the letter was still lawfully in the post office; it did not become a defenceless outlaw to be plundered with impunity by those whose duty it was to guard it. In other words, the illegal act of the inspector and superintendent, admitting it to exist, is no defense to the defendant. But, as before stated, we think these officers acted within the scope of their authority and that the letter from

Digitized by Google

the moment it entered Station D until it was embezzled by the defendant was mail matter under the protection of the law. It was intended to be conveyed by mail and would have been delivered in due course had not the defendant first secreted it and then embezzled and destroyed everything but the money it contained.

If the contention of the defendant be correct, a letter delivered at the wrong address and remailed with the canceled stamp thereon could be stolen by a person employed in the postal service without fear of punishment under section 5467, Rev. St. [U. S. Comp. St. 1901, p. 3691]. So, too, if the postmaster at the request of the sender should, after mailing, open the envelope and take therefrom a paper placed therein by mistake, the letter, after being replaced in the mail pouch, would lose the protection of the statute. Furthermore, the above contention would make the use of test letters impossible when prepared with a canceled stamp in an office other than the suspected one and subsequently placed by the inspector within reach of the distrusted official.

We cannot believe that Congress intended the section in question to have so restricted an application. On the contrary, we think it applies to all matter which lawfully comes into the possession of the department regarding which the postal authorities are required by law to exercise some act of dominion or control.

The case was submitted to the jury upon a theory more favorable to the defendant than the facts warrant. The court, upon the supposition that the replacing of the letter in the pigeonhole was the first and only mailing to be considered, left it for the jury to say whether it was "intended to be conveyed and was in the course of transmission to Cowperthwait & Co.," stating that the jury might find this issue against the United States notwithstanding the presumption allowed by section 5468.

We are convinced that no reversible error was committed at the trial. Upon the interpretation most favorable to the defendant the testimony is much stronger for the Government than in many cases in which the Supreme Court has sustained convictions.

In Montgomery v. United States, 162 U. S. 410, 16 Sup. Ct. 797, 40 L. Ed. 1020, the court said:

> "The letters put in evidence correspond, in address and contents, to the letters described in the indictment, and it made no difference, with respect to the duty of the carrier, whether the letters were genuine or decoys with a fictitious address."

See, also, Scott v. U. S., 172 U. S. 343, 19 Sup. Ct. 209, 43 L. Ed. 471; Goode v. U. S., 159 U. S. 663, 16 Sup. Ct. 136, 40 L. Ed. 297.

The judgment is affirmed.

Digitized by Google

(154 Fed. 657.)

In re WATERLOO ORGAN CO.

(Circuit Court of Appeals, Second Circuit. June 5, 1907.)

No. 254.

1. BANKRUPTCY—CLAIMS—COLLATERAL BONDS.
Where bonds executed by a bankrupt were deposited with a bank as collateral for past and future indebtedness, the bank was required to elect whether it would make the bonds valid by allowing the notes for which the bonds were collateral to be covered into the bankrupt's estate, or press its claim as a general creditor on the notes, leaving the bonds without consideration; it not being entitled to prove the bonds as a secured claim without surrendering the notes.

2. SAME—FORECLOSURE OF MORTGAGE—INTEREST ON FUNDS.
A bankrupt corporation, having issued bonds secured by a mortgage, which after bankruptcy was conceded to be valid as to two-fifths of the property, but was contested by the trustee as to the remainder, the mortgagee, having retained possession of the proceeds of the property on foreclosure sale pending determination of the ownership thereof, was chargeable with interest at 3 per cent. on the entire proceeds during its possession.

3. SAME—TRUSTEE FOR BONDHOLDERS—LITIGATION—EXPENSE.
After the bankruptcy of a corporation having issued bonds secured by a mortgage payable to a bank as trustee, it was agreed that the mortgage was valid as to two-fifths of the property, but was contested by the trustee in bankruptcy as to the remainder. The litigation which was brought in a state court was undertaken in good faith and was not frivolous, but was conducted by the bank for the bondholders' benefit. *Held*, that the bank, pending appeal to the state Court of Appeals from an adverse decision, was entitled to an allowance out of the bankrupt's estate for expenses and services of attorneys in such litigation.

4. SAME—ATTORNEY'S FEES—BANKRUPT'S TRUSTEE.
Litigation by a bankrupt's trustee brought to reduce the number of claimants to a special fund belonging primarily to mortgage creditors not being frivolous, the trustee was entitled to the allowance of reasonable attorney's fees.

5. APPEAL—SUBSEQUENT APPEAL—QUESTIONS REVIEWABLE.
Where, on a prior appeal, the question of the validity of certain bonds issued by the bankrupt corporation and of the claim made thereon was presented and determined, the bankrupt's trustee was not entitled to contest questions relating to interest on such bonds on a subsequent appeal.

Petition for Revision of Proceedings of the District Court of the United States for the Western District of New York.

This cause comes here upon petition to review an order of the District Court, Western District of New York, providing for the distribution of certain funds among the holders of the mortgage bonds of the bankrupt corporation. The facts sufficiently appear in the opinion. The opinions of the District Judge and of the referee are reported in 147 Fed. 814.

Frederick L. Manning, for Zartman, trustee.
Geo. E. Zartman, for petitioner.
Hammond & Hammond, for respondent.

Before LACOMBE, TOWNSEND, and COXE, Circuit Judges.

Digitized by Google

LACOMBE, Circuit Judge. The corporation was adjudicated a bankrupt July 2, 1902. In 1894, the company executed a corporate mortgage or trust deed to the First National Bank of Waterloo to secure an issue of 80 bonds ($500 each). In the year 1899, another mortgage was executed to the same trustee to secure the same bonds. The later mortgage covered real estate and fixtures which the company had acquired after the making of the first mortgage, and it also assumed to cover all the personal property of every kind, except choses in action, which the company then owned or might thereafter acquire. It is conceded that two-fifths of the property is subject to the lien of the mortgages. As to three-fifths of the property, which was after acquired, the lien of the mortgages is disputed.

A few days before the filing of the petition in bankruptcy, the bank, as trustee under the mortgages, on default in payment of interest, took possession of all of said property both real and personal, and continued to operate it until the property was sold by the trustee in bankruptcy under an order of the bankruptcy court that it be sold as free and clear of incumbrances, and that the liens of the mortgages should follow the funds realized from such sale. No one seems to question the propriety of this order. It provided, among other things:

"That immediately after said sale the said two-fifths of the entire proceeds thereof shall be distributed by this court in pro rata payments to the holders of the bonds of the said bankrupt which are secured by said mortgages and which shall be established before this court as valid obligations of said bankrupt."

The order then provided for the retention, pending the controversy as to title thereto, of the other three-fifths of the proceeds by the bank, upon interest at 3 per cent. per annum, which was the same rate which it was then paying upon moneys deposited with it upon certificates of deposit.

As to the three-fifths, the trustee in bankruptcy brought suit in the state court against the bank, trustee under the mortgages. He succeeded at the trial and at the Appellate Division, and the case is now pending on appeal to the Court of Appeals. At the sale, November 25, 1902, the bank bought in the property for $25,800. It held it, carrying on the business and looking for a purchaser until, about June 1, 1903, it sold the entire property to the Vough Piano Company for the same price, $25,800. The piano company was composed, in part at least, of persons interested in the bank. It paid the purchase price to the bank January 20, 1906, but without interest. The questions here presented deal only with questions arising upon distribution of the two-fifths.

After the sale, opportunity was given to the bondholders to establish their bonds before the referee in bankruptcy. Two bonds presented by one Francis Bacon were presented and allowed, but upon petition for review this court disallowed them. See 134 Fed. 341, 67 C. C. A. 255. Twenty-one bonds were presented by the Waterloo Bank. They were allowed by the referee and the District Court, and upon petition for review this court affirmed such allowance. See 134 Fed. 345, 67 C. C. A. 327.

Digitized by Google

1. It was contended by the trustee in bankruptcy that the referee should not allow the 21 bonds held by the bank unless the bank should deliver to him $10,500 of the notes which the bank produced, made or indorsed by the Waterloo Organ Company. The referee and the district court declined to require the surrender of such notes, upon which the bank is making claim as a general creditor of the bankrupt's estate. This question has already been disposed of here. We found that there was a valid consideration for the issue of these 21 bonds, which were turned over to the bank as collateral security for past and future indebtedness, only in the circumstance that "upon the delivery of the bonds the bank immediately increased its line of discounts to the company, and the indebtedness of the company to the bank was largely increased, and so continued down to the time of the adjudication, when the amount of paper on which the company was directly liable was about $11,000, or a sum in excess of the par value of the bonds." The $10,500 represented by these company notes cannot be used both as a valid consideration passing from the bank to the company to uphold the issue of the bonds, and also as a debt owing from the company to the bank to be paid back irrespective of what may happen to the bonds. The bank must elect whether it will make the bonds valid by allowing the consideration it gave for them (these notes) to be covered into the bankrupt estate, or will press its claim as a general creditor on the notes, leaving the bonds unsupported by the payment of any consideration for the same, and therefore invalid.

2. The trustee contends that the bank should be charged with interest at the rate of 6 per cent. upon the purchase price of the property from the date of its sale in June, 1903, till the actual payment of the purchase money in January, 1906. The referee charged it with interest for two years only at 3 per cent. We concur with the district judge in finding that the bank should pay 3 per cent. on the entire fund; the two-fifths as well as the three-fifths, but think that it should be charged that rate for the full period, two years and seven months. It is unnecessary to add anything to the opinions of the referee and district judge reported in 147 Fed. 814.

3, 4. We concur with the District Court in its conclusion affirming the referee's allowance to the bank for services as trustee for the bondholders under the mortgage and reversing the referee as to separate allowance for payment of coupons. As to the allowance for expenses and services of attorneys of the bank, as trustee, in the litigations, the value of the services is not disputed, and it is admitted that $270.65 for services in the bankruptcy court was properly allowed. It is contended that no allowance for services in the litigations in the state court should now be made, but that such question should be reserved until after decision by the state Court of Appeals, and the whole services be charged against the three-fifths in the event of success. A decision in the state court, however, if adverse to the mortgagee, would leave the trustee for bondholders personally responsible for these expenses of a litigation instituted and maintained for the benefit of all the bondholders. We are not prepared to hold that such litigation was frivolous or not undertaken in good faith, and see no reason why the allowance should not now be made.

Digitized by Google

5. The trustee in bankruptcy presents a bill for services and attorney's fees in the controversy (which was heretofore brought up to this court) as to the validity of the two bonds held by Bacon and the 21 bonds held by the bank. That litigation was not a frivolous one, as our former opinions indicated, and, since its object was to reduce the number of claimants upon the special fund belonging primarily to the secured (mortgage) creditors, that fund is the proper one to bear the expense. The charge seems to be excessive. The referee, who disallowed it altogether, did not pass upon the amount. Such amount may be determined in the District Court.

6. In proving claim upon the 21 bonds held by the bank and referred to as the collateral bonds, the interest represented by coupons maturing before bankruptcy was included. The coupons on all the other bonds, to and including December 1, 1901, were removed and paid as they fell due. It is unnecessary to discuss the argument now presented by the trustee in bankruptcy against this allowance. All questions as to interest on the bonds should have been presented and argued when the subject of the validity of the bonds themselves and of the claim made upon them was before this court on the former appeal.

The decree of the District Court is modified as above indicated, and cause remanded, with directions to decree in conformity with this opinion, without costs of this court.

NOTE.—Judge TOWNSEND heard argument, participated in the consultation, and voted to dispose of the cause as above indicated, but did not see the opinion.

(154 Fed. 660.)

PANG SHO YIN v. UNITED STATES.

(Circuit Court of Appeals, Sixth Circuit. June 18, 1907.)

No. 1,668.

ALIENS—DEPORTATION OF CHINESE—EVIDENCE OF NATIVITY.

Evidence considered, and *held* sufficient to entitle a Chinese person arrested for being unlawfully within the United States to his discharge on the ground that he was a citizen of the United States by birth; there being direct testimony of apparently credible witnesses to such fact, and no evidence to the contrary, except a statement made by defendant to the inspectors who arrested him, which, although somewhat inconsistent with such claim, was not irreconcilable therewith.

Appeal from the District Court of the United States for the Eastern District of Michigan.

B. F. Graziani, for appellant.

J. V. D. Wilcox, for appellee.

Before LURTON, SEVERENS, and RICHARDS, Circuit Judges.

SEVERENS, Circuit Judge. This is an appeal from an order of the District Court adjudging the appellant to be a Chinese person unlawfully within the United States and ordering his deportation to China. He was seized by two customs inspectors on the night of June 30, July 1, 1906, at the village of Ecorse, nine miles south of

Digitized by Google

Detroit and taken to the jail at Detroit. On July 2d he was brought before one of these officers and was sworn and examined by the latter through the medium of a Chinese interpreter employed by the government, and the other inspector, acting as stenographer, took down the statement. On July 5th a warrant was issued by a United States commissioner on the complaint of one of the inspectors, and the respondent was taken before the commissioner, where he pleaded not guilty. His defense was that he was born in San Francisco, Cal., and was therefore a citizen of the United States. The hearing was adjourned from time to time until November 19th, when the commissioner adjudged that the respondent was a Chinese person, and was guilty of being unlawfully within the United States, and entered an order for his deportation. The respondent appealed to the District Court, where the commissioner's order was affirmed.

The decisive question in the case is whether the appellant was born in this country of parents having a domicile here. If he was, his expulsion would deprive him of a constitutional right of citizenship.

The order of the commissioner, so far as it involved the question of the respondent's citizenship, was based entirely on the inspector's examination of the respondent above mentioned and the answers of the respondent to the questions put to him on said examination; and the testimony of the inspectors that at the time they seized the respondent at Ecorse he was coming from the direction of the Detroit river, in company with three other persons, one of whom was a Chinese person, and the other two white men. The interpreter, who was himself a Chinese person, testified that the respondent seemed to understand the Chinese language, and that from his general appearance, his complexion, and the manner of wearing his queue, he judged him to belong to that nationality. And it may be here said that the proof was sufficient to support the finding that the respondent was a Chinese person. Counsel for the appellant comment upon the use made by the government of the inspector's examination of the respondent below; that it was made when he had no counsel, and without warning to the respondent of the use which might be made of it, and by persons whose sole object was to convict him. There is at the head of the examination a statement that the respondent was given warning, but no witness swears to it, and there is no certificate to that effect. This is simply the unsworn ex parte statement of the stenographer. While the question is not raised in such a way as to require a ruling upon it, we feel bound to say that the unsatisfactory character of testimony so procured as the basis of an adjudication against the respondent is a factor which we take into account in reaching our conclusion.

In the inspector's examination, the respondent stated that he was 34 years old; that he was born in San Francisco; that his father's name was San Foy, and his father died when the respondent was quite young; that he went to China when he was four years old; that he had lived there until his recent return to this country; that his occupation there was farming; that when he returned he landed in Vancouver, British Columbia, and paid a head tax there of $500; that he had been in various parts of Canada; that he left Windsor at 10 o'clock the evening before his arrest by the inspectors and came across the Detroit river

Digitized by Google

in company with the other three persons mentioned by the inspectors; and that he was then on his way to Paducah, Ky., where he had a relative. This account might fairly excite suspicion, but it was not irreconcilable with the supposition that on his return to America he had no clear ground for expecting that he could prove his birth in the United States and establish his identity and right to entrance here, and that he did not intend to rely upon the fact of his birth in the United States. But several persons have been found and produced as witnesses whose veracity is vouched for by their neighbors, who swear to the circumstances of his nativity in San Francisco and his going to China when quite young, all as stated by him. One of these states the name of the street in San Francisco where the father lived and the respondent was born, and the month and year of the event, and he then knew the father and son; that he (the witness) afterwards saw the respondent in China when the latter was 10 years old, and now recognizes him as the same person. The identification of the appellant by the witness as the child of their acquaintance in San Francisco is so positive that we cannot feel justified in disregarding it when the consequences are so serious as the possible (and we think probable) expulsion from his native country of one who is entitled to share the birthright of citizenship.

We think the judgment and order of the District Court should be reversed, and the appellant discharged.

(154 Fed. 662.)

PITTSBURGH LAUNDRY SUPPLY CO. et al. v. IMPERIAL LAUNDRY CO.

Circuit Court of Appeals, Third Circuit. June 12, 1907.)

No. 351.

1. BANKRUPTCY—ACTS OF BANKRUPTCY—PREFERENCE BY JUDICIAL PROCEEDINGS—VACATION—TIME.

   Bankr. Act July 1, 1898, c. 541, § 3a, subd. 3, 30 Stat. 546 [U. S. Comp. St. 1901, p. 3422], makes it an act of bankruptcy for a person while insolvent to have suffered or permitted any creditor to obtain a preference by legal proceedings, and not to have vacated or discharged the same at least five days before a sale or final disposition of any property affected thereby; and section 31 declares that, whenever time is enumerated by days in the act, the number of days shall be computed by excluding the first and including the last. *Held* that, where property of a bankrupt was advertised for sale under an execution on August 22, 1906, the bankrupt had the entire day of the 17th in which to vacate or discharge the execution, before it would be guilty of an act of bankruptcy.

2. SAME.

   An allegation that defendant corporation committed an act of bankruptcy by permitting and confessing judgment to K., for the use of G., which judgment was entered, etc., and on which execution attachment was issued and a fl. fa. issued, and the goods of the defendant levied on by the sheriff, was insufficient.

3. SAME—APPEAL—REVIEW—DISCRETION—AMENDMENTS.

   The refusal of a court of bankruptcy to permit the amendment of an involuntary bankruptcy petition, for the purpose of inserting additional alleged acts of bankruptcy, would not be interfered with on appeal, unless abuse of discretion was shown.

Digitized by Google

Appeal from the District Court of the United States for the Western District of Pennsylvania.

A. Y. Smith, for appellant.

Mr. Moore, for appellee.

Argued before DALLAS and GRAY, Circuit Judges, and HOLLAND, District Judge.

GRAY, Circuit Judge. This is an appeal from the decree of the District Court for the western district of Pennsylvania, in bankruptcy, dismissing the petition of the appellants, as creditors of the Imperial Laundry Company, the appellee, to have the said company adjudicated a bankrupt.

On August 17, 1906, at eleven o'clock a. m., the said creditors' petition, in duplicate, was filed, stating claims amounting in the aggregate to $512.45, and alleging that the Imperial Laundry Company, a corporation of the state of Pennsylvania, having its principal place of business in the district aforesaid and engaged principally in mercantile pursuits, owed debts to the amount of one thousand dollars, was insolvent, and that within four months next preceding the date of the petition, committed an act of bankruptcy, in that it did theretofore, to wit, on the 15th day of August, A. D. 1906, while insolvent, suffer and permit certain creditors to obtain a preference through legal proceedings, and in not having, at least five days before a sale or final disposition of its property, affected by said preference, vacated or discharged the same; the specification being that, on said August 15, 1906, a certain creditor of said Imperial Laundry Company, viz., Arbuthnot Stephenson & Co., obtained judgment against said company for the sum of $114; and that on the 16th day of August, 1906, execution was issued by said creditor on said judgment, and levy was made by the constable on the goods and machinery and the property of the said bankrupt, and that the same was advertised for sale on the 22d day of August, 1906, at ——— o'clock, and it was alleged that the said bankrupt has not vacated or discharged said sale, or the preference that would be obtained thereby, at least five days before said sale.

It is further alleged:

"That the said laundry company also committed an act of bankruptcy, by permitting and confessing judgment to H. W. Kiskadden, for use of Isaac Guckenheimer, which said judgment is entered of record in the common pleas court No. 1 of Allegheny county, at D. S. B. No. 205 September term, 1906, on which said judgment execution attachment was issued at No. 549 September term, 1906, and fi. fa. issued at No. 111 September term, 1906, and the goods and property of the defendant was levied upon by the sheriff of said Allegheny county."

The petitioners then pray in the usual form for a subpœna, and that the said Imperial Laundry Company may be adjudged a bankrupt.

August 21, 1906, an answer was filed by the appellee, denying insolvency and also the commission of the act of bankruptcy first alleged, in that the date of filing the petition, to wit, the 17th day of August, 1906, was within five days of the time advertised for the sale

Digitized by Google

of said property. The answer also makes general denial as to the second act of bankruptcy alleged.

September 10, 1906, a petition was preferred by the appellants, to amend the creditors' petition by inserting three additional alleged acts of bankruptcy. This petition was refused. No reasons for the refusal are stated by the court, but they are readily apparent from an inspection of the amendments proposed, as they all lack the specific particularity requisite to the statement of an act of bankruptcy, or to sufficiently distinguish them from acts not in violation of the bankrupt law.

The assignments of error to the decree of the court, dismissing the petition, are, first, as to the holding that the company had all of the five days preceding the 22d, to vacate or discharge the alleged preference stated as the first act of bankruptcy in the petition. The act of 1898 declares in section 3a:

"Acts of bankruptcy by a person shall consist of his having * * * (3) suffered or permitted, while insolvent, any creditor to obtain a preference through legal proceedings, and not having, at least five days before a sale or final disposition of any property affected by such preference, vacated or discharged such preference." Act July 1, 1898, c. 541, 30 Stat. 546 [U. S. Comp. St. 1901, p. 3422].

The learned judge of the court below was of the opinion that the sale being set for August 22d, the alleged bankrupt had all of the five days preceding the 22d to vacate or discharge the alleged preference, and this would give all of the 17th to do so. "Having all that day to vacate or discharge the execution, it follows it was guilty in that regard of no act of bankruptcy before the end of that day." In this opinion, we think the learned judge was clearly right. Section 31 of the bankrupt act provides for the computation of time as follows:

"Whenever time is enumerated by days in this act, or in any proceeding in bankruptcy, the number of days shall be computed by excluding the first and including the last."

The 17th of August, the day on which the petition was filed, being excluded, there were five full days to and including August 22d, the day set for the sale. The petition was therefore prematurely filed in respect to this alleged preference. That the facts alleged in reference to the judgment for the use of Guckenheimer do not constitute an act of bankruptcy, is apparent on the face of the petition, and it is due to counsel for appellants to say that they were not urged as such at the hearing of this appeal.

The other assignments of error refer to the refusal of the court below to allow the amendments to the petition above referred to. The whole matter of permitting or refusing amendments, is entirely within the judicial discretion of the court, and, in accordance with the general rule, will not be interfered with by a reviewing court, unless abuse of such discretion has been shown. As the record discloses no ground for such interference in this case, the decree of the court below is affirmed.

Digitized by Google

(154 Fed. 797.)

MIDLAND CONTRACTING CO. v. TOLEDO FOUNDRY & MACHINE CO.

(Circuit Court of Appeals, Seventh Circuit. February 5, 1907. Rehearing Denied May 17, 1907.)

No. 1,292.

1. COURTS—FEDERAL COURTS—RESIDENCE OF PARTIES—OBJECTIONS—WAIVER.

The right of a defendant, sued in a federal court on the ground of diversity of citizenship, to object to the jurisdiction of the court because neither party is a resident of the district, is waived by his entering a general appearance and asking for an extension of time in which to plead and for a continuance, prior to the making of such objection.

[Ed. Note.—For cases in point, see Cent. Dig. vol. 13, Courts, § 815.]

2. REPLEVIN—DECLARATION—SUFFICIENCY ON DEFAULT.

Replevin is a possessory action, and where a wrongful taking is not alleged, but only a wrongful detention, the declaration must allege an immediate right of possession in the plaintiff, and an allegation of ownership merely will not sustain a judgment for plaintiff where defendant makes default.

[Ed. Note.—For cases in point, see Cent. Dig. vol. 42, Replevin, §§ 211–214.]

3. COURTS—PROCEDURE IN FEDERAL COURTS—ASSESSMENT OF DAMAGES ON DEFAULT.

Rev. St. § 649 [U. S. Comp. St. 1901, p. 525], which requires a stipulation in writing waiving a jury to authorize trial of issues of fact by the court alone, is not applicable to default cases, and in an action of replevin brought in a federal court within the state of Illinois, in which the defendant makes default, the court is authorized to assess the damages without a jury under the Illinois practice act (3 Starr & C. Ann. St. Ill. 1896, c. 110, par. 41).

[Ed. Note.—Conformity of practice in common-law actions to that of state court, see notes to O'Connell v. Reed, 5 C. C. A. 594, and Nederland Life Ins. Co. v. Hall, 27 C. C. A. 392.]

In Error to the Circuit Court of the United States for the Eastern District of Illinois.

This writ of error is prosecuted from a judgment recovered against the Midland Contracting Company, defendant below, upon alleged default, in a replevin suit, brought by defendant in error, to recover a steam dredge and damages for alleged unlawful detention. The suit was commenced in the Circuit Court for the Eastern District of Illinois, by summons and writ of replevin, with service returned as made upon the superintendent of the defendant corporation (plaintiff in error) at Vandalia, Ill., December 1, 1905. The declaration avers, in substance, that the plaintiff therein (defendant in error) is an Ohio corporation, citizen, and resident; that the defendant therein is a Colorado corporation, having its principal place of business at St. Louis, Mo.; and that the defendant on November 20, 1905, unjustly and unlawfully detained a steam dredge, the property of the plaintiff.

On December 2d the plaintiff in error delivered to the marshal an indemnifying bond for retention of the dredge. On March 13, 1906, a rule was entered upon it to plead to the declaration by March 15th. On March 15th an affidavit of the attorney on its behalf was filed in court, then in session, averring a good and meritorious defense, with reasons for an extension of time to prepare and plead, praying such extension and continuance to the May term. Both motions were denied by the court. On March 16th the record states appearance of both parties, and leave "given the defendant to plead to the plaintiff's declaration herein, instanter;" that "its plea to the jurisdiction" was thereupon filed; and that demurrer to such plea was entered. The plea states the incorporation of the parties in Ohio and Colorado, respectively, and that neither resides in the district of the venue.

Digitized by Google

On March 19th upon consent of parties, the demurrer to the plea was treated "as a motion to strike said plea from the files," and the court sustained such motion upon the ground that "the defendant had hitherto waived its rights under said plea to the jurisdiction of the court," through its several general appearances. No further motion appearing on behalf of the plaintiff in error, the judgment order was entered of which review is sought. It recites the failure of the defendant therein "to plead, answer, or demur"; that "having made default, and the court having heard the evidence submitted by the plaintiff, finds the issues for the plaintiff," and thereupon adjudges the dredge to be the property of the plaintiff below, and that the damages for the wrongful detention are $1,100. It awards recovery of possession and damages accordingly. Error is assigned for rejecting the plea in abatement and upholding jurisdiction of the parties, and for various alleged errors in practice.

D. E. Keefe, for appellant.

W. J. Wuerfel and Howard A. Swallow, for appellee.

Before GROSSCUP, BAKER, and SEAMAN, Circuit Judges.

SEAMAN, Circuit Judge (after stating the facts). The contention that the trial court erred in upholding jurisdiction, when it appeared that both parties to the suit were nonresidents of the district, is untenable, in view of the general appearance of the defendant below, in open court, on March 15th, with an affidavit of meritorious defense and of need for further time to prepare for trial, and an application thereupon for extension of time to plead and for continuance of the cause. This appearance was without qualification, and the plea in abatement was not filed until the following day, when leave was granted by the court to plead to the declaration. As the rule is well settled that the provision for suits to be brought in the district of the residence of one or the other party "does not touch the general jurisdiction of the court over such cause between such parties," but "is a matter of personal privilege, which the defendant may insist upon, or may waive, at his election" (Interior Construction Co. v. Gibney, 160 U. S. 217, 219, 220, 16 Sup. Ct. 272, 40 L. Ed. 401, and authorities cited), the appearance and applications referred to waived the objection subsequently interposed, and the plea was rightly overruled.

The plaintiff in error appears to have rested on the jurisdictional plea, making no application for leave to plead to the merits or for other relief from the default thereupon entered, and the only remaining questions open to consideration are, whether the record authorizes the judgment as entered. Error is assigned of two classes: (1) Want of timely service or sufficient declaration to authorize any default judgment in replevin; and (2) want of authority for assessment of damages by the court, without a jury.

1. The objections raised under the first-mentioned head are twofold: (1) That the defendant below was not in default under Practice Act Ill. c. 110, §§ 1, 8 (3 Starr & C. Ann. Ill. St. 1896, pp. 2977, 2989); (2) that the declaration is insufficient to support the judgment.

Assuming (without so deciding), for the one proposition, that the sections referred to were operative in the trial court, neither section impresses us as applicable to the case at bar. Section 1 provides that

Digitized by Google

the summons shall be returnable to the first day of the next term, except when sued out within 10 days of such term, and shall then be made returnable to the succeeding term. Section 8 provides, when service cannot be made 10 days before the return day, and summons is served later, that "the defendant shall be entitled to a continuance, and shall not be compelled to plead before the next succeeding term." The summons in suit was served December 1, 1905 and made returnable to the ensuing March term; so the fact of service appears within the terms and meaning of the statute. Any question of the regularity of such service is settled by the general appearance and not reviewable upon this inquiry.

The sufficiency of the declaration or record to support judgment in replevin is challenged, and we are of opinion that at least one ground is well assigned, namely, that there is no allegation of the right of the plaintiff therein to possession of the property. The declaration avers, not wrongful taking of the goods, but their wrongful detention by the defendant, for which replevin is authorized by statute in Illinois. Section 1, c. 119, Rev. St. 1874; 3 Starr & C. Ann. St. p. 3373. While ownership by the plaintiff is alleged, there is no allegation of right of possession; and the action being possessory, not essentially determinative of title, the sole issue to be tried is the right of possession at the commencement of the action. Cobbey's Law of Replevin, § 12; Reynolds v. McCormick, 62 Ill. 412, 415; Pease v. Ditto, 189 Ill. 456, 468, 59 N. E. 983. Ownership in one person does not exclude right of immediate possession in another, and the mere allegation of title does not tender the issue of right of possession, where unlawful taking is not averred. Wheeler v. Train, 3 Pick. (Mass.) 255, 257; Gazelle v. Doty, 73 Ill. App. 406, 408. Under the well-settled rules that the declaration must allege facts which give a right of recovery—with no presumptions arising in favor of the pleader—and that "a default admits only the facts well pleaded" therein (Schueler v. Mueller, 193 Ill. 402, 404, 61 N. E. 1044), the alleged fact of ownership does not, as we believe, authorize the judgment in replevin.

With the premise conceded, in effect, that the possession of the defendant was originally lawful, the plaintiff can recover upon the strength alone of his immediate right thereto, and not upon defect in the adversaries' claim. So neither the allegation of title nor that of unlawful detention presents the issue of immediate right of possession in the plaintiff, and default thereunder confesses no such fact.

2. The further contention of error in the assessment of damages by the court, without a jury, is not deemed tenable, as such procedure is authorized, upon default, by section 40 of the Illinois practice act (3 Starr & C. Ann. St. c. 110, par. 41, p. 3031). In Fidelity & Deposit Co. v. United States, 187 U. S. 315, 320, 23 Sup. Ct. 120, 47 L. Ed. 194, like provision is upheld as not infringing the constitutional right of trial of issues of fact by a jury. Section 649, Rev. St. U. S. [1 U. S. Comp. St. 1901, p. 525], which requires "a stipulation in writing waiving a jury," to authorize trial of issues of fact by the court alone, is not applicable to default cases; and, no inconsistent provision appearing,

Digitized by Google

conformity with the practice act of Illinois is authorized under section 914, Rev. St. U. S. [1 U. S. Comp. St. 1901, p. 684].

For the above-mentioned insufficiency of the declaration, we are of opinion that the judgment is unsupported; and it is reversed, accordingly, and the cause remanded for further proceedings in conformity with law.

(154 Fed. 788.)

CAMDEN v. JARRETT, Sheriff.

(Circuit Court of Appeals, Fourth Circuit. May 31, 1907.)

No. 705.

CONTRACTS—PERFORMANCE—CONDITIONS.

Defendant, having a claim against L., and desiring to obtain certain documentary evidence in possession of the husband of plaintiff's decedent, contracted to pay decedent or her assigns $4,325 on a specified date, in consideration of a delivery of the papers, and further obligated himself to pay decedent, in addition, $5,000 out of any money he might recover and collect from L. or F. under a specified contract, on condition that defendant recover judgment against L. for the amounts of money that might be recovered against defendant thereafter, for which defendant had claims against L. under his contract. Defendant thereafter compromised his suit against L., taking the note of a third person in full satisfaction of the claim. *Held*, that such compromise rendered performance of the condition by which decedent was entitled to the additional payment impossible, and she, not being responsible therefor, was entitled to recover the additional payment, as though the condition had been performed.

[Ed. Note.—For cases in point, see Cent. Dig. vol. 11, Contracts, § 1446.]

In Error to the Circuit Court of the United States for the Northern District of West Virginia, at Parkersburg.

H. P. Camden, for plaintiff in error.

George E. Price and Richard S. Ker (W. N. Miller and Braxton, Ker & McCoy, on the briefs), for defendant in error.

Before GOFF and PRITCHARD, Circuit Judges, and MORRIS, District Judge.

PRITCHARD, Circuit Judge. This is an action at law instituted by defendant in error against plaintiff in error in the Circuit Court of the United States for the Northern District of West Virginia, at the trial of which judgment was had in favor of the plaintiff below for the sum of $3,167.20, from which judgment defendant below sued out a writ of error.

From an examination of the record, it appears that on the 23d day of November, 1893, the plaintiff in error in this action instituted suit in the Circuit Court of the United States for the Eastern District of Virginia, in assumpsit, against Robert A. Lancaster, demanding damages in the sum of $30,000, in which action plaintiff in error was seeking to recover the sum of $18,090.87, alleged to be due by reason of a certain contract in relation to the purchase of the stock of the Greenbrier White Sulphur Springs Company. Lancaster was supposed to be insolvent at that time. Plaintiff in error and George L. Peyton had both been stockholders and directors of the Greenbrier White Sulphur Springs Company. On December 1, 1893, George L. Peyton was in-

Digitized by Google

vited to meet the plaintiff in error in Washington City, to discuss other suits involving the affairs of plaintiff in error in connection with the White Sulphur Springs Company. During the conversation, it appears that Peyton told plaintiff in error about certain papers of value to him in connection with the Lancaster suit then pending, which papers he showed the plaintiff in error, and, being asked what he would take for them, replied that he would take $10,000 for the same. After considering the matter for some time, plaintiff in error accepted the proposition, and gave his obligation, which is the basis of this suit, and took possession of the papers; the terms of the agreement being that the plaintiff in error was to pay Mrs. Peyton, the wife of George L. Peyton, the sum of $10,000. The consideration moving the plaintiff in error to undertake such payment was valuable papers actually delivered to him contemporaneously with the making of the contract; that of the said consideration of $10,000, $5,000 thereof was to be paid in any event, but the remaining $5,000 was only to be paid upon condition that plaintiff in error should recover judgment against Robert A. Lancaster on the claims which he had against said Lancaster, and which were the basis of the suit then pending against him. Under this contract, plaintiff in error paid the $5,000 which was to be paid in any event, but declined to pay the remaining $5,000. On the 12th day of September, 1904, the plaintiff in error compromised the Lancaster suit for the sum of $7,500, to be paid out of the proceeds of a certain Broun note when collected.

Notwithstanding the fact that the defendant in error relies upon a written contract, which purports to have been executed for a valuable consideration, to wit, valuable papers delivered to Camden, nevertheless it was attempted to vary the contract by oral testimony. It is insisted by plaintiff in error, that instead of the contract being a single contract, it is really two contracts in one, relating to separate and distinct matters, and demanding separate and distinct performances. On the trial of the case in the court below, the learned judge admitted evidence over the objection of defendant in error, by which it was sought to prove a different consideration from that stated in the contract, and submitted certain instructions, tendered by the plaintiff and defendant, respectively. The defendant filed a bill of exceptions together with an assignment of errors, and the plaintiff likewise filed a bill of exceptions together with an assignment of errors. The case, therefore, comes before this court on writs of error sued out by the respective parties.

The original declaration contained three counts, and a demurrer was interposed by the defendant to the same, and the demurrer was sustained as to the first and second counts, and the action was remanded to rules, with leave to amend at bar or at rules, whereupon an amended declaration was filed. A demurrer to the declaration was also interposed by the defendant below, but the court overruled the same. We have carefully considered the contentions of the defendant below relating to the allegations contained in the declaration, and are of opinion that the same are without merit.

The real question involved in this controversy is whether the plaintiff below is entitled to recover upon the contract upon which this ac-

Digitized by Google

tion is based. It appears from the evidence, as well as the contract, that on the 1st day of December, 1893, the defendant in error delivered to the plaintiff in error certain valuable papers, for which the plaintiff in error undertook and agreed to pay the defendant in error on May 1, 1894, $4,325, and, "in addition to the above-named amount," to pay to the plaintiff the further sum of $5,000 upon the happening of the condition set forth in the contract. The contract is as follows:

"This is to show that I have this day, Dec. 1st, 1893, agreed to pay Mrs. Mary C. Peyton or her assigns four thousand three hundred and twenty-five ($4,325) dollars on May 1st, 1894. The consideration is for valuable papers delivered to me this day. And I further agree and obligate myself to pay her in addition to the above named amount five thousand ($5,000) dollars out of any money I may recover and collect from R. A. Lancaster or F. O. French, under my contract with the said R. A. Lancaster of May 31st, 1881. Upon the condition that I recover judgments against said Lancaster for the amounts of money that may be recovered against me hereafter, for which I may have claims against the said Lancaster under and by virtue of said contract."

It appears from the evidence that the plaintiff in error had brought suit against a man named Lancaster, and that the husband of Mrs. Mary C. Peyton had in his possession certain valuable documentary evidence which was material to the questions involved in the controversy between the plaintiff in error and Lancaster, and the plaintiff in error, being anxious to secure this evidence, entered into the foregoing contract, by which he agreed to pay on the 1st day of May, 1894, the sum of $4,325, and also agreed to pay the further sum of $5,000 upon condition that he recovered judgment against Lancaster; in other words, the plaintiff in error agreed to pay Mrs. Mary C. Peyton the sum of $5,000 in addition to the sum first mentioned in the contract, provided he succeeded in accomplishing what he had undertaken by the suit he had instituted against Lancaster. It appeared that for some reason, which is unexplained by the record, the plaintiff in error entered into a compromise by which he secured a note from a man by the name of Broun in full satisfaction and compromise of the claim which he held against Lancaster. The action of the plaintiff in error in compromising the suit which he had instituted against Robert A. Lancaster rendered impossible the happening of the condition upon which defendant in error, according to the terms of the contract, would have been entitled to recover the sum of $5,000. The defendant in error was in no wise responsible for this condition of affairs, and under these circumstances we are called upon to determine whether the plaintiff in error by his action in compromising the suit would be entitled to take advantage of a situation whereby his acts rendered the performance of the contract impossible. It is admitted that the plaintiff in error compromised his claims against Lancaster, which forever precluded the possibility of securing a judgment upon the same. It is a well-settled principle of law that where the obligor to a contract which contains a condition does that which renders the performance of the condition impossible he immediately becomes liable on his contract.

Digitized by Google

Addison on Contracts (3d Ed.) vol. 1, § 326, in discussing this question says:

"It is a principle of law that he who prevents a thing from being done shall not avail himself of the nonperformance which he has himself occasioned."

Chitty on Contracts (11th Ed.) vol. 2, p. 1029, states the rule:

"But where the performance of the contract is rendered impossible by the act of the party who is chargeable thereon, such impossibility affords no answer to an action on the contract."

Also, in the case of Cape Fear & Deep River Navigation Co. v. George Wilcox, 52 N. C. 481, 78 Am. Dec. 260, it is stated in the headnote that:

"One who prevents the performance of a condition, or makes it impossible by his own act, shall not take advantage of the nonperformance."

In view of the principle enunciated in these cases, we are of opinion that the plaintiff below, under the circumstances, was entitled to recover on the contract which forms the basis of this action, inasmuch as the defendant below by his conduct has rendered impossible the performance of the condition contained in the contract by compromising the suit which he had instituted against the said Lancaster.

We have carefully considered the other assignments of error by the defendant below and the rulings of the court in relation to the same, and are of opinion that such assignments of error are without merit.

This court declines to consider the writ of error sued out by the plaintiff below, for the reason that in the assignments of error there is a total failure to observe the rules of practice as announced by this court and frequently referred to in its opinions.

For the reasons hereinbefore stated, the judgment of the Circuit Court is affirmed.

(154 Fed. 791.)

HATCH v. CURTIN. In re TUCKER et al. Ex parte CURTIN.

(Circuit Court of Appeals, First Circuit. July 2, 1907.)

No. 677.

1. BANKRUPTCY—PROCEEDINGS—METHOD OF REVIEW.

This appeal relates to the title of certain assets claimed by the trustees in bankruptcy of Frederick M. Tucker & Co. to belong to the bankrupt estate, but which the appellant claims belongs to a testamentary trust. The proceedings were commenced by the trustees in bankruptcy by a petition in the District Court. There the appellant resisted the petition, among other reasons, because, as he claimed, the District Court had no jurisdiction over the controversy. The District Court decided against him, and he thereupon appealed to us. In this court the parties mutually agreed to waive all questions of jurisdiction. *Held*, that the waiver was sufficiently retroactive in its effect to enable us to take jurisdiction of the merits of the case on appeal.

2. SAME—TRUST FUND—ADMINISTRATION.

The partners of the bankrupt partnership of F. M. Tucker & Co. were formerly testamentary trustees of the same trust, which the appellant now represents as their successor. While such trustees, they borrowed from the trust, and earmarked certain stocks of their own as collateral

Digitized by Google

securing repayment. F. M. Tucker & Co. failed and had made an assignment under the state law for the benefit of their creditors, and thereafterwards they went through the form of canceling the indebtedness, and of taking the collateral securities as the absolute property of the trust. They still later disposed of a portion of the collateral, leaving a residue, which residue constitutes the assets in controversy here. The trustee in bankruptcy claims, first, that the transaction by which the loan was attempted to be discharged and the collateral securities taken as the absolute property of the testamentary trust was void; and, second, that as F. M. Tucker & Co. disposed of certain of the securities after the attempted cancellation of the indebtedness, and as the securities thus disposed of were more than equal to the indebtedness, the proceeds thereof should be held, as between the present parties, to have discharged the indebtedness. *Held* that, under the circumstances, the transaction which involved the attempted cancellation of the indebtedness was not only void, but that it was void for all purposes; and, further, *held*, that inasmuch, as between the members of the bankrupt copartnership and the testamentary trust, both the status of the indebtedness and of the collateral securities now in controversy remained in law unchanged until the time of the bankruptcy, and inasmuch, also, as the equities remain precisely the same as they would have been between F. M. Tucker & Co. and the testamentary trust if there had been no bankruptcy, the securities in controversy must be administered for the benefit of the testamentary trust.

Appeal from the District Court of the United States for the District of Massachusetts.

Harold Williams, Jr., for appellant.

Robert K. Dickerman, for appellee.

Before COLT and PUTNAM, Circuit Judges, and ALDRICH, District Judge.

PUTNAM, Circuit Judge. This is in the line of the events described in our opinion in Marion E. Tucker, petitioner, passed down on October 31, 1906, and reported 153 Fed. 91. In that opinion we pointed out that Luther P. Tucker, deceased, domiciled in the state of New York at the time of his decease, grandfather of Marion E. Tucker, by his will, duly probated and allowed in New York, gave to Frederick M. Tucker and Tracy H. Tucker as trustees a certain fund, to be invested by them as trustees, the income thereof to be paid over to said Marion E. Tucker during her natural life. The persons thus named as trustees were also made executors of the will, and were duly qualified as such executors by the proper Surrogate's Court of the state of New York. The persons thus named as trustees, Frederick M. Tucker and Tracy H. Tucker, were transacting a brokerage business by the name of Frederick M. Tucker & Co., and on an involuntary petition, filed in the District Court for the District of Massachusetts on July 6, 1903, were duly adjudged bankrupts, both as copartners and as individuals. We showed in Marion E. Tucker, petitioner, that the question was made whether Frederick M. Tucker and Tracy H. Tucker had ever been duly qualified as trustees under the will. Nevertheless, we also showed that they had received into their hands the legacy given by the will, and assumed to act as trustees therefor, and that the assets arising therefrom were at one time duly earmarked as trust assets. Consequently, we showed that, according to the general rules of equity, which allow no trust to fail merely for the want of trustees,

Digitized by Google

the legacy thus received constituted a true trust, and was to be administered in equity accordingly; so that, whether or not the persons named as trustees were duly qualified as such, so far as this litigation is concerned, was of no substantial importance.

The origin of this appeal is very well shown by the certificate of the referee to the learned judge of the District Court, as follows:

"The bankrupts, as trustees under the will of Luther P. Tucker for the benefit of Marion E. Tucker, had at the date of their bankruptcy a note of the firm of F. M. Tucker & Co. for $5,000, which they had taken for moneys of the trust estate loaned to the firm by themselves as trustees. This note was originally secured by certain stocks, the greater part of which were sold by them before the bankruptcy, and other stocks were substituted for them, some of which were sold after the bankruptcy to an amount which I found sufficient to pay the note. which I accordingly found had been paid. There thus remained in the hands of the bankrupts some of the original securities and some of those which had been substituted, and I ordered that these be delivered to the trustee in bankruptcy, all of which will more fully appear from the decree and findings, which, with the evidence taken at the hearings at which the title to these stocks was in issue, are herewith transmitted. This order was made upon a hearing on a petition by the trustee in bankruptcy, asking that an order be entered that the securities in the hands of the bankrupts be delivered to him; counsel for the present trustee under the will not waiving any right to object to the jurisdiction of the court in any respect."

The person described as the "present trustee" in the certificate is Hatch, the petitioner, now the appellant, who has been duly qualified as trustee in lieu of the trustees named in the will, who, since our determination of Marion E. Tucker, petitioner, already referred to, have withdrawn themselves from the trust. The record shows, as stated by the referee, that the stocks in question were claimed to have been, throughout all the proceedings, in the hands of Frederick M. Tucker and Tracy H. Tucker, assuming to hold them in the trust capacity which we have described, though since the proceedings in the District Court now appealed from they have been held for whom it might concern in the hands of a gentleman who was acting as their counsel.

The District Court confirmed the order of the referee, finding that the trust had no interest in the securities, and it directed them to be delivered to Curtin, the trustee in bankruptcy of the copartnership, and the appellee herein. It was claimed by Hatch, as trustee, in the District Court, that the securities still belong to the trust, and that they were not in the possession of the trustee in bankruptcy, and that, being held adversely, the District Court had no jurisdiction to make the order which was made in reference to that possession. He also, of course, claimed that the entire merits of the case were with him, as representing his trust. No proceeding in the nature of a petition for revision has been filed in this court, but, as appears in the title of the case, it has come to us on appeal in the strict sense of the term. If both of these positions had been insisted on before us, First National Bank v. Chicago Title and Trust Company, 198 U. S. 280, 25 Sup. Ct. 693, 49 L. Ed. 1051, would apply, and we could not take jurisdiction over the matter on an appeal; but the proposition that the District Court had no jurisdiction by a summary proceeding over

Digitized by Google

the assets involved is waived, and all the parties hereto have agreed that we should dispose of their rights on the merits. Consequently, the rule which was for the last time, and thoroughly, explained in Wolkowich v. Mason, by our opinion passed down on October 9, 1906, and reported in 80 C. C. A. 435, 150 Fed. 699, 701, and sequence, applies, and we can proceed to dispose fully of this branch of the litigation.

The first question, of course, is whether the $5,000, or any other sum was advanced from moneys appertaining to the trust named in the will of Luther P. Tucker, and was taken for the personal use of the bankrupt copartnership of F. M. Tucker & Co., and stocks set aside and otherwise earmarked as collateral. On this point we have no doubt. If funds which were earmarked as belonging to a trust were thus appropriated, it is unimportant, so far as this case is concerned, what was the form of the appropriation. The account books of Frederick M. Tucker and Tracy H. Tucker as trustees were not produced, and, indeed, the record suggests that they kept no proper accounts in reference to the trust. Frederick M. Tucker testified that, prior to April, 1903, there was a fund in the Massachusetts Loan & Trust Company earmarked as belonging to this trust, and which in fact did belong to it. This is not contradicted, although the record does not show the origin of this fund, and the testimony taken discloses no effort to show it. We are not permitted by the record to find otherwise than that the moneys were so deposited in trust. Also, we are not permitted by the record to find otherwise than that $5,000 of this fund was on April 18th transferred to the use of the bankrupt copartnership of F. M. Tucker & Co., and was in fact used for their benefit. Frederick M. Tucker testified positively to that fact, and also testified that a note was given therefor, dated April 18th and made payable to George H. Nolte, carrying collateral, and indorsed in blank by George H. Nolte, and that this note and the collateral were turned over to the trustees under the will, and deposited in a box in the State Street Safe Deposit Vaults at Boston. Tucker testified, also, that this transaction was entered on the journal of the copartnership, under the date named (April 18th), and that there was at the same time an entry in detail of the collateral given therefor. The trustee in bankruptcy could easily have contradicted this evidence if not true, but he did not do it. One Kimball, who was formerly a bookkeeper for the bankrupt copartnership, testified to cotemporary entries on its cashbook, showing a cash receipt of $5,000, and a remittance of the same to New York on the firm's account, and also a proper debit entry to "bills payable" of the note which we have described, as also carrying interest at 6 per cent. Notwithstanding some confusion in the testimony, which is not of an extraordinary character, these facts positively appear, and we are not justified in disregarding them; so that we find that $5,000 was withdrawn from the trust fund for the benefit of the bankrupt copartnership, and collateral deposited therefor, as maintained by the appellant.

Next comes the question whether any part of the loan has been paid. Apparently a few dollars have been paid on it in some way which the record does not disclose, and which, in view of the judgment which we will enter, it is not necessary for us to trouble our-

Digitized by Google

selves about. Excepting these few dollars, no payment has been made on the loan, unless by what is claimed by the trustee in bankruptcy or by the bankrupts to have operated as such, as we will describe.

The collateral was changed from time to time, the old collateral being taken out and new collateral substituted, as might be expected in connection with the business of F. M. Tucker & Co. as brokers; that being the usual method of dealing between brokers borrowing on collateral and the holders of the collateral, because brokers are all the time changing their assets in the usual course of business. We therefore attach no importance to these changes in the collateral; neither do we understand that anybody attempts to regard them as of any special account. Matters so continued until the 1st day of July, 1903, when Frederick M. Tucker told Kimball, the bookkeeper already named, to mark the note as paid, and that the collateral would be held and taken in payment for the note, and Kimball made an entry that day on the "bills payable" book as follows: "Paid on loan $4,677.50." This entry related to the $5,000 note which we have described. Meanwhile, between April 18th and July 1st, F. M. Tucker & Co. had failed, and had made a voluntary assignment for the benefit of their creditors, which stood unrevoked until the petition in bankruptcy was filed against them. The $5,000 note provided that the collateral might at any time be sold at public or private sale, and the proceeds applied to the payment of the debt; but this, of course, under ordinary circumstances, would not permit the creditor of his own motion to transfer the collateral to himself as his own absolute property by a mere stroke of the pen. In the present instance this might have been permissible except for special circumstances, because F. M. Tucker & Co. on the one side, and Frederick M. Tucker and Tracy H. Tucker as trustees on the other, might be said to have been the masters of the whole situation; but, the voluntary assignment having intervened, the rights and powers of F. M. Tucker & Co. were suspended, and, moreover, as they were then insolvent and on the verge of bankruptcy, this transaction must be regarded in fraud of the statute. Therefore, under the circumstances, we are compelled to regard it as void. The trustee in bankruptcy, however, occupies the singular position of holding that it was void so far as he was concerned, but that it had some effect prejudicial to the petitioner, appellant, or to the beneficiary whom he represents. On the other hand, the transaction must be regarded as void from the standpoint of either of them, and wholly ineffectual.

To a considerable extent the collateral for the $5,000 note has been sold. The record, however, shows that the proceeds of these sales went to the benefit of F. M. Tucker & Co., and none to the benefit of the trust under the will. The collateral now remaining is apparently the same as was on hand when the petition in bankruptcy was filed, so that, as none of it has been disposed of since the bankruptcy proceedings were commenced, and as there is no suggestion in the record of anything in the nature of a preference in violation of the statutes in bankruptcy, the present status is to be determined according to the condition of things at the time the involuntary petition was filed; in other words, the equities involved are those which exist as

Digitized by Google

between the petitioner, appellant, or Marion E. Tucker or the trust, on the one hand, and F. M. Tucker & Co. as individuals and copartners, on the other. It is the general rule in bankruptcy, as we have several times pointed out, that an estate in bankruptcy has no greater equities than the bankrupts themselves, unless there has been a preference or some other act which was a fraud on the statute. In re Chase, 124 Fed. 753, 755, 59 C. C. A. 629. Nothing of this character existing, and what was received from the collateral which was disposed of having gone to the benefit of F. M. Tucker & Co., and the transaction of July 1, 1903, being entirely void, no part of the proceeds is to be regarded as having been applied for the benefit of the trust; and the note, except so far as it has been apparently reduced by the minor amount, which is not explained, and the collateral now remaining, are the property of the trust and of the petitioner, representing the trust. Indeed, in this respect the condition, except as we have previously stated, is precisely the same as though there had been no proceedings in bankruptcy, and as though F. M. Tucker & Co. still owed the note.

It is impossible on this record, however, for this court to ascertain whether the collateral remaining is sufficient to liquidate the debt to the trust. Under the circumstances, it is the duty of the District Court in bankruptcy to proceed in the usual way. If there is reasonable ground to apprehend that on an accounting the collateral now remaining and in issue here, if disposed of under proper directions, would liquidate the balance due on the note, with interest, less the minor payments to which we have referred, if there have been any such payments, and probably leave a balance for the benefit of the estate in bankruptcy, the District Court in bankruptcy should dispose of the collateral, direct payment of the debt to the appellant, petitioner, for the benefit of his trust, as asked by him, and permit the trustee in bankruptcy to retain the surplus. If, however, there is no reasonable ground to apprehend that the estate in bankruptcy can derive any advantage from such a course of proceedings, the District Court in bankruptcy should direct the delivery of the collateral to the petitioner, appellant, as representing his trust, and permit proof of the debt to the trust as a secured claim, or cause liquidation in some other way which the law permits, or to which the parties, with the approval of the court, agree.

The decree of the District Court is reversed, and the case is remanded to that court for further proceedings in accordance with our opinion passed down this day, and the appellant recovers his costs of appeal against the appellee as trustee.

Digitized by Google

(154 Fed. 929.)

PITTSBURGH CONST. CO. v. WEST SIDE BELT R. CO. et al.

(Circuit Court of Appeals, Third Circuit. July 18, 1907.)

No. 34.

1. CORPORATIONS—CONTRACT BY FOREIGN CORPORATION IN VIOLATION OF STATUTE—LEGALITY.

Under the Pennsylvania act of April 22, 1874 (P. L. 108), which provides that it shall be unlawful for a foreign corporation to do any business in the state until it shall have registered and complied with certain other requirements to bring it within the jurisdiction of the courts in the state, and also makes it a criminal offense for any officer or agent to transact any business within the state for a foreign corporation which has not complied with its requirements, a contract entered into in Pennsylvania by a foreign corporation which had not at the time complied with the statute to construct a railroad within the state is illegal and void, and no action can be maintained thereon, either against the other party or a guarantor to recover the contract price of work done thereunder, although the corporation complied with the statute prior to the doing of the work.

[Ed. Note.—For cases in point, see Cent. Dig. vol. 12, Corporations, § 2544.

Foreign corporations doing business in state, see notes to Wagner v. J. & G. Meakin, 33 C. C. A. 585; Ammons v. Brunswick-Balke Collender Co., 72 C. C. A. 622.]

2. CONTRACTS—ACTION GROUNDED ON ILLEGAL CONTRACT—TEST.

Whether an action is grounded upon an illegal contract depends upon whether proof of such contract is necessary to establish the cause of action alleged. If so, the court will not enforce it nor any alleged rights arising out of it.

In Error to the Circuit Court of the United States for the Western District of Pennsylvania.

Robert J. Dodds and Edwin W. Smith, for plaintiff in error.

Eugene Mackey, James W. Lee, and Johns McCleave, for defendants in error.

Before DALLAS and GRAY, Circuit Judges, and HOLLAND, District Judge.

HOLLAND, District Judge. The Pittsburgh Construction Company, the plaintiff in error, brought this action against the West Side Belt Railroad Company and John S. Scully and Theodore N. Barnsdall, the defendants in error, to recover the sum of $332,750.98, upon an award of James H. McRoberts, chief engineer of the West Side Belt Railroad Company, sitting as arbiter. The West Side Belt Railroad Company (hereinafter called the "Belt Road") was a corporation organized under the laws of the state of Pennsylvania for the construction and operation of a road from Pittsburgh to Bruce Station on the Baltimore & Ohio Railroad, a distance of about 12 miles. John S. Scully was the president and Theodore N. Barnsdall was one of the directors. On April 17, 1901, A. S. Petrie, the secretary, resigned his office to enable him to contract with the company to build the 12 miles of railroad for which it was organized, and on the 25th day of April, 1901, executed a contract with the Belt Road for that purpose,

Digitized by Google

and about the same time obtained permission to sublet the work to the Pittsburgh Construction Company, a corporation organized under the laws of the state of West Virginia, for which letters patent were issued to it on April 14, 1901. The contract between Petrie and the construction company was dated May 24, 1901, and was identical in terms with his agreement with the Belt Road. The consideration was to be $388,695.44, subject to such alterations and additions as were provided for under the terms of the contract, of which and the cost of which James H. McRoberts was made the final arbiter. For the payment of all moneys to become due under this contract the defendants in error became surety by writing duly executed, of which the following is a copy:

"For value received, the West Side Belt Railroad Company and John S. Scully and W. T. Barnsdall do hereby guarantee and become surety for the payment of the money mentioned in the within contract as the same becomes due and payable.

"In witness whereof, the said West Side Belt Railroad Company has hereunto set its common corporate seal, by the hand of its president, attested by its secretary, and the said John S. Scully and T. N. Barnsdall have hereunto set their hands and seals this 24th day of May, A. D. 1901."

The case was tried before a jury and a verdict in favor of the plaintiff for the amount of the award. Motion and reasons for a new trial were filed by the defendants, as well as a motion for judgment non obstante veredicto. The trial judge in a carefully considered opinion (Pittsburgh Construction Co. v. West Side Belt R. Co. et al. [C. C.] 151 Fed. 125) entered judgment for the defendants notwithstanding the verdict, because the plaintiff, being a foreign corporation, had failed to register in Pennsylvania prior to the execution of the contract upon which the award was made in accordance with the provisions of the act of Assembly approved April 22, 1874. P. L. 108. To this action of the Circuit Court a writ of error was sued out and the assignments of error in this court were as follows:

"First. The learned court erred in entering judgment in favor of the defendants non obstante veredicto upon the motion of the defendants, which is as follows: 'And now, June 12, 1906, the defendants move the court to have all the evidence taken upon the trial duly certified and filed so as to become part of the record, and for judgment non obstante veredicto upon the whole record.'

"Second. The learned court erred in not entering judgment in favor of the plaintiff upon the verdict."

There were eight matters of defense set up by the defendants at the trial of the case in the Circuit Court, none of which was considered by the learned judge on the motion for judgment non obstante veredicto, excepting the first, to wit:

"The contract is void because it was executed before the Pittsburgh Construction Company, a foreign corporation, was registered in Pennsylvania."

As we are of the opinion that the judgment was properly entered in the Circuit Court, it will be unnecessary to consider any of the other matters of defense here. The contract under which the road was built and the work done was executed on May 24, 1901, and the construction company registered at Harrisburg, Pa., with its office in

Digitized by Google

Pittsburg, Pa., on the 15th day of June, 1901. The act of General Assembly of Pennsylvania, the provisions of which it is claimed were violated by the construction company in this case, is the act of April 22, 1874 (P. L. 108), passed to carry into effect article 16, § 5, of the Constitution of Pennsylvania, which provides that:

"No foreign corporation shall do any business in this state without having one or more known places of business, and an authorized agent or agents in the same upon whom process may be served."

The first paragraph of this act of 1874 declares that:

"From and after the passage of this act no foreign corporation shall do any business in this commonwealth until said corporation shall have established an office or offices and appointed an agent or agents for the transaction of its business therein."

This paragraph prevents a foreign corporation doing business in this state before it establishes and appoints an agent therein; but the second paragraph in the act goes further, and enacts:

"It shall not be lawful for any such corporation to do any business in this commonwealth until it shall have filed in the office of the Secretary of the Commonwealth a statement under the seal of said corporation, and signed by the president or secretary thereof, showing the title and object of said corporation, the location of its office or offices, and the name or names of its authorized agent or agents therein; and the certificate of the Secretary of the Commonwealth under the seal of the commonwealth, of the filing of such statement, shall be preserved for public inspection by each of said agents in each and every of such offices."

The second paragraph declares unlawful the doing of any business by a foreign corporation not complying with the terms of the act. The third paragraph makes the transaction of such business a positive crime, punishable with fine and imprisonment:

"Any person or persons, agent, officer or employé of any such foreign corporation, who shall transact any business within this commonwealth for any such foreign corporation, without the provisions of this act being complied with, shall be guilty of a misdemeanor, and, upon conviction thereof, shall be punished by imprisonment not exceeding thirty days, and by fine not exceeding one thousand dollars, or either, at the discretion of the court trying the same."

It is clearly shown by documentary evidence that the construction company entered into the contract upon which it declares, and through which it desires to recover before registering in this state, in accordance with the act of 1874. Had this act expressly declared void contracts made by a foreign corporation not complying with the usual requirements, there would be no room for any contention by the plaintiff that it could recover in this case, as the Supreme Court has held in the case of Diamond Glue Co. v. United States Glue Company, 187 U. S. 611, 23 Sup. Ct. 206, 47 L. Ed. 328, that, where the state act declares void all contracts made by foreign corporations not observing the required formality, a recovery cannot be had upon the contract. The Pennsylvania act in question does not in terms declare the contract void. It does, however, declare in the first paragraph that "no foreign corporation shall do business in this commonwealth until such corporation shall have established an office," etc.; and in the second

Digitized by Google

paragraph that "it shall not be lawful for any such corporation to do any business in the commonwealth until it shall have filed in the office of the Secretary of the Commonwealth a statement * * * showing the title and object, * * * the location of its business, and the name, or names, of its authorized agent," etc.; and the third paragraph makes any violation of these provisions a misdemeanor punishable by fine and imprisonment. Do these provisions of this act of 1874 then render void all contracts made by foreign corporations without having first registered as required? The weight of authority is to the effect that it is not absolutely necessary in order to make such contracts void that the Legislature should, in express terms, declare them so. The rule in this regard has been clearly and aptly expressed by Lord Chief Justice Holt in Bartlett v. Vinor, Carthew 253, as follows:

"Every contract made for or about any matter or thing which is prohibited and made unlawful by any statute is a void contract, though the statute itself does not mention that it shall be so, but only inflicts a penalty on the offender, because a penalty implies a prohibition, though there are no prohibitory words in the statute."

The rule thus stated has been generally followed by the courts, and especially by the Supreme Court of Pennsylvania in a number of cases. Mitchell v. Smith, 1 Bin. (Pa.) 110, 2 Am. Dec. 417; Badgley v. Beale, 3 Watts (Pa.) 263; Columbia Bank & Bridge Co. v. Haldeman, 7 Watts & S. 233, 42 Am. Dec. 229; Johnson v Hulings, 103 Pa. 501, 49 Am. Rep. 131; Thorne v. Travelers' Insurance Co., 80 Pa. 29, 21 Am. Rep. 89. In Johnson v. Hulings, supra, the plaintiff was in the identical situation with the construction company in the case at bar. In both the contract would have been entirely lawful and legitimate but for the failure on the part of the complainant to comply with the statutory requirements. In Johnson v. Hulings, supra, the complainant engaged to sell, or did sell, land upon which he was entitled to commissions of $10,000 had he previously complied with the Pennsylvania act of April 14, 1849, requiring him to take out a broker's license. His failure to do so was held to be a bar to a recovery for the commissions, because the act with which he failed to comply prescribed a penalty, and in this case the construction company is guilty of the same default in not having complied with the act requiring registration before entering into the contract upon which the award is made. This act is a salutary one, for the protection of persons transacting business with foreign corporations. The facility with which irresponsible corporations are created, frequently with no assets within the jurisdiction where business is transacted, would frequently leave creditors without any chance whatever of collecting their claims were it not for acts requiring registration where business is transacted. This enables the creditors to bring the foreign corporation within the jurisdiction of the courts where the obligations are created; and, in order that the provisions of these laws may be complied with, it is necessary that they should receive a reasonably strict enforcement. Conscious of the importance of requiring foreign corporations to comply with these requirements of the act, the courts have uniformly insisted upon registration before beginning business in a foreign jurisdiction. The act of 1874 has been passed upon by the Supreme Court of

Digitized by Google

Pennsylvania, and the federal courts will follow such constructions. McCanna & Co. v. Citizens' Co., 76 Fed. 420, 24 C. C. A. 11, 35 L. R. A. 236. The point in this case was not squarely decided by the Supreme Court of Pennsylvania until 1902, about one year after the execution of the contract, but prior thereto cases involving a similar principle had been passed upon in Johnson v. Hulings, 103 Pa. 501, 49 Am. Rep. 131; Thorne v. Travelers' Insurance Co., 80 Pa. 29, 21 Am. Rep. 89; Lasher v. Stimson, 145 Pa. 30, 23 Atl. 552. In the case of Delaware, etc., Co. v. Passenger Railway Co., 204 Pa. 25, 53 Atl. 533, the Supreme Court, following the rule indicated in Lasher v. Stimson, supra, said:

"The purpose of the act is to bring foreign corporations doing business in this state within the reach of legal process. This purpose is not accomplished by a registration of the corporation at the pleasure of its officers, or when it may be to their interest to appeal to our courts. The act is for the protection of those with whom it does business, or to whom it may incur liability by its wrongful acts, and nothing short of a registration before the contract that it seeks to enforce is made can give it a right of action. Any other construction of the act would violate its plain words, and wholly defeat its object by affording protection to the corporation and denying it to the public."

The suit here is against the sureties of the contractor, and the illegal contract the basis of the action. As the plaintiff must rely upon its void contract to recover, the action must fail. The test as to whether the action is grounded upon the void contract depends upon whether it requires the aid of an illegal transaction to establish the case, and, if it be necessary to prove the illegal contract in order to maintain the action, the courts will not enforce it, nor will they enforce any alleged rights springing from such agreements. Johnson v. Hulings, supra; McMullen v. Hoffman, 174 U. S. 639, 19 Sup. Ct. 839, 43 L. Ed. 1117.

For the reasons stated, the judgment non obstante veredicto entered by the Circuit Court is affirmed.

(154 Fed. 933.)

WINEMAN v. DRAKE et al.

(Circuit Court of Appeals, Seventh Circuit. April 16, 1907. Rehearing Denied May 17, 1907.)

No. 1,301.

1. COLLISION—STEAM VESSELS MEETING—MUTUAL FAULT.

The steamer City of Berlin, with a barge in tow on a line, both ore laden, bound down the Detroit river at night, as she made the turn of two points from the course leading from the Lake St. Clair channel into the Windmill Point ranges, met and passed the Venus bound up, with the barge Tyrone in tow. Behind the Tyrone and overtaking her was the steamer Chili. Signals for passing port to port were exchanged between the Berlin and both the Venus and Chili, but when the bow of the Berlin, which had made the turn and straightened on her course, was about opposite the port quarter of the Tyrone and about 150 feet away, she came into collision with the Chili, which struck her port bow, inflicting injuries from which she afterwards sank. Under rule 24 of the rules for navigation of the Great Lakes, Act Feb. 8, 1895, c. 64, § 1, 28 Stat. 645 [U. S. Comp. St. 1901, p. 2891], the Berlin had the right of

Digitized by Google

way. *Held*, on the evidence, that the Chili came out from behind the Tyrone, heading toward the course of the Berlin as the latter was approaching, and was in fault for the collision; that the Berlin was also in fault under the circumstances for not allowing more room for passing, having 500 feet of open water on her starboard side.

[Ed. Note.—For cases in point, see Cent. Dig. vol. 10, Collision, § 40.]

Appeal from the District Court of the United States for the Eastern District of Wisconsin.

Fred C. Harvey and Chas. E. Kremer, for appellant.
Frank S. Masten and Harvey D. Goulder, for appellees.

Before GROSSCUP, BAKER, and KOHLSAAT, Circuit Judges.

KOHLSAAT, Circuit Judge. On August 7, 1904, at 9 o'clock p. m., the steamer City of Berlin (hereinafter termed the Berlin) and the steamer Chili came into collision in the Detroit river, just below the turn from the Windmill Point ranges to the course leading to the 800-foot channel in Lake St. Clair. The night was dark but clear, with a light wind. The Berlin, a wooden steamer 298 feet in length and 40 foot beam, bound down the river with 3,000 tons of ore, and towing with a 650-foot line the barge Aurora, also ore laden, while yet above the turn, sighted the steamer Venus coming up the river with her tow, the barge Tyrone, approximately 600 feet behind her. To the stern of the Tyrone, and overhauling her at the rate of 1½ miles an hour, came the steel steamer Chili, 320 feet long and 42 foot beam, also bound up the river, with about 4,000 tons of coal.

At a distance of a mile apart the Berlin and Venus exchanged signals indicating a mutual intention of passing port to port. Shortly afterwards the Berlin and Chili exchanged like signals. The Berlin and Venus approached and passed the turn together. There is some dispute on the record as to the distance apart these vessels were at the time; but we deem it sufficiently proven that the distance was about 200 feet. As the Berlin made the turn into the Windmill Point ranges —being a turn of two points—and when her amidships was about abreast the stern of the Venus, she for the first time discovered the Chili close to the port quarter of the Tyrone, and, as her crew claims, coming out from behind the Tyrone into the course of the Berlin, which it is claimed had straightened out practically 200 feet from and parallel with the course of the Tyrone, heading a little to the westward of and away from the ranges. The Berlin thereupon blew an alarm whistle and proceeded to check her headway, port hard her helm and back. Just what action was taken on board the Chili is in dispute. The two were, however, so well under headway that a collision took place, the Chili's port anchor coming into contact with the Berlin's port bow about 20 feet back of her stem, at an angle of 2 points or about 22 degrees, and remaining in the hole made thereby. The Chili then struck the port side of the Berlin a second time with her stem about 19 feet back of the first place of impact, and tore out an opening 22 feet in length by 8 feet in width. The wale streak of the Chili also raked the Berlin's side past her amidships, doing considerable damage. The place of collision was about abreast of the port quarter of the

Digitized by Google

Tyrone. The Berlin proceeded downstream a short distance, and was beached on Belle Isle in a sinking condition. The injury to the Chili was slight, so that she was able to continue her voyage to Milwaukee, where, on August 16, 1904—nine days after the collision—her owners filed their petition in said District Court to limit their liability, and took the steps to that end by the statute provided. On February 10, 1905, appellant filed his claim in said cause for damages growing out of said collision. To this, petitioners made answer. The cause then proceeded to trial, and a decree was entered for the petitioner against appellant, from which decree this appeal is prosecuted. The only errors relied upon which need be considered are: (1) That the court erred in not finding that the Chili wrongfully came out into the course of the Berlin; and (2) that the court found that the Berlin overswung into the course of the Chili; and (3) that the court erred in not finding in favor of the Berlin.

As above stated, it has been shown by a preponderance of the evidence that, while making the turn, the Berlin and Venus were approximately 200 feet apart, and that the turn was made in the usual way. The general course of the Berlin lay substantially parallel to and about 175 to 200 feet distant from that of the Venus and her tow, the Tyrone. The officers and crews of the Berlin, the Aurora, and the Venus—in all 13 witnesses—say the Berlin straightened out after the turn was made and pursued her course down the river, heading on Belle Isle Point, which would make it about parallel with and 200 feet from the course of the Tyrone. Some of them say she was bearing a little to the westward of that course. The captain of the Tyrone says she straightened out after making the turn and held her course down the river. The lookout of the Tyrone says the Berlin at no time came nearer to the Tyrone than about 150 feet. The testimony of the captain and engineer of the Tyrone and of the officers and crew of the Chili—six witnesses in all—is to the effect that the Berlin came in on the Chili's course so that the place of collision was only from 50 to 75 feet westward of the Tyrone. The fact that the Berlin was struck in her port bow is accounted for upon the theory that when she had overswung from the turn into the Chili's course she attempted to go hard to starboard and thereby recover her course, and was struck by the Chili just as she was in the act of going out to starboard. To do this, she must have made her course from the time she crossed the ranges, in the form of a prostrate letter ∞. It is conceded that when the alarm whistle was blown by her the Chili was distant from her about 900 feet, and that the collision took place within 45 seconds thereafter. If the explanation be correct, she must have overswung 150 to 175 feet and then have recovered sufficiently to have headed out again at an angle of not less than 90 degrees from her overswung course in a little over half a minute. Furthermore, she must have approached so close to the Tyrone before she went about that the officers of the latter would have been justified in apprehending a collision. The evidence shows they had no such fear. From the exhibits and other evidence produced on the hearing, it appears that the Chili struck the Berlin's bow at an angle of approximately 2 points, or 22 degrees. Assuming that the collision occurred 70 feet west of the port quarter

Digitized by Google

of the Tyrone, and that the Chili was going in a course substantially parallel with or bearing in upon that of the Tyrone, as is claimed for her, and that the stern of the Berlin was 278 feet back of the first point of contact, then it follows that the stern of the Berlin would have been across and upon the Tyrone. It is apparent that, if this be correct, the collision could not have taken place within less than 150 feet from the Tyrone. In support of the contention that the Chili made out to port from behind the Tyrone, appellant's witnesses above enumerated testify that the Chili headed across the Berlin's bow after she was straightened out on the Belle Isle course. Appellees' witnesses, on the other hand, testify that the Chili was proceeding parallel to the course of the Tyrone until the alarm sounded; that then the order was given to port a little; then, when she was deemed to be headed in a little too far toward the Tyrone, the order was given to starboard a little and steady. In their petition to limit liability, however, appellees aver that when the danger was discovered the Chili hard-ported, checked, and at once reversed and backed strong. At the time the petition was filed the Berlin had not been raised, and the extent and nature of her injury was not known. This fact, together with the fact that the petition was filed within nine days after the collision, throws suspicion upon the testimony of the witnesses given long afterwards, and, for the purposes of this hearing, the averments of the petition should be assumed to be the truth. If the Chili, while proceeding at the rate of from 8 to 10 miles an hour on a course parallel to or bearing in upon the Tyrone and from 70 to 100 feet distant, and having her bow not more than 45 to 60 feet forward of the Tyrone's stern had hard-ported, checked, reversed, and backed, it would seem as though she could not have failed to come into contact with the Tyrone's port side before her headway was checked. Her wheelsman testifies that just about the time he heard the alarm he received signals to starboard a little, then port, then starboard a little again, and then steady. This must have had the effect to send her to port and away from the Tyrone. This witness also says that when he saw the Berlin she was coming out across the Chili's bow. As the record reads, the captain of the Chili is made to say he could do nothing at the time of the alarm but "sheer back." This would show that he considered the Chili too far to port. It is difficult to believe that an old lake sailor like the captain of the Berlin should allow his boat to swing almost two points beyond the Belle Isle course, so that she headed in between the Chili and the Tyrone. Under the circumstances, it would have been gross carelessness, since he had not only to clear the Tyrone, but to bring his tow clear of the Venus. Nor is it conceivable that the Chili's stem could have struck the Berlin's port bow while the former was heading in on the Tyrone. The theory that the current probably swung her stern to the westward, carrying her bow to port, does not seem to make allowance for the strain of her tow line upon her stern. The evidence does not justify the court in finding that she at any time approached nearer to the course of the Venus and Tyrone than 150 feet. There was, however, no good reason why she should not have stood further to starboard. She must have correctly located the Chili at the time she crossed and came above the Windmill Point ranges, and might

Digitized by Google

easily have given the Chili a wide berth, even though she might have reasonably supposed there was room to pass when she steadied onto Belle Isle Point. Under the circumstances, reasonable caution should have led her to go beyond the usual turning point. There were five large vessels in close proximity to each other, and while she was not bound to take into calculation any error on the part of the Chili, it was carelessness on her part to limit the sailing room of three large vessels to a width much less than that of her own length, when she herself had 500 feet of sea room to her starboard.

The Chili was a well-equipped and powerful steel steamer. She was going up the river unincumbered. She should have kept out of the way of the Berlin and her tow. The Jamestown (D. C.) 114 Fed. 593; The George Presley, 111 Fed. 555, 49 C. C. A. 438; The Lucy, 74 Fed. 572, 20 C. C. A. 660. She came up from behind the Tyrone when she knew the Berlin with her tow was going to pass the Venus and her tow, port to port. She, too, had ample sea room to starboard of the Tyrone. She thrust herself in between the two steamers and their tows, just as they were making the turn from and onto the ranges, and at practically full speed. "She had no right thus to hurl herself, like a projectile in the midst of the vessels before her, taking the hazard of the consequences." The Syracuse, 9 Wall. 672, 19 L. Ed. 783; Am. S. S. Co. v. Am. Steel Barge Co., 129 Fed. 65, 63 C. C. A. 507.

It should also be remembered that the Berlin, as the down-bound steamer, had the right of way:

> "That in all narrow channels where there is a current, and in the rivers St. Mary, St. Clair, Detroit, Niagara, and St. Lawrence, when two steamers are meeting, the descending steamer shall have the right of way, and shall, before the vessels shall have arrived within the distance of one-half mile of each other, give the signal necessary to indicate which side she selects to take." Act Feb. 8, 1895, c. 64, § 1, rule 24, 28 Stat. 645 [U. S. Comp. St. 1901, p. 2891].

We can find no evidence in the record to account for the Chili's action in going so far to port. Like the Berlin, she was both well manned and equipped. We can find in the situation no clue to the theories and motives of those in charge of either ship. We can only accept the facts as we find them. Nor is it possible to accurately ascertain from the testimony of the witnesses the exact distance of the place of collision from the Tyrone's port quarter. That it was not less than 150 feet, we deem fairly established by the whole record. This distance, it will be borne in mind, is less than one-half the length of the Chili, so that her midships would still be just off the Tyrone's port quarter, assuming that she was proceeding at an angle of 45 degrees or more to the line of the ranges and had come out from behind the Tyrone. There was bad seamanship somewhere. By the light of the evidence we discover it upon the decks of both the Chili and the Berlin. Our conclusion, therefore, is that the Chili, at the time of the accident, was heading out onto the course of the Berlin, and that the latter was drawing in towards the ranges somewhat, and that each of them might in the exercise of reasonable care have gone further to starboard and have cleared the other. Ordinary care on the part of each or either of the vessels would have avoided the colli-

Digitized by Google

sion. They were both to blame, and the resulting damages should be borne by them equally.

The decree of the District Court is reversed, with directions to enter a decree in conformity herewith.

(154 Fed. 938.)

CASTNER ELECTROLYTIC ALKALI CO. v. DAVIES.

(Circuit Court of Appeals, Second Circuit. May 30, 1907.)

No. 280.

1. MASTER AND SERVANT—ACTION FOR DEATH OF SERVANT—QUESTION FOR JURY.

Plaintiff's intestate, who was employed in defendant's factory, was killed at about 9 o'clock in the morning by the explosion of a water heater in the room where he was working used to heat the water in a tank in another room 75 feet distant; the connection being by means of pipes from 2½ to 3 inches in diameter. The fire under the heater was found to be out and the heater cold at 12 o'clock the night before, when the night shift came on to work, but, not being in use at night, the foreman who had general supervision of the plant took no action in respect to it, and the fire was rekindled by the janitor at about 8 in the morning. The outside temperature during the night was about 2 degrees below zero, and the room where the heater stood was quite large, with several outside windows, and was not otherwise heated, although there was a large doorway opening into an adjoining room which was kept heated at all times. A crack in the heater observed immediately before the explosion extended diagonally, and did not follow the line of any seam. There was no direct evidence as to the cause of the explosion. *Held*, that such facts and circumstances were sufficient to warrant the submission to the jury of the question whether it was caused by the freezing of the pipes preventing the circulation of the water through them to the tank which ordinarily obviated any danger and rendered an escape valve on the heater unnecessary.

[Ed. Note.—For cases in point, see Cent. Dig. vol. 34, Master and Servant, § 1016.]

2. SAME—LIABILITY FOR NEGLIGENCE OF FOREMAN—NEW YORK EMPLOYER'S LIABILITY ACT.

Under the New York Employer's Liability Act, Laws 1902, p. 1748, c. 600, which makes an employer liable for the negligence of any person in his service "intrusted with and exercising superintendence, whose sole or principal duty is that of superintendence," the owner of a factory is liable for the death of an employé caused by the negligence of a foreman whose sole duty was to superintend the work of a shift of men under him, make out reports, and to have charge of the appliances in the rooms in which they worked.

[Ed. Note.—For cases in point, see Cent. Dig. vol. 34, Master and Servant, §§ 371-373.]

3. SAME—NOTICE OF INJURY.

Notice to a defendant who operated a factory that on a certain date an employé named was killed in defendant's building by reason of the explosion of a hot-water tank maintained in said building at said time, and that the explosion was due to defendant's negligence, is sufficiently specific under the New York Employer's Liability Act, Laws 1902, p. 1748, c. 600, requiring notice to be given of the "time, place and cause of the injury."

[Ed. Note.—For cases in point, see Cent. Dig. vol. 34, Master and Servant, § 806.]

4. EVIDENCE—COMPETENCY—OPINION OF EXPERTS.

While it is competent for expert witnesses to enumerate the various causes which might have produced a given effect, and to state what bear-

Digitized by Google

ing specific facts shown in evidence would have upon the probability or improbability of one or more of such causes being operative at the time and place, it is not competent for them to state an opinion upon all the evidence, as to what cause was in fact operative; that being the final inference to be drawn by the jury.

5. APPEAL AND ERROR—REVIEW—HARMLESS ERROR.

The erroneous admission of the opinions of witnesses as to the cause of an explosion *held* without prejudice, where the material facts were not in dispute, and the opinions were merely arguments therefrom.

[Ed. Note.—For cases in point, see Cent. Dig. vol. 3, Appeal and Error, § 4153.]

In Error to the Circuit Court of the United States for the Western District of New York.

This cause comes here upon writ of error to review a judgment of the Circuit Court, Western District of New York, in favor of defendant in error, who was plaintiff below. The judgment was entered upon the verdict of a jury and was for damages resulting from the death of plaintiff's intestate; it being alleged that his death was caused by the negligence of defendant.

H. C. Meinard and Clinton B. Gibbs, for plaintiff in error.

Bushnell & Metcalf, for defendant in error.

Before LACOMBE, TOWNSEND, and COXE, Circuit Judges.

LACOMBE, Circuit Judge. Plaintiff was at work in what was known as the "cell mounting room" in defendant's plant for the manufacture of caustic soda at Niagara Falls. This room was about 20x30 feet in size, situated on the first floor, with some windows opening outdoors and others in the top for ventilation. Except for the "water heater" hereinafter mentioned, there was no means for heating this room. It communicated by a large door through a brick wall with an adjoining room, known as the "cellroom," which was always warm, being heated by steam night and day. In the cell mounting room there was a hot-water heater variously estimated at from three to five feet in height, which was connected with a large tank, upon which there was a cover, located in the pump room 75 or 80 feet distant. The connection was by two pipes, a discharge and an intake. The heated water in the tank was used in the process of manufacture. Besides receiving the inflow of heated water from the heater, the water in the tank could also be warmed by a steam jet opening into it and leading from the main steam supply in another part of the building. Work was carried on night and day by three eight-hour shifts, but no one worked in the cell mounting room at night. At about 7 a. m. of Monday January 25, 1904, one Thomas, the sweeper or janitor of that part of the building, reached the plant and went into the cell mounting room. He found the fire under the heater "dead out," and the heater cold. It being a part of his duties to keep the fire going and to light it up when it went out, he cleaned out the fire box, and built up a new fire, which he lighted a little before 8 a. m. Some time between 9 and 10 a. m., the day shift being then at work in the room, a small quantity of steam and water was observed oozing through a crack about four or five inches long, running diagonally about two-thirds

Digitized by Google

the way down the heater. Thomas started to report the circumstance to a foreman, but within a few minutes the heater exploded, killing plaintiff's intestate almost instantly. The complaint charged negligence in superintendence of the operation of the heater, and also in maintaining a heater not supplied with steam gauge or safety valve. The undisputed evidence showed that, so long as the connection was open with the large tank, no such appliances were needed, since the intake and discharge insured a constant circulation and the tank acted as an expansion chamber. Thereupon the charge of defective appliances was withdrawn.

The theory of the plaintiff was that the water in these pipes froze, thereby stopping the circulation, so that the imprisoned water, expanding and turning into steam under the influence of the relighted fire, exploded the heater. There was no direct proof of the presence of ice in the pipes, and the fundamental question is whether there was enough in the testimony to send the case to the jury—whether the presence of obstructing ice was a reasonable inference from facts which the jury might find to be proved or whether to reach such a conclusion was mere blind guesswork. Defendant's counsel points out that the janitor testified that he did not think it was below freezing when he reached the room at 7 a. m., and that no one else testifies to the temperature in the cell mounting room; that such room communicated with a lavatory and also with the cellroom, which was always heated, by a large opening which was always open; that these pipes never froze before, so far as any one knows; that water kept in certain cell bottoms in the cell mounting room had never been known to freeze; that the hot water in the tank, kept heated by the steam jet, would have a tendency to cause water to circulate through the pipes, even if the fire under the heater was extinguished; that it would go slowly, and that moving water does not freeze unless it is moving very slowly; that pipes choke up otherwise than by freezing of the water within them; that they become obstructed sometimes by accumulations of dirt or sediment from the water, or incrustations from the water on the inside of the pipes, sometimes from oil solidifying in time by the action of heat upon it, sometimes accumulations of red lead used in making joints would stop pipes up if they were small; that boilers sometimes explode from improper riveting or drilling of the holes that hold the rivets, or from poor or weak material.

On the other hand, it appeared that no one worked in that room at night, which accounts for nonproduction of direct evidence as to its temperature; that it was very cold from 8 p. m. till midnight and (by Weather Bureau Records) that from midnight till 7 a. m. the temperature outdoors was continuously one to two degrees below zero; that there was no heat supplied to the room except such as came from the heater itself or through the opening into the adjoining room, and that there were several windows opening into the room from without—six of them, defendant's witness says—that, so far as appears, the fire had not theretofore been left unlighted during a night of zero weather; that the water in the cell bottoms was pure water from the Niagara river, while the water in the heater was water which had been once heated, one of defendant's expert witnesses testifying that water which

Digitized by Google

has been heated will freeze a great deal more quickly than cold water which has not been subjected to heat; that the connecting pipes, over 70 feet in length, were not covered or protected; that they were from 2½ to 3 inches in diameter, and that defendant's expert testified that he would not expect stoppage by rust scales or sediment in pipes of that size; that other witnesses testified that obstruction through accumulation of foreign matter would be likely to come about gradually and to give indications of its approach by such a reduction of water supply as would challenge attention; that the crack through which the steam and water was oozing is not shown to have been located at any line of rivets, and that there was nothing to indicate any latent defect in the material of which the heater was composed. There was no substantial conflict in the testimony as to the evidential facts, and the inferences drawn from them by the jury, as indicated by the verdict, seem to us reasonable and legitimate. Plaintiff was under no obligation to show the physical presence of ice in the pipes. No doubt it disappeared quickly after the catastrophe.

It is suggested that the proximate cause of the accident was the relighting of the fire, which was the act of Thomas, a fellow servant, for whose negligence defendant would not be responsible, and it was assigned as error that the court declined to submit the question of his negligence to the jury. The evidence, however, does not sustain a finding that Thomas was negligent in lighting the fire. It was his duty to do so generally when he found it out. On this occasion the heater was cold to the touch, but, for aught he knew, the fire might not have been extinguished more than two or three hours. He had no means of knowing that it had been out all night with the water in pipes and heater exposed to a very low temperature. He might fairly assume that whoever had been in charge prior to his coming would have looked after it, or left word for him if there were any risk of its being frozen. The real negligence in the case is to be found in the conduct of the person in charge before Thomas arrived. The testimony showed that Ringleb, an extra foreman, was in charge of the shift from 8 a. m. to 4 p. m. of the day before. When he left at 4 p. m., the heater was operating with a fire in it. He returned at midnight to take the shift till 8 a. m., and found the fire out and the heater cold. Evidently the fire went out during the tour of duty of foreman Erway (4 p. m. to 12 midnight), and so long a time before Ringleb returned that the heater had grown cold. Ringleb did not have the fire relighted during the eight hours of his tour of night duty. The court left it to the jury with instructions that the important question in the case was whether it was negligent in the foreman to fail to keep the fire going, considering the state of the weather, and that in the ordinary course of business the fire would be relighted the next day. They found that the foreman was negligent, and we think their conclusion was correct. Ringleb knew the weather was bitterly cold. When he arrived at midnight, it was two degrees below zero. He knew that the fire had been out so long that the heater was already cold. The jury might fairly find that a man of ordinary prudence would either have had the fire rekindled so as to take the apparatus safely through the long cold night, or else would have passed the word on to the next

Digitized by Google

shift to be cautious about relighting it in view of its abnormally long exposure to cold.

The action was brought under the New York employer's liability act (chapter 600, p. 1748, Laws 1902), which has modified the law of master and servant so as to make the employer liable for the negligence of any person in his service "intrusted with and exercising superintendence whose sole or principal duty is that of superintendence." That Ringleb was within this provision is manifest from his own description of his duties. He testified that:

"As foreman he had charge of the shift of six men working under him. His duties were to look after all that cellroom department. He simply looked after the process work and the men. He had charge of the pump room, one man in there, and the cellroom and the cell mounting room. He simply told the men what to do, and made out reports, and they were required to do what he told them. * * * He had the right to decide whether the heater should be run or not, and it was part of his duties."

The statute above cited requires "notice" to be given within 120 days after the accident, and that said notice shall state the "time, place and cause of the injury." The notice in this case states that on January 25, 1904, Earl W. Davies was killed in one of defendant's buildings at Niagara Falls by reason of the explosion of a hot-water tank maintained in said building at said time, and that the explosion aforesaid was due to defendant's negligence. Such notice complied fully with the requirements of the statute, and is much more specific than the one which was held to be insufficient in Miller v. Solway Process Co., 109 App. Div. 135, 95 N. Y. Supp. 1020, upon which defendant relies.

Exceptions to the admission of testimony have been presented. Several witnesses, some of them experts in heating and steam apparatus and others not, were allowed to answer questions which asked them what in their opinion was the cause of the explosion. The question was improper. It was competent for the experts to enumerate the various causes which might produce such a result, and, their attention being called to any facts in proof (such as diameter of pipe, condition of water, etc.), to state what bearing the existence of those facts would have upon the probability or improbability of one or more of those causes being operative at that time and place. But the final inference from all the facts in proof as to what was the cause which produced the explosion was one for the jury to draw upon consideration of those facts, illuminated by the experience of the experts. We are not satisfied, however, that the admission of the testimony objected to was harmful error. There was no dispute as to any material fact, and the opinions expressed were accompanied by such a statement of the reasoning which led to the witnesses' "opinions" that the answers were but arguments only, of the weight of which the jury was quite well able to judge.

The judgment is affirmed.

Digitized by Google

(154 Fed. 943.)

THE PACIFIC.

(Circuit Court of Appeals, Third Circuit. June 10, 1907.)

No. 15.

1. COLLISION—MOVING AND ANCHORED VESSELS—CONTRIBUTORY FAULT.

Where a moving vessel was clearly in fault for a collision with one at anchor, the latter will not be held in fault because at the last moment she did something that contributed to the collision, or omitted to do something which might have avoided it.

[Ed. Note.—For cases in point, see Cent. Dig. vol. 10, Collision, § 227.]

2. SAME—ACTS DONE IN EXTREMIS.

A dredge which had been engaged for some months in dredging the channel of the Delaware river below Philadelphia, 90 feet to the westward and 175 feet to the eastward of the line of the Edgemoor range lights, at night moved to the eastward 350 feet from the range line and 175 feet outside of the dredged channel, where she anchored for the night, carrying proper anchor lights and with her bow down stream. On her west side lay a tug with the bow up stream. The anchor lines of the dredge extending to the westward were weighted and sunk, while two extending eastward were not. While in such position the large steamship Maling, coming down from Philadelphia and drawing more than 20 feet aft, after rounding the buoy 1½ miles above the dredge, took a course which would have carried her slightly to the eastward of the dredge. Seeing her approaching nearly head on, the watchman on the dredge seized a lantern, and waved it from east to west. The tug, also, as contended by the steamship, gave a signal of a single blast on which the steamship, when about five lengths distant, ported and attempted to go to the westward, but came into collision with the stern of the dredge. The Maling was clearly in fault for being not only on the wrong side of the channel, but entirely outside of and heading away from it. *Held*, that the dredge was not chargeable with contributory fault because of the position in which she was anchored, nor because her port lines were not weighted, since she was not in the fairway of the Maling, and owed her no duty with respect to the lines to the eastward, and neither act, therefore, was a contributory cause of the collision, nor was she in fault for the signal given by her watchman, which, if improper, was an act done in extremis when the dredge was in imminent danger of collision, or of having her lines cut by a vessel out of her proper course. *Held*, also, that the tug was not chargeable with fault because, as alleged, she was carrying sailing lights, nor because she gave alarm signals, neither of which contributed to the collision, but both of which were calculated to warn the Maling of her improper course, nor because of her passing signal, which, if given, was in extremis and in aid of the signals from the dredge.

Appeal from the District Court of the United States for the District of Delaware.

See 116 Fed. 107.

John F. Lewis, for appellant.

J. Parker Kirlin, James J. Macklin, and Henry R. Edmunds, for appellee.

Before DALLAS and BUFFINGTON, Circuit Judges, and LANNING, District Judge.

LANNING, District Judge. This is a collision case. Three vessels are concerned in it—the dredge Pacific, the tug S. A. McCauley, and the steamship Maling. The collision resulted in damage to the

Digitized by Google

dredge amounting, with interest and costs, to the sum of $19,754.70. By the final decree of the District Court all three of the vessels were adjudged to have been in fault, and one-third of the damages was apportioned to each of them. The steamship abides by the decree, and has paid the one-third assessed against it. The tug and the dredge (with her insurers) have appealed, and by the errors assigned have presented questions concerning the negligence and contributory negligence of the several vessels.

The collision occurred in the Delaware river, below Philadelphia, on the night of November 16, 1897. The night was dark, but clear. The dredge was anchored in the easterly side of the river, bow down. The tug was tied to the westerly side of the dredge, bow up, her stern projecting some feet below the dredge's bow, and the dredge's stern projecting some feet above the tug's bow. The steamship, in passing down the river, struck the dredge and did the damage complained of. The dredge for some months had been engaged under employment of the United States government in dredging out the navigable channel of the river 90 feet on the westerly side and 175 feet on the easterly side of the line of the Edgemoor range lights. For some days previous to the collision the dredge had been working on the easterly side of this line. About 5 o'clock in the afternoon, just preceding the collision, she was removed to a point about 350 feet easterly of the line of the range lights, and there anchored for the night. Her anchor lines, extending to the west, toward and across the dredged channel, were weighted and submerged. Those extending to the east, away from the dredged channel, were not submerged. The dredge's lights indicated that she was at anchor. Whether the lights of the tug indicated that she was moving or at anchor is disputed. The steamship, in passing down the river, having rounded the Edgemoor buoy, which was 1 to 1½ miles above the dredge and tug, took a course by which the dredge's lights were kept slightly on the steamship's starboard bow, so that, if she had not subsequently changed her course, she would have passed, or attempted to pass, on the easterly side of the dredge. The nearer she approached the dredge, therefore, the further was she departing from the line of the range lights, by which alone she should have steered her course. It is admitted by her counsel that she was on the wrong side of the river. We are satisfied, too, that, if she had not subsequently changed her course, she would have fouled the dredge's port lines and incurred the risk of doing serious damage to the dredge. The evidence of the steamship's pilot shows that he thought the dredge was on or nearly on the line of the range lights, which were to his stern, and that, instead of guiding his course by those lights, he guided it by the lights of the dredge. The dredge had withdrawn from the ship channel for the express purpose of leaving the channel free and unobstructed during the night. It was the duty of the pilot of the steamship to keep to his starboard side of the channel. Instead of doing so, he not only passed over to his port side of the channel, but beyond it into the shallower water, where the dredge was anchored. He was in charge of a moving steamer which he had under full control. He was going down the river on an ebb tide running two or more miles an hour. While he says that after

Digitized by Google

rounding the Edgemoor buoy he reduced his speed, the master, who executed the pilot's orders, declares that until within about five ship lengths from the dredge the steamship was going at full speed. That the pilot was grossly negligent is perfectly clear, and, as above stated, the liability of the steamship for at least one-third of the damages has been admitted and the amount paid.

The question now to be decided is whether either the dredge or the tug is chargeable with contributory negligence. In The Oregon, 158 U. S. 186, 197, 204, 15 Sup. Ct. 804, 809 (39 L. Ed. 943), the court said:

"Where one vessel clearly shown to have been guilty of a fault adequate in itself to account for the collision seeks to impugn the management of the other vessel, there is a presumption in favor of the latter which can only be rebutted by clear proof of a contributing fault. This principle is peculiarly applicable to the case of a vessel at anchor, since there is not only a presumption in her favor by the fact of her being at anchor, but a presumption of fault on the part of the other vessel which shifts the burden of proof upon the latter."

In that case the Clan Mackenzie was at anchor in the Columbia river outside of the usual track of steamships. Her lookout saw the Oregon bearing down on the Clan Mackenzie. The lookout hailed the Oregon, and continued to shout until just before the collision. Concerning the shouting, the court said:

"It was a case of action in extremis, and, while it is possible that a bell might have called the attention of the approaching steamer, it is by no means certain that it would have done so and, whether the lookout acted wisely or not, he evidently acted upon his best judgment, and the judgment of a competent sailor in extremis cannot be impugned. * * * As we have already observed, it is not sufficient for the Oregon to cast a doubt upon the management of the Clan Mackenzie. In view of the clearness of her own fault, it is not unreasonable to require that she should make the fault of the other equally clear."

In The E. A. Packer (C. C.) 49 Fed. 92, 98, Judge Wallace said:

"I understand the rule to be well established that in every case where a vessel, by her own negligence, or the breach of a statutory rule, places another in great peril, the latter will not be held guilty of negligence because at the last moment she did something that contributed to the collision, or omitted to do something that might have avoided it. It has often been held by the Supreme Court that a vessel which by her own fault causes a sudden peril to another cannot impute to the other as a fault a measure taken in extremis, although it was a wrong step, and but for it the collision would not have occurred, and that a mistake made in the agony of the collision is regarded as an error for which the vessel causing the peril is altogether responsible."

Is the dredge chargeable with contributory negligence? The steamship contends that she was, first, because she did not sink her anchor lines extending to the eastward; second, because, it is alleged, she gave to the steamship an irregular and improper signal by the waving of a lantern; and, third, because, it is again alleged, she was improperly anchored in the fairway of the river. It is true that the dredge's port breast line and port quarter line were not weighted, and that they were obstructions to any vessel that should attempt to pass near to the dredge on her port or easterly side; but, if it be assumed that there was a duty on the part of the dredge toward smaller craft to sink those

Digitized by Google

lines, as she did the lines on her starboard or westerly side, the question here presented is: Did she owe any such duty to this particular steamship? It seems to us that the duty of the dredge to sink its port lines was a duty owing only to those vessels that might lawfully pass on the easterly side of the dredge. The persons in charge of the dredge were justified in assuming that a steamship such as the Maling, admittedly drawing over 20 feet of water, would steer her course by the range lights, and, when passing down the river, would keep to the westerly side of the dredge. Furthermore, the fact that the port lines were not weighted was not a proximate cause of the collision. The steamship did not run into them, nor was her course altered because of them. Her course was altered solely because of signals from the dredge or the tug, or both of them. The fact that, if the steamship should attempt to pass on the easterly side of the dredge, she would foul the dredge's lines, may have been, and doubtless was, the reason for the signal from the dredge for the steamship to pass on the westerly, and not on the easterly, side of the dredge. But just as in actionable so in contributory negligence the cause of the injury must be a proximate and not a remote cause. Here there was no proximate connection between the placing of the unweighted port lines of the dredge and the collision, for the reason that there was an intervening act on the part of the dredge, namely, a signal to the steamship to pass on the westerly side of the dredge, which the pilot of the steamship admits he attempted to obey. If the dredge was guilty of contributory negligence, it was because of the signal she gave to the steamship, and not because she failed to sink her port anchor lines.

Nor, in view of the condition which suddenly confronted the dredge, should she be held guilty of contributory negligence because of the signal given by her to the steamship. As already stated, she was anchored about 350 feet east of the line of the range lights. That was about 175 feet east of the easterly side of the dredged channel. At low tide she was in about 18 feet of water. This large steamship, 325 feet long and drawing 20 feet and 7 inches of water, was approaching the dredge nearly head on, having the dredge slightly on her starboard bow. She had no lawful right there. As against her, the persons in charge of the dredge had the right to assume that the dredge was in a place of perfect safety. Seeing there was imminent danger of a collision, or that the steamship would cut the dredge's port lines, the watchman of the dredge seized a lantern and violently waved it from east to west. At first the pilot of the steamship, evidently thinking he was on or nearly on the line of the range lights, and that there was safe passage for him to the east of the dredge, did not heed the signal. Presently, after having also received, as he says, a signal of one short blast from the tug, he obeyed the two signals, hard-ported his helm, and sought, too late, to clear the dredge by passing to the westerly side. The steamship complains that the waving of the lantern was not an authorized signal; but it was given to a moving steamer, out of her proper course, by an anchored vessel in imminent danger. The dredge might have shown a flare-up light or used a detonating signal, as authorized by article 12 of the act of August 19, 1890 (26 Stat. 325, c. 802 [U. S. Comp. St. 1901, p. 2867]) but she was not required to do so. In

Digitized by Google

the circumstances the signal given did not put the dredge in fault, and therefore did not render her chargeable with contributory negligence.

The remaining ground on which the steamship charges the dredge with contributory negligence—that the dredge was improperly anchored in the fairway—is equally untenable. It must be borne in mind that contributory negligence is necessarily based on an act, or omission to do an act, which is a contributing proximate cause of the accident complained of. If the dredge had been anchored in that part of the river which the steamship had the right to use, the case would present a different aspect. But she was not so anchored. She had taken the precaution just before night to withdraw from the dredged channel to the eastward, and to a place clearly outside of the path within which the steamship should have held her course. Even though she may have been in the fairway of smaller craft, she was outside of the steamship's fairway, and by anchoring there she did not in anywise contribute to the particular accident which is the subject of our present inquiry. We conclude, therefore, that as between the dredge and the steamship the former vessel did not contribute to the injury she received.

The counsel for the steamship also contends that the tug was guilty of contributory negligence for these reasons: First, because she gave to the steamship, when the two vessels were but a short distance apart and when the steamship was still heading for the easterly side of the dredge, a single short blast; second, because the tug blew alarm signals; and, third, because the tug showed sailing lights, instead of anchor lights. There is no doubt that the tug did blow alarm signals after it became evident that there was imminent danger of a collision. They were given in extremis, and were fully justified by the conditions. Article 27 of the act of June 7, 1897 (30 Stat. 102, c. 4 [U. S. Comp. St. 1901, p. 2884]), which has been in force since 1884, expressly provides that in construing the rules of navigation in our rivers, harbors, and inland waters due regard shall be had to all dangers of collision and to any special circumstances which may render a departure from the rules necessary in order to avoid imminent danger. The alarm signals given by the tug were intended to notify the steamship of impending danger. The steamship's pilot recognized them as alarm signals. They were admittedly given after the steamship had ported her helm and changed her course. Consequently they did not in anywise contribute to the collision.

It is further urged on the part of the steamship that the tug displayed lights indicating that she was in motion and not at anchor, and that just before giving the alarm signals she gave one short blast of her whistle, thus indicating an intention of meeting the steamship port to port. The master of the tug denies having given such a signal, though several witnesses on the steamship testify that they heard it. We do not deem it necessary to attempt to analyze the contradictory statements of these witnesses. We may assume, for the purposes of this case, that the tug did first give a signal of one blast of its whistle, and that its lights were sailing, and not anchor, lights. It has already been observed that the watchman on the dredge was waving a lantern from east to west, and thereby signifying his desire to have the steamship port her helm, and pass to the west of the dredge. If

Digitized by Google

the tug had her sailing lights up and gave a signal of one blast, the steamship was thereby notified that the tug also desired her to port her helm and pass to the west. The signals on the dredge and tug were therefore harmonious. No confusion was created by them. Furthermore, the pilot of the steamship declares that he saw the tug's red, green, and white lights, saw the light waved from east to west on the dredge, and heard one blast from the tug's whistle, and, then concluding that the tug was pushing the dredge over to the eastward, gave a reply of one blast from the steamship's whistle, and ported his helm when within four or five ship lengths of the tug. He further declares that he first made out the navigation lights of the tug when the two vessels were "the best part of a mile" apart, that he saw the tug's red and green lights at "about the same time," and that he did not lose either of them at any time before the collision. By his own testimony it thus appears that for a considerable time before he changed the course of his steamship, and until she was within four or five ship lengths of the tug, and notwithstanding the tug's lights indicated to him that the tug was approaching him head on, or nearly so, and was pushing the dredge to the eastward, he still kept the dredge on his starboard bow, and obstinately persisted in continuing his course also to the eastward until the lantern was waved and the tug's signal given. The steamship had not been invited to that side of the river by anything done by the tug or the dredge. She had not been forced there by any contingency. She had culpably ignored the range lights. She had violated a plain duty imposed on her by the rules of navigation to keep to the right on observing the tug's red and green lights. Assuming that the tug did display to the steamship her red and green lights, and that by so doing she, too, violated the rules of navigation for the reason that she was tied to the dredge and not moving, that violation did not induce the steamship to hold to her dangerous course. On the contrary, as already intimated, it was a warning to her to change her course to the west and out of the way of danger. The display of the red and green lights, therefore, did not contribute to the collision. And, if the tug gave one blast after the steamship had approached within four or five ship lengths of the tug, as the steamship's pilot says she did, the danger of collision with the dredge or of fouling her port lines was then so imminent that the signal must be regarded as one given in extremis and wholly ineffective to charge the tug with any contributory fault.

We think the steamship alone should be held responsible for all the damages sustained by the dredge. The decree of the District Court is therefore reversed, and the record remitted to that court, with instructions to enter a decree against the steamship for the amount of the damages, with interest, and also with costs to each of the appellants in this court and in the District Court.

Digitized by Google

(154 Fed. 805.)

HAMPTON STAVE CO. v. GARDNER.

(Circuit Court of Appeals, Eighth Circuit. June 18, 1907.)

No. 2,487.

1. COURTS—JURISDICTION—AMOUNT IN DISPUTE.

Upon all questions of jurisdiction, the sum demanded, not the amount recovered, recoverable or admitted, is the amount in dispute, unless the record proves to a legal certainty either that the sum demanded cannot be as a matter of law the amount in dispute, or that it is, as a matter of fact, a colorable and fictitious amount inserted in bad faith to invoke jurisdiction.

[Ed. Note.—For cases in point, see Cent. Dig. vol. 13, Courts, § 890.

Jurisdiction of Circuit Courts is determined by the amount in controversy, see notes to Auer v. Lombard, 19 C. C. A. 75; Tennent-Stribling Shoe Co. v. Rope, 36 C. C. A. 459.]

2. DAMAGES — OPTION CONTRACT — FAILURE TO FURNISH ABSTRACT — DAMAGE VALUE LESS CONTRACT PRICE—WHETHER OR NOT VENDEE WOULD HAVE BOUGHT IMMATERIAL.

Upon a breach by a vendor of a covenant to furnish an abstract of title in a contract which grants a time option to purchase land, the measure of damages is the difference between the contract price and the value of the land, and the issue whether or not the vendee would have bought the land if the vendor had furnished the abstract is speculative and immaterial.

3. WAIVER—EQUIVALENT OF ESTOPPEL.

The basis of waiver is estoppel, and where there is no estoppel there is no waiver.

Hook, Circuit Judge, dissenting in part.

(Syllabus by the Court.)

In Error to the Circuit Court of the United States for the Eastern District of Arkansas.

George B. Pugh and R. E. Wiley, for plaintiff in error.

N. T. White and Ben J. Altheimer, for defendant in error.

Before SANBORN, HOOK, and ADAMS, Circuit Judges.

SANBORN, Circuit Judge. The first complaint in this case is that the court below refused to sustain a demurrer to the petition, and, at the close of the evidence, to dismiss the action on the grounds that the amount involved was less than $2,000, and that there was no averment or proof that the plaintiff below would have taken the lands if a complete abstract of title to them had been furnished. The plaintiff, Russell E. Gardner, alleged in his complaint, and the evidence proved these facts: On October 30, 1905, the Hampton Stave Company, a corporation, made a written contract with Gardner upon which he paid it $1,000, whereby the Hampton Company agreed to sell and convey, and Gardner undertook to buy, within 60 days, 5,000 acres of land for the sum of $20,000, the Hampton Company agreed to furnish him within a reasonable time proper abstracts of title to the lands, and they mutually agreed that if the titles proved defective the $1,000 should be refunded; if they proved good, and Gardner purchased the lands, the $1,000 should be credited upon the price; and if the titles proved good, and Gardner failed to take and pay for the lands, the $1,000 should be

Digitized by Google

forfeited to the Hampton Company. The Hampton Company furnished an incomplete abstract of title to the lands, and though often requested failed to furnish any other within the 60 days. The land was worth $30,000, and Gardner alleged that he had sustained, and asked to recover, damages to the amount of $11,000.

Upon all questions of jurisdiction, the sum demanded, not the sum recovered, recoverable, or admitted, is the amount in dispute, unless the record proves to a legal certainty either that the sum demanded cannot be, as a matter of law, the amount in dispute (Vance v. Vandercook Co., 170 U. S. 468, 472, 18 Sup. Ct. 674, 42 L. Ed. 1100; Bank of Arapahoe v. Bradley & Co., 19 C. C. A. 206, 72 Fed. 867), or that it is as a matter of fact a colorable and fictitious sum inserted in bad faith to invoke jurisdiction (Hilton v. Dickinson, 108 U. S. 165, 174, 2 Sup. Ct. 424, 27 L. Ed. 688; Wilson v. Daniel, 3 Dall. (Pa.) 401, 404, 1 L. Ed. 655; Smith v. Greenhow, 109 U. S. 669, 671, 3 Sup. Ct. 421, 27 L. Ed. 1080; Schunk v. Moline, Milburn & Stoddart Co., 147 U. S. 500, 504, 13 Sup. Ct. 416, 37 L. Ed. 255; Peeler v. Lathrop, 1 C. C. A. 93, 98, 48 Fed. 780, 786. The vendee claimed damages for the breach by the vendor of a contract of sale of real estate. The legal measure of such damages is the difference between the contract price and the value of the property, and this was $10,000. The record fails to convince that this claim was made in bad faith to impose upon the court below and to fraudulently invoke its jurisdiction, and the amount in dispute was sufficient to sustain the action.

The next objection is that there was no averment or proof that the vendee would have taken and paid for the land pursuant to the contract if a correct abstract had been furnished, and that the court refused to admit evidence offered by the vendor to the effect that he would not have done so. But that evidence was immaterial. What the parties would have done if the vendor had not violated its agreement was a speculative and irrelevant issue. It had committed the first breach of the contract, and had thereby given to the vendee the right to recover the legal damages which resulted from its wrong, and the only issues in the case were the breach and the amount of damages. It is said that the damages for the breach should be limited to the cost of a correct abstract, and that in any event evidence that the vendee would not have taken the property was material in determining the amount of damages. But the vendee's right to purchase was limited by the contract to 60 days. He had paid $1,000 for this option, and it was a valuable one. The vendor had covenanted to deliver to him a correct abstract within a reasonable time, and the vendee had the right to rely upon the performance of this covenant by the vendor and to stake his option upon it. He was not required to presume that the vendor would violate his agreement and to act and to procure an abstract for himself upon that assumption. Nor was the cost of such an abstract the probable effect of the vendor's failure to furnish one. The measure of damages for its breach of this covenant in the contract was the natural and probable loss which the vendee would sustain on account of that breach, and that was the value of the option, the difference between the value and the contract price of the land, and the vendor could not lawfully take advantage of its own wrong by proof that the vendee would

Digitized by Google

not have realized this value if it had performed its covenant. Upon a breach by a vendor of a covenant to furnish an abstract of title in a contract which grants a time option to purchase land, the measure of damages is the difference between the contract price and the value of the land, and the issue whether or not the vendee would have purchased the land if the vendor had furnished the abstract is speculative and immaterial.

Error is assigned because the court rejected evidence that the vendor had title to the lands during the 60 days. But there was no question of title in the case and no reason for this assignment.

At the trial the vendor proved that after the expiration of the option it offered to furnish a correct abstract of title and to convey the land to the vendee at the contract price. But the latter did not accept the offer. In view of this evidence, the court below limited the amount of the recovery to the $1,000 which the vendee had paid for the option and interest thereon, and instructed the jury to return a verdict against the Hampton Company for that amount. This instruction is assailed because the court below refused to submit to the jury the questions: (1) Did the vendee first breach the contract by refusing to take the lands for reasons other than the lack of the abstract before the vendor failed to furnish a correct one? (2) Did the vendee prevent the vendor from furnishing the abstract when requested? And (3) did the vendee by agreement or conduct waive the covenant to furnish the abstract after the contract was made?

The evidence on which the vendor relied for the submission of the first question was the testimony of G. N. Hampton, the president of the vendor, to the effect that on December 14, 1905, Anderson, the agent of the vendee, asked him for an extension of the option which he refused, and Anderson then said that, unless the option was extended so that the vendee would have an opportunity to examine the lands, he would not take them, and the deal was off. But this conversation did not rise to the dignity of a notice by the vendee that he had renounced his option, and it was followed, far within the 60 days, by repeated written demands for a complete abstract and a written notice that, if such an abstract was furnished, the vendee would go ahead, examine the titles, and buy the lands.

The testimony which counsel for the Hampton Company contend entitled it to an answer of the second question by the jury is that when, on December 19, 1905, a written notice was given to the vendor that the abstract it had furnished was insufficient, and a demand was made upon it for a correct one, it demanded a return of the incomplete abstract and of a plat of the lands which had been delivered with it, the vendee loaned the abstract to the agent of the vendor for a few hours, but refused to return it or the plat because, if he did so, he would have no evidence of the insufficiency of the abstract furnished, and Hampton testified that he could not make an abstract without the plat, because he had bought of the Blodgetts 2,000 acres more than the lands sold to Gardner, that he had sold to Gardner the lands west of the river which he bought of the Blodgetts and had secured a warranty deed of them from the Blodgetts, and he could not tell which of those lands were west of the river without a plat. But

Digitized by Google

there must have been a map or a plat or a survey in some of the public offices of the county or counties in which these lands were situated from which the vendor could have determined readily which of the lands in his warranty deed from the Blodgetts were west of the river, and the abstract which its agent borrowed contained a list of them.

The reason why counsel insist that the third question should have been submitted to the jury is that Hampton testified that on the next day after the contract was made he gave to Anderson the insufficient abstract, told him it disclosed the title to the Blodgetts, that the vendor had a warranty deed from them, and that, after he had examined the lands and found whether the values were there, it would furnish an abstract brought down to date, that Anderson assented and took the abstract and plat, that on December 14, 1905, the conversation about an extension of the option which has been recited occurred, and that on December 28, 1905, two days before the option expired, Anderson again asked for an extension, said that unless it was granted the deal would be off, and Gardner would have to lose the $1,000, and Hampton refused to grant the extension. But an estoppel is an indispensable element of a waiver. Where there is no estoppel, there is no waiver. Insurance Co. v. Wolff, 95 U. S. 326, 332, 24 L. Ed. 387; Assurance Co. v. Building Ass'n, 183 U. S. 308, 357, 22 Sup. Ct. 133, 46 L. Ed. 213; Society v. McElroy, 28 C. C. A. 365, 372, 83 Fed. 631, 640; Rice v. Fidelity & Deposit Co., 103 Fed. 427, 435, 43 C. C. A. 270, 278; Insurance Co. v. Thomas, 82 Fed. 406, 408, 27 C. C. A. 42, 45, 47 L. R. A. 450; Williams v. Neely, 67 C. C. A. 171, 180, 134 Fed. 1, 11, 69 L. R. A. 232. And the undisputed evidence in the record is that the requisite elements of an estoppel were lacking. They are: Ignorance of the party who invokes the estoppel, a representation by the party estopped which misleads, and an innocent and detrimental change in reliance upon that representation. As early as December 19, 1905, and December 22, 1905, while there was yet ample time to procure the abstract, the vendor was notified in writing that Gardner would examine it and would buy the property if it furnished the abstract, and a written demand of it was made. The vendor was not ignorant that this abstract was required. No representation of the defendant induced it to believe that it was not, and it incurred no loss by any such belief. There was therefore no waiver, and our opinion coincides with that of the court below that there was no substantial evidence in this case which would have sustained an affirmative answer to either of the three questions which counsel claim should have been submitted to the jury or a verdict for the defendant.

The judgment below is accordingly affirmed.

HOOK, Circuit Judge, dissents from the measure of damages that is applied.

Digitized by Google

(154 Fed. 809.)

NORTHWESTERN STATE BANK OF HAY SPRINGS, NEB., et al. v. SILBERMAN et al.

(Circuit Court of Appeals, Eighth Circuit. July 5, 1907.)

No. 2,552.

1. SALES—PASSING TITLE—EXECUTORY CONTRACT.

A corporation contracted to sell to S. 6,600 fleeces, about 55,000 pounds of wool, which it agreed to deliver to the buyer on or about the 12th to 15th day of June, 1905, for 18 cents a pound, acknowledging payment of $2,000 on account; the wool to be from native sheep in merchantable order, well tied, and honestly packed. At the time the contract was made, the wool was on sheep belonging to the corporation; the latter being required to sever the fleeces and put the wool in condition for delivery. *Held*, that the contract was executory, and that title did not pass until delivery of the wool and payment or tender of the price.

[Ed. Note.—For cases in point, see Cent. Dig. vol. 43, Sales, § 542.]

2. SAME—PAYMENT OF PRICE—MODE OF TENDER—PAYMENT IN CASH—WAIVER.

At the time an executory contract for the sale of wool was made, the buyer's agent paid $2,000 earnest money by a check drawn by the agent on his principals, which was accepted by the seller. After the wool had been delivered, the buyer's agent asked for information as to how the seller desired the balance of the price paid, offering a draft on the buyers or the buyer's bank draft on Omaha, and the seller replied, "that's all right, either one is good"; but, after the wool was loaded on the cars and the amount computed, the seller demanded the currency, whereupon the buyer's agent wired for the money, agreeing that the wool should not be removed until the money was received and paid two days thereafter. In the meantime, the seller sold the wool to another, and, on the buyer's receipt of the money the day succeeding this sale, it was tendered to the seller as soon as he could be found. *Held*, that the seller had waived payment of the price in cash, and that title to the wool passed on delivery.

[Ed. Note.—For cases in point, see Cent. Dig. vol. 43, Sales, § 551.]

3. REPLEVIN—PARTIES.

The physical possession of the wool being in the railroad company, and the buyer's agent having directed the railroad company's agent not to give up the wool, replevin was properly brought by a bank, to which the second sale was made, against the railroad company, and the original buyer's agent.

4. APPEARANCE—REMOVAL OF CAUSES—APPLICATION.

An application by a defendant not served to remove a cause from the state to a federal court is not an appearance to the merits.

[Ed. Note.—For cases in point, see Cent. Dig. vol. 3, Appearance, § 23.]

5. JUDGMENT—PARTIES—PRINCIPAL AND AGENT—RES JUDICATA.

Where, after certain wool in controversy had been sold and delivered to the buyer's agent and by him loaded on the cars of a railroad company, the seller resold the wool to a bank, and the latter brought replevin against the agent and the railroad company, to which the buyer was not a party, the judgment in such replevin suit was not res judicata against the buyer's right to recover against the bank for conversion of the wool.

[Ed. Note.—For cases in point, see Cent. Dig. vol. 30, Judgment, §§ 1218, 1191, 1220.]

6. TROVER AND CONVERSION—PROPERTY REPLEVIED.

Where certain wool growers, having sold and delivered a quantity of wool, resold it to a bank, which brought replevin against the original buyer's agent and the railroad company in possession, and, after delivery of the wool by the sheriff to the bank, it shipped and sold the wool to a purchaser, who so appropriated and changed it as to destroy its identity, the original buyer was not bound to intervene in the replevin suit, but was entitled to maintain conversion against the bank.

Digitized by Google

In Error to the Circuit Court of the United States for the District of Nebraska.

This is an action for conversion, growing out of the following state of facts: The Peters & Williams Company, a corporation of the state of Nebraska, was engaged in conducting a sheep ranch near Hay Springs in said state. The defendant in error Silberman Bros. was a copartnership firm residing and doing business at Chicago, Ill., as wool merchants. One David T. Taylor, residing at Hay Springs, was acting as agent for Silberman Bros. in buying and shipping wool to them. On the 13th of April, 1905, Taylor as such agent made a contract with said Peters & Williams Company for the purchase of the 1905 wool clip of the sheep on their ranch, evidenced by the following written memorandum:

"Hay Springs, Neb., April 13, 1905.

"This is to certify that we have sold to Silberman Bros. 6,600 fleeces, about 50,000 pounds of wool, which we agree to deliver to said Silberman Bros., at Hay Springs, on or about the 12th to 15th day of June, 1905; the consideration being 18 cents per pound, we hereby acknowledge having received the sum of two thousand dollars as part payment thereon, on wool warrant, said wool to be from native sheep in merchantable order and condition, well tied and honestly packed, and will defend the title to said wool against all and every person whatsoever.

"[Signed] Peters & Williams Co.,
"By H. A. Peters."

The two thousand dollars mentioned in the memorandum was paid at the time by check drawn by Taylor on Silberman Bros. The wool in sacks was brought by H. A. Peters, the representative member of said Peters & Williams Company, to the station of the Chicago & Northwestern Railway Company at Hay Springs on the 14th day of June, 1905. The weighing of the wool was begun on that day, and as weighed was branded by Taylor with the letter "P" on one end, and a "diamond S" on the other. The "P" indicated from whom the wool was purchased; and the "diamond S" was Silberman Bros.' brand. When the weighing was complete the sacks were loaded into the cars of said railway company at said station, which cars, the evidence discloses, were ordered by Taylor for the purpose of shipping the wool.

For some reason not satisfactorily explained, on the evening of the 14th of June said Peters went to Chadron, Neb., some 20 miles or more distant, and on the next morning telephoned therefrom to Taylor not to load the wool until he returned. Missing his train at Chadron, he hired a team and drove to Hay Springs, arriving perhaps between 11 and 12 o'clock, and at once called on Taylor at his bank. While there is a conflict in the testimony of Taylor and Peters as to the conversation then had between them respecting the manner of paying for the wool, the testimony on behalf of the defendant in error tended to show that Peters said to Taylor: "It is a little late now, I guess we won't load any wool until after dinner." Taylor replied: "All right. Now, Herman (meaning Peters), for the balance of this money for this wool, I will either give you a draft on Silberman Bros. or our bank draft on Omaha." Peters replied: "That's all right, either one is good." Thereupon they resumed loading the wool into the car about 1 o'clock and finished between 5 and 6 p. m. Taylor closed the car, when the parties returned to Taylor's bank and computed the weights and ascertained the amount due on the wool, amounting to $7,298.02. Thereat Taylor inquired of Peters whether he would have the sight draft on Silberman Bros. or his (Taylor's) bank draft on Omaha. Peters answered that he wanted the currency. Taylor replied, in substance, that if he (Peters), when they first talked over the matter, had said he wanted the currency, he would have had it there to-morrow morning; that he would wire for the money, which would arrive at Hay Springs Saturday morning, the 17th; that he would let the wool stand on the track until the money came. Peters claimed in his testimony that Taylor said he would have the money there Friday morning, the 16th. Taylor then went to the railroad agent and directed him to seal up the cars and not to issue bills of lading to

Digitized by Google

any one. He wired at once, both to Silberman Bros. at Chicago, and to Omaha, for the money. Seven thousand dollars arrived Saturday morning, the 17th, from Omaha; and $7,000 also came from Chicago on the morning of the 18th. Peters went to Taylor's bank on the 16th and asked if the money had come. Taylor's testimony is that he told Peters on the day previous that the currency could not get there before the morning of the 17th, and that Peters answered that he knew the draft or check was good, but he wanted to beat those Jews, Silberman Bros., and offered to pay Taylor the amount of his commission on the purchase of the wool, amounting to about $250.

The evidence shows that at the time the delivery of the wool was due its market value had gone up five or six cents per pound over the contract price. Peters left, and on the 16th day of June made sale of the wool to the plaintiff in error the Northwestern State Bank, which brought an action of replevin in the state court against said Taylor, the Chicago & Northwestern Railway Company, and Silberman Bros., for the recovery of the wool. Silberman Bros. being nonresidents of the state and not found there, no service of the summons was made on them, and they did not appear to the merits of the action.

After delivery of the wool by the sheriff on the delivery bond to the bank, it shipped and sold it to a purchaser, who so appropriated and changed it as to destroy its identity. Thereafter Silberman Bros. brought this suit against the bank and others for conversion of the wool, and on trial to a jury obtained verdict against the bank for the sum of $11,779.40. To reverse the judgment rendered thereon the bank prosecutes this writ of error.

H. C. Brome (A. H. Burnett and A. G. Fisher, on the brief), for plaintiffs in error.

Irving F. Baxter (James H. Van Dusen, on the brief), for defendants in error.

Before SANBORN and HOOK, Circuit Judges, and PHILIPS, District Judge.

PHILIPS, District Judge, after stating the facts as above, delivered the opinion of the court.

It is to be conceded that the contract of April 13, 1905, was executory in its character. While it recites that Peters & Williams Company have sold to Silberman Bros. so many fleeces, or about 50,000 pounds of wool, the contract further disclosed that several things were thereafter to be done on the part of the vendor in execution of the transaction. The fleeces at that time were on the sheep, and, as the sheep themselves were not sold, it remained for the vendor to sever the fleeces and put the wool in condition for delivery. The vendor was to deliver it at a certain time and place, and the wool was subject to the further condition of being taken from native sheep and in good merchantable order and condition. So that until these things were done by the vendor, and these conditions were complied with, the contract could not be executed on its part. If the sheep had died before the fleeces were severed, or if after being severed, and before the wool had been delivered at Hay Springs, it had been destroyed by fire or other means, the loss would have fallen upon the vendor.

It is furthermore to be conceded that a sale of personal property to be complete by delivery at a given place, and at a certain price to be paid by the vendee, in the absence of an express contract at a later date, the implication of law is that the payment is to be made in cash at the time and place of delivery. While the title to the property would not pass to the vendee until the purchase money was paid,

Digitized by Google

it was competent for the parties at the time for delivery to agree either upon an extension of the time of payment or as to the manner thereof. If, without more, the wool when brought to the station at Hay Springs had been weighed and prepared for shipment, notwithstanding Silberman Bros. had placed upon it letters identifying it as their property, and it had been placed in cars for shipment, such acts, in and of themselves, would not have been sufficient to pass the title to the vendee without payment of the purchase money, and in cash, if the vendor had then and there insisted upon such character of payment.

To entitle the plaintiff below to recover in this action, it devolved upon it to show, by satisfactory proofs, that the right of the vendor to exact payment in cash was waived by consenting to some other mode of payment. The evidence shows that the $2,000 paid as earnest money at the time the contract was executed was by check drawn by Taylor on Silberman Bros., without objection; a fact which reasonably led Taylor to expect that a like method of payment would be acceptable when the balance of the purchase money became due. When the wool was brought to the station, and the process of weighing and delivery was complete, Taylor made direct inquiry of Peters as to how he wanted the payment made—whether by draft on Silberman Bros. or by draft of Taylor's bank on Omaha, meaning, of course, the correspondent bank of Taylor's bank at Omaha. That was a clear indication that Taylor did not suppose or apprehend that the presence of so large an amount of currency was expected by Peters to be paid over to him. Payment in such amount in actual cash money, as every business man nowadays knows, is quite unusual. If it was the purpose of Peters to demand the currency, the time for him, as an honest man, to say so was when the question was first put to him by Taylor. That would have enabled Taylor to obtain the money from Omaha before the wool was delivered in the cars, as the law under such circumstances would have accorded this reasonable opportunity for obtaining the currency. Not until after the wool was sacked, weighed, and placed in the cars ready for shipment, and after Peters' mysterious disappearance and visit to Chadron, where his lawyer resided, did he make demand for the currency, when it was then too late for Taylor to obtain the currency, even by telegram, by the coming morning; but he said to Peters that the wool would not be shipped until the money came, not later than the morning after the 16th. In view of his misleading statement when first asked as to the manner of payment, the law would accord to Taylor a reasonable time after demand for the currency in which to produce it.

The foregoing statement of facts is predicated of the evidence developed by the testimony on behalf of the defendant in error, for the reason that in its charge to the jury the court sharply presented the questions of fact on the contradictory statements of the respective witnesses to the determination of the jury, and their verdict authorizes the presumption that they credited the testimony of the witnesses on behalf of the defendant in error and discredited the version given by the witness Peters; the jury doubtless believing that his whole conduct in demanding the currency was influenced by the rise in the mar-

Digitized by Google

ket value of the wool, and after he had taken advice as to how he could evade the contract.

It is also to be assumed, from the charge of the court, that the jury found the fact to be that after Peters consented that the payment could be made by check, as indicated, the wool was stamped with Silberman Bros.' brand, loaded into the car, and the car closed by Taylor; that the delivery was complete; that all that then remained to be done by Taylor was to tender the check or draft; and that a demand for the currency would not reinvest the property in the wool either in Peters & Williams Company or their vendee—the evidence further showing that Peters put himself out of the way so that he could not be found to make tender of the money immediately when it did come, but it was made to him as soon as he could be found. That the physical possession of the wool was in the railroad company is not disputable, and, as Taylor had directed the agent of the railroad company not to give up the wool, the action of replevin was properly brought against the railroad company and Taylor to recover the possession, if the bank was entitled to the wool. There having been no service of summons in the replevin suit on Silberman Bros., they did not enter appearance in the cause. Although the record shows that they sought to remove the cause from the state court to the United States Circuit Court, that was not an appearance to the merits. Wabash Western Railway Company v. Brow, 164 U. S. 271, 17 Sup. Ct. 126, 41 L. Ed. 431.

Counsel for plaintiff in error presents two principal contentions: (1) That, as Taylor was the agent acting for and on behalf of Silberman Bros., they are bound by the proceedings in replevin; and (2) that after personal property has thus been replevied the party defendant to such action cannot maintain an action in trover for the wrongful conversion of such property against the plaintiff therein.

The Supreme Court of Massachusetts, in White v. Dolliver, 113 Mass. 400, 18 Am. Rep. 502, after review of the authorities of that court, and discussion of the reason of the law, held that one whose property has been taken under writ of replevin in a suit against his agent or bailee can retake it from the party plaintiff, to whom it is delivered, even during the pendency of that action. This ruling has been approved in Westbay v. Milligan, 74 Mo. App. 179; Coen v. Watkins, 62 Mo. App. 502, 505. Cobbey, in his work on Replevin (2d Ed.) § 1233, states the law as follows:

> "One whose property has been replevied by a writ against his agent or his bailee can retake it by replevin from the plaintiff in the first action, even during the pendency of that action. One who is a stranger to a replevin suit, and claims the property, may bring replevin against any one except the officer serving the writ. While the property is in his possession it is in custodia legis and is not repleviable. Where personal property is in the hands of the plaintiff in an action of claim and delivery, a third person who claims it is not obliged to intervene, but may institute another action of claim and delivery for the property."

These authorities stand to recognized principles of law. As Silberman Bros. were not in fact brought before the court in the replevin suit, no judgment therein could be rendered against them; nor could a judgment therein against Taylor be regarded as res adjudicata as

Digitized by Google

to Silberman Bros. The settled rule is that, to make a judgment conclusive against a person not named as a party thereto, it must appear that he sustained mutual or successive relationship to the same right of property or subject-matter, such as a personal representative, heir, devisee, legatee, assignee, voluntary grantee, judgment creditor, or purchaser with notice of the fact. Henry v. Woods, 77 Mo. 277. Greenleaf on Evidence, vol. 1, § 523, says:

"No man ought to be bound by proceedings to which he was a stranger. * * * Under the term 'parties,' in this connection, the law includes all who are directly interested in the subject-matter, and had a right to make defense, or to control the proceedings, and to appeal from the judgment. This right involves also the right to adduce testimony, and to cross-examine the witnesses adduced on the other side. Persons not having these rights are regarded as strangers to the cause."

No one is a privy to a judgment whose succession to the rights of property thereby affected occurred previous to the institution of the suit. Freeman on Judgments, par. 162. In Butterick v. Holden, 8 Cush. (Mass.) 233, it was held that, where H contracted to sell land to A, and in wrong of A afterwards conveyed to B, although A had sued H and B in equity for specific performance and failed, yet this judgment was no bar to an action in favor of A against H for breach of contract. In the equity suit, the whole subject-matter of the contract, the consideration, and breach thereof, were gone into and examined, and the court dismissed the bill. Shaw, C. J., said it was a suit between others. "A judgment for the defendant in that suit does not tend to negative defendant's breach of contract, on which this action at law is brought."

The action against Taylor was wholly possessory. The only recovery the bank could have against him would be for the possession of the property, or the value thereof if the possession were in Taylor at the time of the rendition of the judgment. Silberman Bros. had no right to control or direct the defense in that action. They had no right to except to any evidence that might be adduced, or to any ruling of the court, on the trial of that cause. They would have no right to have any judgment rendered therein reviewed. They are not claiming any right or title through or under Taylor. Their right to the property occurred previous to the institution of the replevin suit, and prior to the purchase by the bank. The bank took their property and converted it to its use. It destroyed its identity so that they could not follow and recover it in kind against the bank's assignee.

The underlying foundation of the rule, asserted by the learned counsel for plaintiff in error, which forbids a third person from maintaining the action of replevin or of trover for property taken under writ of replevin, rests upon the sense of legal propriety, that the property being in custodia legis, held by the officer subject to the order of the court, to be surrendered to the rightful claimant in the action, courts will not tolerate the attempted interception of such property in the custody of the law, or to obstruct the function of the court in surrendering it to one or the other of the litigants before it.

In Sanborn v. Leavitt, 43 N. H. 473, the court said:

Digitized by Google

"The writ of replevin requires the sheriff to take the property, not as in an attachment, for the purpose of retaining it, but for the sole purpose of forthwith delivering it to the plaintiff in replevin, who, by the very nature of the process, claims it as his own. When the property has been so delivered, it may be replevied at the suit of another claimant against the party, since he holds this as he does any other property. But the law could not countenance so absurd a thing as to give to every party who claims the property the right to interfere and prevent the officer from doing what it is the purpose of the writ of replevin to require him to do. The property, while it is passing through the hands of the officer, is in the possession of the law, and the law could not be so inconsistent as to issue to its officers, compelled to act at their peril, commands wholly incompatible with each other."

This is aptly illustrated in Donohoe v. McAleer, 37 Mo. 312, where the plaintiff in replevin, after delivery of the property to him by the sheriff, sold and transferred it to a third person. The defendant in his answer set up this fact in abatement of the suit. Wagner, Judge, said:

"When he (the plaintiff) had so reduced it to possession, he had a right to exercise all rights of ownership over it, including its sale and transfer, without impairing any right in the prosecution of his action. Had he been defeated in his suit after he had parted with the property, the defendant would have been entitled to the full value. As it was, the plaintiff ought to have recovered damages for the illegal detention."

Accordingly, in Coen v. Watkins, supra, it was held that, after the property under the delivery order had been turned over by the sheriff to the plaintiff, it became subject to the claim of a third person asserting title thereto.

Under the charge of the court, the jury presumptively found that Silberman Bros. were the owners of the wool when the bank instituted the replevin proceedings. Having thereafter disposed of the property, and converted the proceeds to its use, it became liable in this action to Silberman Bros. for the value of the property at the time of the conversion.

The judgment of the Circuit Court is affirmed.

(154 Fed. 815.)

THE BUFFALO.

(Circuit Court of Appeals, Second Circuit. June 15, 1907.)

No. 278.

1. MASTER AND SERVANT—INJURY TO SERVANT—LONGSHOREMAN EMPLOYED ON VESSEL.

The rule of the maritime law that a vessel is not liable in rem for an injury to a seaman through the negligence of the owner or master does not apply to the case of a longshoreman who is employed by the owner of a vessel to work thereon and is injured through being given an unsafe place to work; such case being governed by the ordinary rules relating to master and servant.

[Ed. Note.—For cases in point, see Cent. Dig. vol. 34, Master and Servant, § 211.]

2. SAME—UNSAFE PLACE TO WORK—FAILURE TO WARN SERVANT OF DANGER.

Libelant was a longshoreman employed in shoveling ore at the docks, and was sent by his employer, with others, on the employer's scow to assist in lightening an ore steamer which had gone aground. After the

Digitized by Google

steamer had been floated the scow proceeded to retransfer the ore which had been taken out, and libelant and others were sent on the scow to shovel ore into the buckets. These were moved by a hoist or derrick mounted on a revolving platform, which also could be moved on tracks the length of the scow. The work of reloading was commenced in the night, and libelant had never worked on the scow before, or on any one having such fore and aft movement of the derrick, and he was given no warning or instructions. While he was resting on his shovel after he had filed a bucket and it had swung away from him, the derrick was moved along the rails, he was struck from behind, and, throwing out his arm to save himself, it was run over and crushed. *Held*, that the injury was not due to the negligence of a fellow servant, it not appearing that the engineer operating the hoist was negligent, but to the failure of the master to warn libelant of the danger from the movement of the derrick, which rendered the place where he was set to work dangerous.

3. SHIPPING—LIMITATION OF LIABILITY—PARTS OF VESSEL.

A traveling steam hoist or derrick, mounted upon a fuel scow specially designed to be used with such a hoist, and from which, although removable, it had been removed but once in 14 years, is a part of the vessel, within the meaning of the limitation of liability statute (Rev. St. § 4283 [U. S. Comp. St. 1901, p. 2943]).

Appeal from the District Court of the United States for the Western District of New York.

For opinion below, see 148 Fed. 331.

H. H. McKeehan and Harvey L. Brown (Hoyt, Dustin & Kelley, of counsel), for appellants.

Lawrence J. Collins (Thos. C. Burke, of counsel), for appellees.

Before LACOMBE, TOWNSEND, and COXE, Circuit Judges.

LACOMBE, Circuit Judge. The Buffalo was a large, rectangular, flat-bottomed scow, intended for the lightering of coal. Her hold was divided into four compartments. Running fore and aft upon either side of her deck was a railroad track. A McMiler hoist or derrick mounted upon car wheels was placed on these tracks, so that it could run forward and backward the entire length of the tracks. This McMiler hoist consisted of a house built upon a turntable and containing an engine, boiler, and machinery. From one part of the house extended the boom of the derrick, from the end of which the bucket was raised and lowered. The engineer who controlled the circular movements of the arm, the raising and lowering of the bucket, and the fore and aft movement of the entire structure on the rails was stationed in this house, which was inclosed on all sides with the exception of an opening on the side from which the boom extended. The engineer faced the opening, and the boom was in the direct line of his vision, so that he could observe the movement of the bucket as it was raised and lowered and could see that it was properly placed. When the boom revolved the whole structure upon the turntable revolved with it. By reason of the fore and aft movement of the McMiler hoist upon the rails it could be readily shifted, so that the bucket might operate in any desired compartment. This movement also subserved another purpose. It would sometimes happen that, when the bucket was in line above a particular compartment, the place outside the scow which it was necessary that the bucket should reach did not lie upon

Digitized by Google

the circle described by the radius of the revolving boom. It would then be necessary to supplement the movement of revolution by a fore and aft movement of a few feet upon each occasion when the bucket was raised or lowered. About 1 a. m. of September 30, 1904, the libelant, with a gang of men, was at work in the compartment furthest aft loading ore into the bucket. The bucket being loaded, libelant rested on his shovel, his back being towards the hoist, while the bucket rose and the boom swung over towards the steamship Venezuela, into which the ore was being delivered. In order to effect delivery of the bucket into the proper hatch of the steamer, the engineer moved the hoist a few feet further aft, it struck the libelant, and in trying to save himself from falling his arm was thrown over one of the rails and crushed by the moving wheel.

The appellants contend that there can be no recovery in rem against the scow under the decision of the Supreme Court in The Osceola, 189 U. S. 158, 23 Sup. Ct. 483, 47 L. Ed. 760. In answer to that contention it is sufficient to say that libelant was not a member of the crew of the scow. He had been employed for three weeks as an ore shoveler on the docks of the claimants in Buffalo. Information having been received that the Venezuela was aground somewhere on the north shore of the lake, they hurried a number of their ore shovelers from the dock where they were at work aboard the scow, which was then empty, to assist the coal shovelers of the scow in lightening the steamer till she was got afloat and then in returning the ore on board of her. Libelant was merely a stevedore or longshoreman in the employ of appellants, and the case is to be determined by ordinary rules governing the relation of master and servant.

It is further contended that the proximate cause of the accident was the negligence of a fellow servant—the engineer. We are unable to find that the latter was guilty of any negligence. It is not shown that he moved the structure at any unaccustomed speed or in any unusual way. His entire attention was necessarily concentrated upon his own work, quite sufficient fully to occupy it, regulating the movements of the hoist, revolving turntable, and bucket, so as to move the ore from the one place to the other. If he carefully watched the bucket as it swung out board, he could not at the same time keep looking over his shoulder to see that the shovelers were keeping out of the way. He was entitled to assume that their avoidance of bucket, boom, or hoist would be secured, either by warning given to them or by their own attention to what was going on. Manifestly the compartment in which libelant was injured was an unsafe place to work, compared with the dock upon which he was accustomed to load buckets. His previous occupation had taught him that he must look out for a moving bucket and a swinging boom, and this he did, as the testimony shows. But for workers in the aft compartment on this occasion there was an additional peril, arising from the circumstance that the whole turntable and superstructure moved fore and aft over a part of the place where they were at work. He was put to work in this dangerous place after midnight, without a word of warning, without any caution to look out for any other movement than that of the bucket and the boom. This was negligence on the part of the master, and its consequences can be avoided

Digitized by Google

only by showing that the circumstances are such that it is to be presumed that libelant must have assumed the risks of an employment whose dangers were obvious to any person of reasonable care and prudence.

But the testimony in this case will not sustain any defense either of assumption of risk or of contributory negligence. He knew of the danger from moving bucket and boom, testified that he watched them carefully, and no one disputes that testimony. He had never before worked on any such scow, with fore and aft movement to the revolving structure. He went on board the tug which took the scow over to the grounded steamer about noon of September 29th. During that trip the machinery was not in action. They reached the Venezuela and began discharging her ore about 2 p. m.; libelant working in the hold of the Venezuela. She floated at 10 p. m., whereupon the ore shovelers were transferred to the scow and put to work in No. 2 compartment, where they worked till it was emptied about 1 a. m. They then walked around the hoist to No. 4 compartment (aft) to begin work there. There is no testimony to show that during the three hours they were at work in No. 2 the hoist was moved fore and aft over any part of that compartment. Apparently that compartment and the hatch of the steamer were in such position relative to each other that it was not necessary to move anything but the boom and bucket. Certainly up to the time that libelant went to work in No. 4 there had been nothing to warn him that a danger additional to those which attended his work on the docks lurked in its dim-lit obscurity. Nor had he been long enough in No. 4 to receive such warning through the teachings of experience. He was struck while the second or third bucketful was swinging aloft. While we do not think the master was under any obligation to have a man specially stationed to call out when the hoist moved aft after each swing outwards of the boom, as the swing of the boom would itself indicate the time when such movement might be looked for, we are satisfied it was his duty to give warning generally to those whom he put to work there at midnight of dangers which their past experience might not have led them to expect and which at that hour were certainly not obvious. The findings of the district judge as to the merits of the case are therefore affirmed.

The libel was filed against the "lighter or fuel scow Buffalo, her rig, engines, boilers, boats, tackle, buckets, etc." The owners claimed the benefit of the limitation of liability acts, and the district judge held that they were entitled thereto. In assessing the valuation of the interest of the owners in the vessel there was included $3,000 for "engines and machinery," which is assigned as error. From the description of the scow already given it is apparent that it is an easy matter to remove the "McMiler hoist." It would be necessary only to jack the hoist up and run it off on rails properly placed, and the hoist bears no part in the navigation of the vessel. Nevertheless the hoist is a useful and most important part of this variety of lighter, or "fuel scow," as it is called. Her engineer testified that during 14 years' service the hoist had been removed only once. She was built expressly for use with such a hoist. The object for which she was put to service was the combination of her carrying capacity with ma-

Digitized by Google

chinery and power, resident in herself, which could fill up or empty her several compartments without any assistance from outside. The statute reads:

"The liability of the owner of any vessel * * * shall in no case exceed the amount or value of the interest of such owner in such vessel and her freight then pending." Rev. St. § 4283 [U. S. Comp. St. 1901, p. 2943].

The appellants rely principally upon a decision in the First Circuit (Swift v. Brownell, Holmes, 497, Fed. Cas. No. 13,695), in which it was held that the word "ship," as used in the statute, did not include, in the case of a whaler, the "whaling outfits, consisting of whaling gear, casks, provisions, and supplies for the crew and trading, known as 'slops.'" The court found that these were "appurtenances" of a whaling vessel, and that, because Congress had not used the word "appurtenances," which appeared in the English limitation of liability statute, it was its evident intention not to include that which is "no part of the ship in the language of merchants, but only appurtenant to it as necessary for a special voyage or adventure." This case, which was decided in 1875, gives a narrow construction to the clause. Subsequently (1893) the Supreme Court held that the word "freight," used in the same clause, was not to be given a narrow or technical definition. The court says:

"The real object of the act in question was to limit the liability of vessel owners to their interest in the adventure. Hence, in assessing the value of the ship, the custom has been to include all that belongs to the ship and may be presumed to be the property of the owner, not merely the hull, together with the boats, tackle, apparel, and furniture, but all the appurtenances, comprising whatever is on board for the object of the voyage, belonging to the owners, whether such object be warfare, the conveyance of passengers, goods, or the fisheries." The Main v. Williams, 152 U. S. 131, 14 Sup. Ct. 486, 38 L. Ed. 381.

Although the precise question was not before the court in the case of The Main, which dealt only with passage money and prepaid freight, the general rule of interpretation laid down in that case should be followed, and the clause construed broadly to cover what the owners have at risk on the vessel for the object of the adventure. Upon such a construction the McMiler hoist should be included with the vessel. The decree of the District Court is affirmed, with interest and costs.

TOWNSEND, Circuit Judge, heard argument, participated in the consultations, and voted to affirm for the reasons stated, but did not see this opinion.

Digitized by Google

(154 Fed. 820.)

HOWE v. HOWE & OWEN BALL BEARING CO. et al.

(Circuit Court of Appeals, Eighth Circuit. May 7, 1907.)

No. 2,501.

1. COURTS—FEDERAL COURTS—JURISDICTION—SUSTAINED IF ANY PART OF RECORD DISCLOSES REQUISITE FACTS.

The jurisdiction of a national court may not be renounced or denied where the facts requisite to confer it appear directly or by just inference from any part of the record.

[Ed. Note.—For cases in point, see Cent. Dig. vol. 13, Courts, § 816.]

2. SAME—AMOUNT—LEGAL CERTAINTY OF INSUFFICIENCY REQUISITE TO DISMISSAL.

A suit cannot be properly dismissed by a Circuit Court as not substantially involving a controversy within its jurisdiction, unless the facts when made to appear on the record create a legal certainty of that conclusion.

[Ed. Note.—For cases in point, see Cent. Dig. vol. 13, Courts, § 816.]

3. SAME—JURISDICTION—FACTS—CONCLUSION.

The matter in dispute was the undivided half of a patent for an invention. There was evidence that 21/155 was sold for $5,000 17 months before the suit was commenced; that the defendant was a citizen and resident of Missouri; that one of the complainants was a corporation of Maine, and the other a stockholder, director, and president thereof; and that the articles of incorporation recited his residence Evansville, Ind.

Held, there was sufficient evidence to sustain the conclusion of the lower court that the value of the property involved in the controversy was more than $2,000, and that the citizenship of the parties was diverse.

[Ed. Note.—For cases in point, see Cent. Dig. vol. 13, Courts, §§ 885, 886.]

4. CONTRACTS—BREACH OF SUBORDINATE COVENANT NO DEFENSE—ACTION FOR DAMAGES.

A breach of a covenant, which does not go to the whole consideration of a contract, but is subordinate and incidental to its main purpose, does not constitute a breach of the entire agreement, does not authorize the injured party to rescind the contract, but he is still bound to perform his part of it, and his only remedy is a recovery of damages for the breach.

[Ed. Note.—For cases in point, see Cent. Dig. vol. 11, Contracts, § 1178.]

5. SAME—EXECUTORY AGREEMENT IN CONSIDERATION OF EXECUTED CONTRACT NEITHER UNILATERAL NOR OPTIONAL—FACTS—CONCLUSION.

The owner of one-half of a patent conveyed his half to a third person in trust to form a corporation, to convey his interest in the patent to this corporation for one-half of its stock, and to so distribute his stock that the trustee should receive 21⅔/250 of his share and should hold 215⅚/250 thereof in trust for his wife and child. The owner of the other half of the patent at the same time, in consideration of this deed, agreed with him in writing to convey his half of the patent to the corporation for one-half its stock and to convey to the trustee as his own personal property 21⅔/250 of his share in consideration of services rendered and to be rendered by the latter in the organization and promotion of the corporation.

Held: (1) This was not a unilateral contract or an agreement for an option, but an executed agreement on the part of the first party and an executory one on the part of the second party.

(2) The consideration of the executory agreement was the executed agreement, and it was no defense to a suit for the performance of the former that the trustee had failed to render services to promote the company, because his contract in that regard was subordinate and incidental to the main purpose of the agreement, and did not go to its whole consideration.

[Ed. Note.—For cases in point, see Cent. Dig. vol. 11, Contracts, § 8.]

Digitized by Google

6. SPECIFIC PERFORMANCE—PRIOR AGREEMENT TO CONVEY TO ANOTHER NOT A PARTY NO DEFENSE.

A prior agreement of a defendant to convey a part of the property in controversy to a third person, who is not a party to the suit, is no defense to a suit for specific performance of a subsequent agreement to convey the same property, because the decree cannot bind or injuriously affect the rights or interests of the absent first contractor.

7. TRUSTS—FIDUCIARY RELATION—BETRAYAL OF CONFIDENCE OR BREACH OF DUTY INDISPENSABLE TO AVOID RIGHTS ACQUIRED THEREUNDER.

Some betrayal of confidence or breach of duty is indispensable to the avoidance of titles or rights acquired of his correlate by one in a fiduciary relation.

[Ed. Note.—For cases in point, see Cent. Dig. vol. 47, Trusts, § 153.]

(Syllabus by the Court.)

Appeal from the Circuit Court of the United States for the Eastern District of Missouri.

This is an appeal from a decree for the execution of a trust created by a conveyance, and for the specific performance of a contract to vest the title to a patent for an invention in a corporation and to distribute its stock among those entitled thereto in accordance with their agreed interests. The contract was in these words:

"For and in consideration of one dollar and other good and valuable considerations, receipt whereof is hereby acknowledged, I hereby transfer, assign and set over to James G. Owen my undivided half interest in and to a certain patent and invention, No. 678,619, on a ball journal bearing for railroad and street cars, etc., issued to A. F. Howe and E. C. Owen, July 16th, 1901.

"In trust for the following purposes:

"1st. Said James G. Owen shall organize a corporation and transfer to said corporation my undivided interest in and to said patent and invention, on the transfer by said A. F. Howe to said corporation of his undivided one-half interest in and to said patent and invention, in consideration for the entire capital stock, that is for said entire patent interest of said Howe and said Owen.

"2nd. To transfer to T. F. Leyden, 10/250 of said capital stocks.

"Said Howe to transfer from his capital stock a like proportion, both in consideration of the advance by said Leyden of $5,000.00, as demanded.

"3rd. From the stock in said trustees hands 5/500 to be transferred to W. W. Wilcox. Said Howe to transfer a like amount in consideration of services rendered.

"From the balance of said capital stock in said trustees' hands, he shall retain as his own personal property 21⅔/250 out of said capital stock and said Howe shall transfer a like amount to said James G. Owen in consideration of services rendered and to be rendered in the organization and promotion of said Company. The balance shall be held by him in trust for Mrs. Hattie Owen and child James G. Owen, Jr., as their interest may appear, during the full term of patent, reissues, etc.

"Dated Chicago, Illinois, April 29th, 1902.

"Elmo C. Owen.

"Attest:

"F. M. Williams,

"A. F. Howe.

"I hereby consent and agree to the above conditions this 29th day of April, 1902. A. F. Howe."

James G. Owen organized the corporation with a capital stock of 10,000 shares of $100 each, but Howe refused to convey his undivided half of the patent to this corporation, and the corporation and Owen exhibited their bill to induce him to perform his contract. There was a decree that Howe and Owen as trustee should convey their respective half interests in the patent to the corporation; that one-half of its capital stock should be issued to Howe and the other half to Owen; that each of them should convey to Thom-

Digitized by Google

as F. Leyden 10/250 of his stock and to Webster W. Wilcox 5/500 thereof and that Howe should transfer to Owen 21⅔/250 of the stock received from the corporation by him as provided in the agreement.

Luke E. Hart (Richard C. Hart, on the brief), for appellant.

Chester H. Krum (Chappell B. Crawley, on the brief), for appellees.

Before SANBORN and HOOK, Circuit Judges.

SANBORN, Circuit Judge, after stating the case as above, delivered the opinion of the court.

The jurisdiction of the court below is challenged in the brief and argument, but the ruling of that court upon the question of jurisdiction is not assigned as error, and the questions regarding it now urged were probably never called to its attention. They are: Was there sufficient evidence that the value of the property in dispute was $2,000 exclusive of interest and costs? And was there sufficient evidence that the complainant Owen was a citizen and resident of a state other than Missouri, the state of the citizenship and residence of the defendant Howe? The jurisdiction of a federal court may not be renounced or denied where the facts requisite to confer it appear either directly or by just inference from any part of the record. Briges v. Sperry, 95 U. S. 401, 403, 24 L. Ed. 390; Gordon v. Third National Bank, 144 U. S. 97, 103, 12 Sup. Ct. 657, 36 L. Ed. 360; Myers v. Hettinger, 37 C. C. A. 369, 370, 94 Fed. 370, 371; Ward v. Manufacturing Co., 5 C. C. A. 538, 540, 56 Fed. 437, 439; Railway Co. v. Ramsey, 22 Wall. 322, 328, 22 L. Ed. 823; Express Co. v. Kountze, 8 Wall. 342, 19 L. Ed. 457; Jones v. Andrews, 10 Wall. 327, 331, 19 L. Ed. 935; Steamship Co. v. Tugman, 106 U. S. 118, 1 Sup. Ct. 58, 27 L. Ed. 87; Bondurant v. Watson, 103 U. S. 281, 26 L. Ed. 447.

There is evidence in this record that within a few months prior to the execution of the contract in suit Leyden paid $5,000 for an agreement that he should receive 20/55 of the issued stock of a corporation whose only property was to be this patent. There was no evidence that the patent became less valuable, and this suit involved one-half of it. "A suit cannot be properly dismissed by a Circuit Court as not substantially involving a controversy within its jurisdiction unless the facts, when made to appear on the record, create a legal certainty of that conclusion." Wetmore v. Rymer, 169 U. S. 115, 128, 18 Sup. Ct. 293, 42 L. Ed. 682. The facts which appear in this record establish no legal certainty that the value of the property in dispute in this suit was less than the jurisdictional amount, but they persuasively indicate that it was more.

The articles of incorporation of the Howe & Owen Ball Bearing Company, which are in the record, prove that it is a corporation organized in November, 1902, under the laws of the state of Maine, that James G. Owen was its president and one of its stockholders, and they recite that his residence was Evansville in the state of Indiana. From these facts the legal presumption arises that Owen was a resident and citizen either of the state of Maine, because he was a stockholder of a corporation of that state, and the presumption is that all who compose a corporation are citizens and residents of the state from

Digitized by Google

which it derived its powers (St. Louis & San Francisco Ry. Co. v. James, 161 U. S. 545, 554, 16 Sup. Ct. 621, 40 L. Ed. 802, and cases there cited), or of the state of Indiana, because he was a resident of that state, and the presumption is that a person is a citizen of the state of his residence, and in either event the citizenship of the parties to this suit was diverse. Facts sufficient to sustain the jurisdiction of the Circuit Court thus appear in the record.

The defendant Howe complains of the decree that it is not sustained by the evidence, and that it is inequitable for many reasons. An accurate knowledge of the parties to the contract, of their relations and of the nature and consideration of the agreement which the decree enforces, will be conducive to a clear understanding and proper appreciation of the various objections to the decree and of their discussion. When this contract was made, Elmo C. Owen owned one half and the defendant A. F. Howe the other half of the patent which is the subject of the agreement and of this suit. Elmo C. Owen was very ill, and about to undergo an operation for appendicitis, from which he subsequently died. James G. Owen, the complainant, was his brother and an attorney at law. The principal parties to the agreement and the only parties who signed the contract were Elmo C. Owen and A. F. Howe. James G. Owen was a party to it so far as his acceptance of the trust imposed upon him by the conveyance of Elmo Owen bound him to discharge his duties as trustee. The terms of the contract were agreed upon between James G. Owen and A. F. Howe while the death of Elmo was imminent, and it was then taken to Elmo C. Owen, who signed it upon the operating table just before the operation. By this contract Elmo conveyed his half interest in the patent to James G. Owen in trust to convey it to the corporation which he was to organize and to vest in Leyden, Wilcox, and James G. Owen 34⅙/250 of his half of the entire stock of the corporation which was to be issued for the patent, and to hold the remainder in trust for his wife and child, in consideration that A. F. Howe would convey his half of the patent to the same corporation and would transfer 34⅙/250 of his half of the stock of the corporation to Leyden, Wilcox, and James G. Owen. In consideration of this conveyance in trust made by Elmo C. Owen, Howe then agreed in writing to make this conveyance and these transfers. The contract thus became an executed agreement on the part of Elmo Owen and an executory one on the part of Howe, and all of Elmo's rights to Howe's performance were vested in James G. Owen, the trustee, for the benefit of Leyden, Wilcox, and the widow and child of Elmo. James G. Owen did not sign the agreement, and he did not thereby undertake or agree to do any acts except those imposed upon him by the trust there created, and these were to organize the corporation, to transfer Elmo's half interest in the patent to it, and to receive, distribute, and hold his half of the stock as specified in the contract. This conveyance and this agreement were made on April 29, 1902. On November 6, 1902, the complainant corporation, with an authorized capital stock of 10,000 shares of $100 each, empowered to buy and sell and otherwise deal in and with patents, of which James G. Owen was a stockholder, a director, and the president, was organized in ac-

Digitized by Google

cordance with the laws of the state of Maine, and on July 24, 1903, Owen notified Howe in writing that this corporation had been organized in pursuance of the agreement; that he was ready as trustee to assign one-half the patent to the corporation; that the latter was ready to issue its stock pursuant to the contract, and he demanded of Howe that he should assign his half of the patent to the corporation, and that he should comply with the terms of the agreement. But Howe declined to do so. We turn now to his objections to the decree that he should perform the contract.

He says that he answered the bill under oath; that his answer is equivalent to one witness; that the contract is an agreement to give an option; that, while there is proof that the corporation is organized and is willing to carry out the agreement, there is no evidence that James G. Owen organized it; that, if he did, there is no evidence that he organized it in performance of the contract; that there is no evidence that he has promoted or will promote the corporation; that the court cannot compel him to promote it, and hence it cannot compel Howe to perform his covenants the consideration of which he insists was the promotion of the corporation by James G. Owen. The rule that an answer under oath, where the oath has not been waived, is equivalent to one witness, and that it may not be overcome except by at least one witness and corroborating circumstances or their equivalent, is conceded; but the objections to the decree rest upon a misconception of the contract. It is more than a mutual agreement whereby the covenants of one party are made the consideration for the covenants of the other. It is an executed trust deed in consideration for which Howe agreed to convey his half of the patent and to transfer 34⅙/250 of the stock he was to receive therefor. By that deed Elmo C. Owen parted with his entire interest in the patent, in consideration that Howe would covenant to make the conveyance and the transfers which he agreed to execute. In consideration of that covenant, Elmo Owen put the title to his half of the patent in a trustee, and thereby put it in the power of Howe, of Leyden, or of his widow or child, to compel the execution of this trust, to secure the removal of the trustee if he failed in any respect to perform his duty, and the appointment by the court of a substitute who would discharge it. In other words, the only thing which went to the whole of the consideration of the covenants of Howe was the executed trust deed of Elmo C. Owen which forms the first part of this agreement. It was in consideration of this deed, which was executed and cannot be revoked or avoided, that Howe made his covenants. The result is that there is nothing optional about the execution of this trust or the performance of this contract. The trustee was required to organize a corporation, to convey to it the half interest in the patent, and to receive, transfer, and hold the stock of the corporation as directed in the conveyance to him, and Howe was required to make the conveyance of his interest in the patent and the transfers of his stock. The consideration of these obligations of the trustee and of Howe alike was the executed trust deed of Elmo C. Owen, and neither of them by a failure to discharge his obligation can release the other. If James G. Owen failed to organize the corporation or to discharge any

Digitized by Google

other duty which his office of trustee imposed upon him, the court, upon the application of any of the cestuis que trust, would appoint a trustee who would execute the trust, and if a corporation was organized, whether by the trustee or by others, which was a fit and willing instrument for the execution of the trust, a court of chancery had ample power, and it was its duty to use it for this purpose and to compel the execution of the trust and the performance of the agreement. The complainant, the Howe & Owen Ball Bearing Company, was such a corporation, and the court has rightfully used it to carry out the trust, whoever inspired its organization.

Moreover, the evidence leaves no doubt that it was created by James G. Owen, the trustee, in pursuance of the trust deed. It is true that no witness so testifies. But the deed imposed upon him the duty of organizing such a corporation. Such a corporation was organized. He is one of the stockholders, one of the directors, and the first president of it, and it joins with him to execute the trust imposed by the deed. Acts frequently speak louder and more truthfully than words. The facts which have been recited are more persuasive than the testimony of a single witness and corroborating circumstances sometimes prove to be, and they convince that this corporation was organized by James G. Owen pursuant to the agreement and in the execution of the trust imposed upon him by the deed it embodies.

A paragraph of the trust deed contains these words:

"From the balance of said capital stock in said trustee's hands he shall retain as his own personal property 21⅔/250 out of said capital stock and said Howe shall transfer a like amount to said James G. Owen in consideration of services rendered and to be rendered in the organization and promotion of said company."

Counsel for Howe contend that he should not be required to perform his agreement, and if he should be compelled to perform any part of it he should not be called upon to convey this 21⅔/250 of his stock to James G. Owen, because the latter has not rendered the services in the promotion of the company which he was to render in the future at the time the agreement was made, and because a court of equity has no power to compel him to render such personal services. But James G. Owen's failure to render these services is no defense to this suit, nor to the demand for the transfer of this stock to him, because the consideration of that transfer was services that had been rendered as well as those that were to be rendered in the organization and promotion of the company, and because he has organized it and has promoted it as far as he can do so before the company secures the patent and issues its stock which the defendant Howe prevents. Conceding, therefore, that James G. Owen made an agreement to render services in the promotion of the company, the rendition of those services was not a condition precedent, but a condition subsequent, to the conveyance of the stock to it, and Howe is estopped from defending his demand for it on the ground that he has not rendered the services, because he is preventing him from doing so by his breach of his agreement.

Digitized by Google

Again, the failure of Owen, the individual, to promote the company, is no defense to the suit by the corporation and Owen, the trustee, for the specific performance of the entire contract by Howe, because the covenant to promote, if it exists, is an individual covenant of Owen which does not go to the whole consideration of the contract, but is subordinate and incidental to, and relates to, less than one-tenth of it. A breach of a covenant which does not go to the whole consideration of the contract, but is subordinate and incidental to its main purpose, does not constitute a breach of the entire contract, does not authorize the injured party to rescind the agreement, but he is still bound to perform his part of it, and his only remedy is a recovery of damages for the breach. Kauffman v. Raeder, 47 C. C. A. 278, 286, 108 Fed. 171, 179, 54 L. R. A. 247. And when a contract has been partially executed, and one of the parties has derived substantial benefits, or has imposed upon the other material losses through the latter's partial performance of the agreement, then the first party cannot rescind the contract on account of the failure of the second party to complete his performance; but the agreement must stand, the first party must perform his part of it, and his only remedy for the failure of the second party to completely perform is compensation in damages for the breach. Kauffman v. Raeder, 47 C. C. A. 278, 284, 108 Fed. 171, 177, 54 L. R. A. 247, and cases there cited. Howe has derived the benefit of a conveyance by Elmo C. Owen of one-half of the patent to a trustee to vest the title in a corporation, and has imposed upon him and his estate the loss of the title to it, in consideration of his agreement to convey his half of the patent to the same corporation and to make the specified transfers of stock, and he cannot now rescind or renounce his contract. He must perform it and seek in damages his remedy for any breaches of incidental or subordinate agreements.

The next objection to the decree is that the contract is so uncertain that a court of equity may not justly decree its performance because it contains no stipulation which specifies the amount of the capital of the corporation to be organized, the amount, if any, of treasury stock it should have, the amount, if any, of stock which James G. Owen should use in its organization and promotion, the price per share at which it should be sold, the amount of capital which should be raised by James G. Owen in its organization and promotion, the state under whose laws it should be organized, whether or not its certificate of incorporation should provide for cumulative voting, and other similar possible or probable corporate attributes or concomitants, and in support of this objection counsel refer to evidence that at the time the contract was made the parties agreed to leave the amount of the capital stock of the corporation for future determination, and that at a subsequent time James G. Owen and Howe agreed that it should be $1,000,000. But neither this testimony nor the presence nor absence of any agreement with reference to the details of a corporate organization here suggested was either material or relevant to any issue in this case. No agreement about any of these corporate attributes or details of organization was either

Digitized by Google

essential or material to a certain and definite contract for the purpose for which this agreement was made. That purpose was to make a trust deed and a contract effective to put the title to the patent in a corporation and to cause the stock of the corporation to be distributed among the parties entitled thereto in the proportions specified in the trust deed. This object was as clearly and definitely evidenced and accomplished by this agreement, which specified the exact proportion of the stock which each party should receive as it could have been if the total amount of the capital stock and all other omitted details suggested had been determined and written down. Whatever the capital stock of the corporation might be, the shares of the respective parties therein were fixed to a legal certainty by this agreement and their rights made definite and judicable. The deed and agreement were complete in themselves, all their essential terms were definite and certain, and their specific performance was enforceable in equity.

Another contention is that the contract was for an option, that it was unilateral, and that James G. Owen was guilty of laches in forming the corporation. But, as has been shown, the contract of Howe was an executory agreement in consideration of the executed trust deed of Elmo C. Owen. It was neither an agreement for an option nor a unilateral contract. James G. Owen, the trustee named in this deed, may lawfully enforce the agreement on behalf of the widow and child of Elmo Owen and the other beneficiaries named therein. On October 10, 1902, Howe notified Owen that he expected him to organize the company within the next 30 days. The certificate of organization of the corporation is dated November 6, 1902. This suit was brought in July, 1903. A suit to enforce the specific performance of a written contract may be maintained at any time within 10 years after default in the courts of Missouri (Rev. St. 1899, § 4272 [Ann. St. 1906, p. 2347]), and the doctrine of laches is generally applied in conformity to the analogous statute for the like action at law. Neither Owen nor the corporation were guilty of any culpable laches in this case.

On February 19, 1902, Elmo C. Owen and the defendant Howe made a written contract with Thomas Leyden that he should advance to them $5,000 to make and test some ball bearing journal boxes; that after the test they would organize a corporation with a capital stock of $250,000; that the patent should be conveyed to this corporation; that its stock of the par value of $95,000 should be placed in its treasury; that its stock of the par value of $20,000 should be issued to Leyden, and its stock of the par value of $135,000 should be issued to Elmo Owen and Howe; and that the corporation should pay to them 10 cents for each ball bearing journal box manufactured. There is testimony in the record to the effect that in the course of the negotiation for this agreement before and at the time it was made there were oral contracts that Leyden should have the same interest in the patent before as after the organization of the corporation, and that he should participate in its organization. But under a familiar rule the written contract must be conclusively presumed to embody the entire agreement of the parties and to

Digitized by Google

express the full extent of their obligations. These parol negotiations and covenants are immaterial and will not be farther noticed. Leyden advanced the $5,000, and counsel for Howe assail the decree on the ground that Leyden had an interest in the patent, and that the decree injuriously affects his rights. No decree may be lawfully rendered in a suit in equity which radically and injuriously affects the rights or interests of an absent party. Shields v. Barrow, 17 How. 130, 138, 141, 15 L. Ed. 158; Cameron v. McRoberts, 3 Wheat. 591, 4 L. Ed. 467; Mallow v. Hinde, 12 Wheat. 197, 6 L. Ed. 599; Kendig v. Dean, 97 U. S. 423, 426, 24 L. Ed. 1061; Northern, etc., R. Co. v. Michigan, etc., R. Co., 15 How. 233, 244–246, 14 L. Ed. 674; Chadbourne v. Coe, 2 C. C. A. 327, 51 Fed. 479; Sioux City, etc., W. Co. v. Trust Co., 27 C. C. A. 73, 82 Fed. 124. But the only right Leyden had here was the right to a specific performance of his contract or to damages for its breach. He is not a party to this suit, and is not bound by this decree, and he will not be, unless he exercises his option to accept the stock adjudged to him thereby. The decree neither deprives him of any remedy nor affects his rights or interests. The corporation to which the title to the patent is to be conveyed and all who receive any of its stock under the decree take with full notice of his contract and of his rights and interests thereunder and subject thereto. He is and will be as free to enforce them against the corporation and its stockholders as he was to urge them against Owen and Howe before this suit was commenced, and he can as easily and efficiently enforce them against the latter as the former.

Nor does the condition of the title to the patent present any obstacle to the decree or to its execution. A court of equity may not adjudge that a defendant who has no title shall convey one. The holder of the title is an indispensable party to a decree for its conveyance. Kennedy v. Hazleton, 128 U. S. 671, 9 Sup. Ct. 202, 32 L. Ed. 576. But Leyden has no title to the patent or to any part of it. The limit of his right is to exercise his option to enforce specific performance of his contract, or to recover damages for its breach, if any. The entire title to the patent is in Howe and James G. Owen as trustee. They are parties to the suit, and the court may require them to transfer this title. Because the entire title to the patent is in the parties to the suit, and because the decree does not radically or injuriously affect any of the rights or interests of Leyden, his contract presents no legal or equitable obstacle to it.

Finally, it is contended that James G. Owen occupied such a confidential relation to his brother Elmo and to Howe that he could not lawfully acquire and hold his rights under the trust deed and contract to a share in the stock of the corporation which he has organized. He was an attorney at law. He had frequently advised Howe and his brother Elmo in relation to their patent and in relation to the formation of a corporation. But this appears to have been friendly advice, and no relation of attorney and client has been proved. The trust deed and contract were dictated by another attorney, agreed upon by Howe and James G. Owen, and written out by the latter. The principle of law which in some cases forbids one from holding property acquired through a fiduciary relation does not denounce or de-

Digitized by Google

stroy all rights and titles thus acquired. It is that one who occupies a fiduciary relation to another in respect to business or property, who by the wrongful use of the knowledge he obtains through that relation, or by the betrayal of the confidence reposed in him under it, acquires a title or interest in the subject-matter of the transaction antagonistic to that of his correlate, thereby charges his title or interest with a constructive trust for the benefit of the latter, which the cestui que trust may enforce or renounce at his option. The test of such a trust or prohibition is the fiduciary relation and a betrayal of the confidence reposed or some breach of duty imposed under it. Steinbeck v. Bon Homme Min. Co., 81 C. C. A. 441, 152 Fed. 333; Boone v. Chiles, 10 Pet. 177, 209, 9 L. Ed. 388. James G. Owen occupied no confidential or fiduciary relation to Howe within the meaning of this principle of the law. He betrayed no confidence reposed in him, and he was guilty of the breach of no duty which he owed to Howe. The latter knew the value of the patent as well as Owen. He understood the terms, the meaning, and the effect of his agreement to transfer to Owen 21⅔/250 of his share of the stock of the corporation just as well as Owen understood it, and he told Elmo that the contract was right and covenanted in writing to perform it. There was no betrayal of confidence or breach of duty here, and the court below rightly enforced the performance of the agreement.

The decree below must be affirmed, and it is so ordered.

(154 Fed. 829.)

HESSIAN v. PATTEN et al.

(Circuit Court of Appeals, Eighth Circuit. July 5, 1907.)

No. 2,503.

1. FRAUDULENT CONVEYANCES—VOLUNTARY DEED.

A voluntary conveyance by an insolvent grantor is fraudulent in itself because it cannot be made without hindering and defrauding his creditors.

[Ed. Note.—For cases in point, see Cent. Dig. vol. 24, Fraudulent Conveyances, §§ 138, 139, 188.]

2. SAME—WHEN VOLUNTARY DEED BY PARENT TO CHILD IS NOT FRAUDULENT.

A voluntary conveyance by a solvent father to his child is not necessarily voidable by his existing creditors, and it is valid against subsequent creditors in the absence of evidence that it was made with intent to defraud them.

If the provision be reasonable, if it leave in the hands of the grantor ample property to pay his existing debts, and if there be no intent to defraud existing or subsequent creditors, it may be sustained.

[Ed. Note.—For cases in point, see Cent. Dig. vol. 24, Fraudulent Conveyances, §§ 141, 144, 145.]

3. SAME—WANT OF CONSIDERATION INSUFFICIENT TO AVOID.

The want of consideration is only a circumstance insufficient in itself to prove a fraudulent intent, but from which and other circumstances such an intent may be inferred.

[Ed. Note.—For cases in point, see Cent. Dig. vol. 24, Fraudulent Conveyances, §§ 186, 189.]

Digitized by Google

4. SAME—DEED FOR USE OF GRANTOR NOT VOIDABLE IF RESERVATION INCIDENTAL AND PARTIAL.

The rule that a conveyance in trust for the use of the person making the same is voidable by creditors of the grantor is inapplicable to a deed which is made primarily and principally for the use of the grantee, and in which the reservation for the grantor is secondary and partial, as in the case of a conveyance by an aged man of a lot and building worth $9,000 and a reservation in the deed of possession of the property during his life.

[Ed. Note.—For cases in point, see Cent. Dig. vol. 24, Fraudulent Conveyances, § 352.]

(Syllabus by the Court.)

Appeal from the District Court of the United States for the District of Minnesota.

Edmund S. Durment and Benjamin Taylor (Albert R. Moore, on the brief), for appellant.

A. R. Pfau, Jr. (A. R. Pfau, Sr., M. J. Severance, and Ora J. Parker, on the brief), for appellees.

Before SANBORN and HOOK, Circuit Judges, and PHILIPS, District Judge.

SANBORN, Circuit Judge. This is an appeal from a decree which dismissed the bill of Thomas Hessian, trustee in bankruptcy of the property of William H. Patten, and of the property of William A. Patten, his son, who were copartners, to avoid a deed of a lot and a store building thereon made by William H. Patten to his daughter, Mrs. Lodusky J. Taylor on February 15, 1902. William H. Patten and William A. Patten were adjudged bankrupts as individuals and as copartners on November 20, 1903. The deed to Mrs. Taylor was recorded on August 3, 1903, within four months prior to the adjudication. Counsel for the appellant contend that this deed was never delivered; that, if it was, the time of its delivery was not before August 3, 1903; that it was a voluntary deed; that it was made with intent to defraud the creditors of the grantor and those who might thereafter become his creditors; and that it was not intended to take effect until the grantor died, so that it was a testamentary disposition, and not a conveyance of the property. If these claims are well founded, the deed must be avoided, and the question is whether or not the evidence sustains them. There is little controversy in the testimony and the issues involve the effect, rather than the existence, of the following facts, which are fairly established by the proof.

William H. Patten had been an upright and successful business man. In 1893 he and his son owned property worth about $63,000, which they invested in the business of their partnership, which subsequently became the business of banking. William H. Patten owned a portion of this partnership property which was worth $33,000, and he also owned a homestead worth about $6,000, the lot and store building here in controversy which were worth about $9,000, and other individual property. He owed nothing, was 66 years of age, and from that time until he died he intrusted the business of the partnership to his son and took no active part in it. He had a

Digitized by Google

wife and three children, his son, Mrs. Taylor and Mrs. Edna N. Budtke. His physical strength was not great, and he was subject to attacks of illness which threatened his death. There was an understanding between the parents and the children that at his death this store building and lot should pass to Mrs. Taylor and the homestead to Mrs. Budtke. In 1896 Mr. Patten was seriously ill, and they thought that his wife would outlive him, and thereupon he caused these two pieces of property to be conveyed to her. But in September, 1900, she died intestate, and the property descended to Mr. Patten and his three children. In the autumn of 1901 the children conveyed their interest in these two tracts of property to their father by a quitclaim deed, which was recorded on December 14, 1901. Mrs. Taylor and Mrs. Budtke made these deeds so that their father could, and with the understanding that he would, convey the store property to the former and the homestead to the latter; but there was no conversation or agreement between them and their father to this effect. In February, 1902, Mr. Patten was again seriously ill at Mrs. Taylor's house and was unable to walk. He called a notary public who drew his will, in which this store property and the homestead were not mentioned, and two deeds; one of the store property to Mrs. Taylor subject to a reservation of the possession thereof during his natural life, and another of the homestead to Mrs. Budtke. He executed these deeds, handed them to Mrs. Taylor, and said, "Here is your deed for the store, and the home for Edna." Mrs. Taylor put them in a desk where Mr. Patten kept his papers and where Mrs. Taylor kept hers, and after he recovered from his illness he took out of this desk and carried away to his home the will and his insurance papers, but left the deeds. Mr. Patten remained in the possession and control of the store property. Two or three months after he made the deeds, he inserted in the deed to Mrs. Taylor without her knowledge a provision that his son should collect the rents from and pay the taxes upon the store property for five years. Mrs. Taylor discovered this interlineation before she recorded her deed, but made no objection. In August, 1903, Mr. Patten was again in failing health. Mrs. Taylor was going away from the city of Le Sueur where they lived. She feared his death and subsequent probate proceedings, and she recorded her deed. The bank which the partnership was operating failed about the middle of October, 1903. About the 20th of that month Mr. Patten furnished a room in the store building, slept there for some months, and claimed the lot and store building as his homestead. In his schedules in bankruptcy, which were verified on November 23, 1903, he specified this property as a part of his individual estate and claimed its exemption as a homestead, and on October 26, 1903, he made a quitclaim deed of it to Mrs. Taylor. Neither Mrs. Taylor nor Mr. Patten ever had any actual intent by the use of his deed of 1902 to hinder, delay, or defraud any of his existing or subsequent creditors. They both believed until after the deeds were recorded in August, 1903, that he had sufficient property aside from the lands conveyed by these deeds to pay all his debts, and neither of them had any notice of any facts which would have led a person of reasonable prudence in their respective situations to

Digitized by Google

discover the contrary. In February, 1902, when the deeds were made, the copartnership and Mr. Patten were solvent. In August, 1903, when this deed was recorded, they were insolvent. There remained unpaid about $1,500 that was owing to those who were creditors of the partnership when the deed was made, and there are subsequent creditors who relied upon the ownership of this property by Mr. Patten in their dealings with the partnership; but there is no evidence that any of them ever received or relied upon any statements that he was the owner, made by Mr. Patten after the date of the deed, February 15, 1902. There is evidence of other facts, but of no others which change the legal effect of those which have been recited. Upon this state of facts the court below dismissed the bill.

The first question which this evidence presents is: Was the deed of February 15, 1902, delivered on that day, and did it convey the property? The claim of this property as his homestead in his schedules in bankruptcy and otherwise in October or November, 1903, his quitclaim deed of it to Mrs. Taylor on October 26th in that year, his interlineation in his deed of February 15, 1902, and the understanding of the father and the children that Mrs. Taylor should have the property at his death, are facts and circumstances indicating that Mr. Patten and Mrs. Taylor did not intend that this property should be conveyed to her in 1902, which have received careful consideration. But the countervailing facts that the actual possession of the deed was given to the grantee on the day of its date by her father with the remark, "Here is your deed for the store," that when he left her home to go to his own after he recovered from his illness, he took his will and his insurance papers which were in the desk with the deed, but left the latter, that the deed ever after February 15, 1902, was in the dominion and possession of the grantee except during the brief time when Mr. Patten made the interlineation without her knowledge, and that he testified that he intended that the deed should take effect on February 15, 1902, outweigh all other evidence and considerations in this case and convince that the deed was delivered on the day of its date, and that the parties to it intended it to evidence, and that it did constitute, a conveyance of this property to Mrs. Taylor on that day, and not a testamentary disposition of it.

Whether the conveyance was voluntary or was made in consideration of the previous deeds from the children to Mr. Patten may be a debatable question, and it is unnecessary to decide it.

A voluntary conveyance by an insolvent grantor is fraudulent in itself, because such a deed cannot be made without hindering and defrauding creditors. Knatvold v. Wilkinson, 83 Minn. 265, 267, 86 N. W. 99; Henry v. Hinman, 25 Minn. 199; McCord v. Knowlton, 79 Minn. 299, 82 N. W. 589; Kehr v. Smith, 20 Wall. 31, 35, 22 L. Ed. 313.

But a voluntary conveyance by a solvent grantor to his child is not necessarily voidable by the grantor's existing creditors, and it is valid against subsequent creditors in the absence of evidence that it was made with intent to defraud them. There is a statute in the state of Minnesota, which relates to this subject, and which reads:

Digitized by Google

"The question of fraudulent intent, in all cases arising under this subdivision, shall be deemed a question of fact, and not of law; and no conveyance or charge shall be adjudged fraudulent as against creditors solely on the ground that it was not founded on a valuable consideration." Rev. Laws Minn. 1905, § 3500.

The want of a consideration is only a circumstance in itself insufficient to prove a fraudulent intent, but from which and other circumstances such an intent may be inferred. If the provision for the child be reasonable, not disproportionate to the means of the grantor, if he retain ample property to pay his existing debts, and if there be no actual intent to hinder or defraud creditors, a conveyance may be sustained, though voluntary. Salmon v. Bennett, 1 Conn. 525, 547–549, 7 Am. Dec. 237; Kehr v. Smith, 20 Wall. 31, 35, 22 L. Ed. 313; Lloyd v. Fulton, 91 U. S. 479, 485, 23 L. Ed. 363; Jones v. Clifton, 101 U. S. 225, 227, 25 L. Ed. 908; Herring v. Richards (D. C.) 3 Fed. 439, 443; Filley v. Register, 4 Minn. 391 (Gil. 296, 300, 309), 77 Am. Dec. 522; Young v. Heermans, 66 N. Y. 374, 381. The evidence in this case is convincing that the conveyance by Mr. Patten to his daughter was not disproportionate to his means, that he retained property sufficient to pay his then existing debts, and that neither he nor his daughter ever had any intent to defraud his creditors.

But counsel argue that the provision in the deed that the grantor should hold the possession of the property during his natural life, and the facts that he retained possession and dominion over it, and that the deed was not recorded until August, 1903, bring it under the ban of the rule of law that a conveyance in trust for the use of the person making the same is void. This rule, however, is inapplicable to conveyances made primarily and principally for the use of the grantee, in which the reservation to the grantor is secondary and partial. Camp v. Thompson, 25 Minn. 175, 180; Curtis v. Leavitt, 15 N. Y. 9, 121, 122. The main purpose and effect of the deed under consideration was to convey the property for the use of the grantee. The reservation of the possession for the use of the grantor was incidental and partial, and it failed to subject the conveyance to the rule here invoked. The retention of the dominion and possession by the grantor was in accord with the express terms of the deed, and the evidence convinces that this deed was not withheld from the record by either the grantor or the grantee with any intent to mislead or deceive the creditors of the former.

A careful consideration of all the evidence in this case has forced our minds to the conclusion that the deed to Mrs. Taylor was neither made nor withheld from the record with the intent either in fact or in law to hinder or defraud the creditors of the grantor, and the decree below is accordingly affirmed.

Digitized by Google

(154 Fed. 834.)

In re THOMLINSON CO. et al.

(Circuit Court of Appeals, Eighth Circuit. May 13, 1907.)

No. 77.

1. BANKRUPTCY—REVISION OF PROCEEDINGS—PETITION—TIME.

Under Act Cong. March 3, 1891, c. 517, § 11, 26 Stat. 829 [U. S. Comp. St. 1901, p. 552], providing that no appeal or writ of error by which any order, judgment, or decree may be reviewed in the Circuit Court of Appeals shall be sued out except within six months after the entry of the order, etc., sought to be reviewed, a petition to revise an order entered in bankruptcy proceedings, denying the bankrupt's motion to quash the service of the subpœna, not filed within six months, is ineffectual.

[Ed. Note.—Appeal and review in bankruptcy cases, see notes to In re Eggert, 43 C. C. A. 9.]

2. SAME—ACTS OF BANKRUPTCY—BILL OF SALE—GENERAL ASSIGNMENT.

A business concern, being in financial difficulties, executed an instrument reciting that, whereas they were indebted to various parties whose claims were due, and that they were unable to pay the same in the regular and ordinary course of business, they thereby sold and set over to M. in trust all their general stock of merchandise, book accounts, and matters receivable, amounting, etc., conditioned that M. would dispose of and sell the same according to his judgment at retail or public sale, and collect all the accounts, and with the proceeds pay pro rata all their creditors, a list of whom was attached, with the amounts due each, and to return any surplus to the grantors on demand. *Held*, that such instrument was not a mortgage, but a general assignment for the benefit of creditors, and therefore constituted an act of bankruptcy.

On Petition for Review.

Edward A. Haid (R. N. McConnell, on the brief), for petitioners.
Fred S. Caldwell, for respondent.

Before SANBORN, HOOK, and ADAMS, Circuit Judges.

ADAMS, Circuit Judge. This is an original petition, filed October 1, 1906, by the bankrupt to revise in matter of law certain proceedings taken by a bankruptcy court in the territory of Oklahoma in the matter of Thomlinson Company, bankrupts. That court on May 26, 1905, denied the bankrupts' motion to quash service of the subpœna, and on May 12, 1906, ruled that a certain instrument executed by the bankrupts was a general assignment for the benefit of creditors, within the meaning of section 3, subd. 4 of the bankruptcy act of 1898, as amended by the act of February 5, 1903, and thereupon made the order of adjudication. To revise these two rulings, deemed by the petitioners to be erroneous, the present proceeding was instituted.

1. The petition to revise was filed more than 16 months after the order was made denying the motion to quash. An order can be challenged by an original petition in this court only when filed within 6 months after it was made. In re Holmes, 73 C. C. A. 491, 142 Fed. 391; Act March 3, 1891, c. 517, § 11, 26 Stat. 829 [U. S. Comp. St. 1901, p. 552]. We therefore cannot consider the merits of the first question submitted to us.

2. The instrument claimed not to be a general assignment is as follows:

Digitized by Google

"Bill of Sale.

"Oklahoma City, Okla., March 25, '05.

"Whereas, the undersigned is indebted to various parties whose claims are now due and payable, and that the undersigned is unable to pay the same in the regular and ordinary course of business, we hereby sell and set over to R. N. McConnell, Oklahoma City, Oklahoma, in trust all of our general stock of merchandise situated at No. 6 West Grand Avenue, said city, with all our book accounts and matters receivable, amounting to about $2,397.14, conditioned that said R. N. McConnell will according to his judgment dispose and sell all of said stock of goods at retail or public sale, and collect all of said accounts, and with the proceeds pay pro rata all of our creditors, a list of which, with their address and respective amounts due, is hereto attached. That said proceeds as fast as realized by said trustee is to be paid over whenever there is sufficient funds to pay 10 per cent. dividend after having first paid whatever necessary expense there may have been incurred under said trust by way of replenishing said stock and conducting said business in the usual retail way. Immediate possession is hereby given to said R. N. McConnell on this day, and he is hereby directed to proceed and dispose of all of said assets, and pay all of said indebtedness so far as the assets will pay, and any surplus, if there be any, returned to the undersigned on demand. [Signed] Thomlinson Company,

"Per A. Thomlinson.

"Witness: L. H. Carr.

"I accept the above and foregoing trust.

[Signed] R. N. McConnell, Trustee."

McConnell took possession of the property conveyed, and proceeded to execute the trust imposed upon him. In our opinion the instrument in question was a general assignment for the benefit of creditors within the true meaning of the bankruptcy act, and was an act of bankruptcy warranting the adjudication. The "general assignment" there contemplated is to be taken in its generic sense, and embraces any conveyance at common law or by statute by which the parties intend to make an absolute and unconditional appropriation of the property conveyed to raise funds to pay the debts of the vendor, share and share alike. Appolos v. Brady, 1 C. C. A. 299, 49 Fed. 401; Bartlet v. Teah (C. C.) 1 Fed. 768; In re Gutwillig, 90 Fed. 475, 34 C. C. A. 377, 92 Fed. 337; In re Sievers (D. C.) 91 Fed. 366; Davis v. Bohle, 34 C. C. A. 372, 92 Fed. 325. Such a conveyance inevitably thwarts operation of the bankruptcy act.

The instrument now under consideration conforms fully to the above definition. It makes an absolute and unconditional conveyance of the debtor's property to a trustee of its own choosing, to be sold to raise a fund for the payment of all its creditors, share and share alike. It is therefore obnoxious to the provisions of the bankruptcy act, which confers the right of administering an insolvent debtor's estate upon a trustee to be chosen by and in the interest of the creditors, and constitutes an act of bankruptcy. Rumsey & Sikemeier Co. v. Novelty & Machine Mfg. Co. (D. C.) 99 Fed. 699.

The general statement made in the last-cited case by the writer of this opinion when district judge, that the conveyance there under consideration contains such a reservation of an equity or such a condition of defeasance as made it a mortgage instead of a general assignment, upon which counsel for petitioners now place some reliance, was, as a general proposition, independent of the facts of that case, ill advised, and cannot be followed.

Digitized by Google

The instrument in question does not contain any of the elements of a mortgage, as insisted upon by bankrupts' counsel. The idea that it was intended as a security for the ultimate payment of the debts of the vendor, or that a reservation of a right to redeem whenever the vendor should pay its debts was intended, is not remotely suggested by any of the terms of the instrument; in other words, there is no right of redemption reserved. The provision at the end of the instrument, requiring a surplus, if any, to be paid to the vendor, cannot be regarded as such reservation. It is nothing more than an expression of what the law implies. If, after all the property had been disposed of, and all the creditors had been fully paid and all the expenses satisfied, any surplus remained, it belonged as a matter of law to the debtor, and no formal statement to that effect can change the legal and obvious import of the instrument from a general assignment for the payment of debts to a provision for their security in the nature of a chattel mortgage.

Having disposed of the last question on its merits in favor of the creditors, a consideration of their motion to dismiss the petition for technical reasons is unnecessary. It will therefore be formally denied, and the petition to revise will be dismissed. It is so ordered.

(154 Fed. 836.)

BOOTH v. UNITED STATES.

(Circuit Court of Appeals, Second Circuit. May 3, 1907.)

No. 230.

1. POST OFFICE—USE OF MAILS TO DEFRAUD—CONSOLIDATION OF INDICTMENTS.
   Rev. St. § 1024 [U. S. Comp. St. 1901, p. 720], authorizes the consolidation for trial of indictments for using the mails to defraud under section 5480 [U. S. Comp. St. 1901, p. 3696], notwithstanding the fact that such indictments charge offenses not committed within the same six months and which could not be joined in one indictment under the latter section, and in the aggregate more than the three offenses which may be so joined.

2. CRIMINAL LAW—PROCEDURE—CONSOLIDATION OF INDICTMENTS.
   The reversal of a judgment of conviction in a criminal case and the remanding of the case for a new trial generally leaves the trial court free to proceed as though the cause had never been tried, and it may consolidate other indictments for trial with those upon which the first trial was had.

   [Ed. Note.—Consolidation of and trial of indictments together, see note to Dolan v. United States, 69 C. C. A. 287.]

In Error to the District Court of the United States for the Western District of New York.

Edward Lynn, for plaintiff in error.
Lyman M. Bass, for defendant in error.

Before WALLACE, LACOMBE, and TOWNSEND, Circuit Judges.

PER CURIAM. The plaintiff in error was convicted of having devised a scheme to defraud by sending communications through the

Digitized by Google

mail, in violation of section 5480 of the Revised Statutes [U. S. Comp. St. 1901, p. 3696], and the assignments of error raise two points:

1. After a conviction and sentence under indictments numbered 315, 316, and 317, which had been consolidated by order of the court below, the judgment was reviewed by this court upon writ of error, and was reversed, and remanded to the court below "for a new trial, and such proceedings as according to right and justice and the laws of the United States ought to be had," and a mandate accordingly was issued to the court below. Subsequent to the filing of this mandate in the court below, a further indictment was found by the grand jury, numbered 366. The latter indictment charged offenses some of which were committed at later dates than those which were the subject of the earlier indictments.

Before the trial the district attorney moved to consolidate the latter indictment with the others. This motion was granted by the court; and against the objection of the defendant, a new trial was had upon all the indictments consolidated, and the defendant was convicted upon all.

We think there was no error in allowing the consolidation of the indictments and the trial upon all the counts. Section 1024 of the Revised Statutes authorizes the consolidation of such indictments, notwithstanding the aggregate offenses are more in number than can be joined in one indictment under section 5480 (In re Henry, 123 U. S. 372, 8 Sup. Ct. 142, 31 L. Ed. 174), and, this being so, it is immaterial that all the offenses charged may not have been committed within the same six months. No more than three, committed within the same six months, can be joined in one indictment, and this is the only respect in which section 5480 infringes upon the ordinary procedure or pleading in criminal cases.

The terms of the mandate did not restrict the power of the court below to the trial of the original issues. They left the court free to proceed as though the cause had never been tried.

2. We have examined the record with care to ascertain whether the evidence, admitted against the defendant's objections, concerning offenses other than those charged in the indictments, related to such as were sufficiently similar in character, and sufficiently related in time to be material as bearing upon the quo animo or fraudulent intention of the defendant in the transactions which were charged as offenses in the indictment, and are satisfied that it was admissible.

The judgment is affirmed.

Digitized by Google

(153 Fed. 532.)

CITY OF GRAND FORKS v. ALLMAN.

(Circuit Court of Appeals, Eighth Circuit. April 22, 1907.)

No. 2,465.

1. MUNICIPAL CORPORATIONS—ACTIONS AGAINST FOR PERSONAL INJURY—CONDITIONS PRECEDENT.

Under Rev. Code N. D. 1899, § 2172, which requires as a condition precedent to the maintaining of an action against a city for a personal injury that a verified claim setting forth the time, place, cause, and extent of the injury shall be presented to the mayor and common council for audit and allowance within sixty days after the happening of the injury, a claim is duly presented where it is presented to and filed by the city auditor within the specified time.[1]

2. SAME—OBSTRUCTION IN STREETS—DUTY TO REMOVE.

It is the duty of a city whenever a dangerous obstruction appears in its streets, even though it was unauthorized, to use reasonable diligence to remove it, and what constitutes such diligence depends on the facts in each case, and especially upon the fact whether the existence and dangerous character of the obstruction was known, or in the exercise of reasonable supervision and diligence could have been known by the city in time to have caused its removal before it produced the injury complained of.

[Ed. Note.—For cases in point, see Cent. Dig. vol. 36, Municipal Corporations, §§ 1612–1615.]

3. SAME—ACTION FOR PERSONAL INJURY—QUESTION OF NEGLIGENCE.

In an action against a city to recover for a personal injury, it was shown that, when walking at night on one of the most frequently used streets of the city, plaintiff fell over a loose plank and was injured, that some time before a water pipe had been temporarily laid in the street upon the pavement and covered to prevent freezing, and that the plank in question had been placed on the covering to keep it in place. Although it was not so placed by authority of the city, it had been there for a week or more prior to the injury. *Held*, that under such evidence the question of the city's negligence was properly submitted to the jury.

[Ed. Note.—For cases in point, see Cent. Dig. vol. 36, Municipal Corporations, §§ 1745–1752.]

4. TRIAL—VERDICT—CONSISTENCY WITH SPECIAL FINDINGS.

A general verdict for the plaintiff in an action against a city to recover for an injury received by plaintiff by falling over an obstruction in a street, returned under instructions which authorized such verdict if the jury should find that the obstruction had been there for such length of time that the city in the exercise of reasonable care should have known of it, is not inconsistent with the answer to a special interrogatory stating that the jury were unable to find the length of time the obstruction had been there, where the evidence tended to show that it had been there for a number of days, but left the exact length of time uncertain.

In Error to the Circuit Court of the United States for the District of North Dakota.

Scott Rex, for plaintiff in error.

C. J. Murphy and Fred S. Duggan, for defendant in error.

Before SANBORN, HOOK, and ADAMS, Circuit Judges.

ADAMS, Circuit Judge. Allman, the plaintiff below, brought this suit against the city of Grand Forks to recover damages for injuries sustained by him by falling over an obstruction in one of the public

[1] See note at end of case.

Digitized by Google

streets of the city. He recovered a judgment in the Circuit Court, and the city on this writ of error challenges it in argument and brief for three reasons: (1) Because there was no preliminary presentation of the claim for damages given to the city as required by section 2172 of the Revised Code of North Dakota of 1899; (2) because there was no substantial proof of negligence on the part of the city; (3) because the verdict was in disharmony with the special findings made by the jury.

Was there a proper preliminary presentation of the claim?

Section 2172 of the Code requires as a condition precedent to maintaining a suit of this kind against the city that the claim "shall within sixty days after the happening of such injury or damage, be presented to the mayor and common council of such city by a writing signed by the claimant and properly verified, describing the time, place, cause and extent of the damage or injury." On February 6, 1905, within 60 days after the injury, which occurred on December 17, 1904, plaintiff presented to the city auditor a claim for damages corresponding to the requirements of section 2172, supra, and the same was filed by the auditor. A regular meeting of the council was to be held that evening, but for want of a quorum it was not held until February 16th, when the auditor advised the council of the filing of the claim and was instructed to return it to plaintiff with the information that, when presented according to the requirement of the statutes, it would be considered.

A brief reference to the statutes and decisions of North Dakota will serve to show that the filing of the claim with the auditor was a presentation of it to the mayor and council within the meaning of the law. The mayor and common council of each city is constituted a board of audit of such city. Section 2171, Rev. Code 1899. The city council consists of the mayor and aldermen. Section 2172, Rev. Code, 1899. Only one writing signed by the plaintiff and properly verified is contemplated by section 2172, supra. When so executed and verified, it is to be presented to the mayor and council "for audit and allowance." Section 2174. Giving due consideration to these provisions of the statutes considered collectively, we cannot agree with counsel for the city that the claim should have been presented to the mayor separately from the council. The claim manifestly should be so presented to the body authorized to audit it as to secure the attention of that body, and, when that is done, it would seem that the requirement of the statutes has been complied with. It was therefore properly presented to the mayor and common council sitting together as a board of audit. The mayor constituting one member of the council and one member of the board of audit was, to all intents and purposes, presented with the claim when it was presented to the council.

There obviously must be some way of presenting a claim which the city cannot, by its own action, thwart or prevent. If it could only be presented to the council when in session, that body, as illustrated in this case, might fail to meet during the period within which the claim was required to be presented, and thus by its own wrong work a defeat of a meritorious claim. It was sought to be presented

Digitized by Google

on February 6th, when a regular meeting of the council should have been held, but which, without any fault of the complainant, was postponed until after the statutory time for presenting the claim had elapsed. The city auditor is by law required to keep his office at the place of meeting of the council or elsewhere as directed by the council; to keep a record of the proceedings of the council; to be the custodian of the corporate seal and of all papers and records of the council; and to audit and adjust all claims and demands against the city before they shall be allowed by the council. Sections 2168, 2170, Rev. Code, 1899. It appears from these provisions and from the obvious necessity of providing an effective way of presenting a claim to the final auditing board that the auditor is clearly intended to be the medium of approach to the council, and that, when a claim is presented to and filed with him for audit and adjustment, it is presented to the council; and this, we understand, has been so held in the recent case of Pyke v. City of Jamestown, decided by the Supreme Court of North Dakota, February 15, 1906, and reported in 107 N. W. 359, wherein, after referring to the legislation just pointed out, it is said:

> "The auditor is the proper official channel through which all claims for damages reach the city council and is the official representative of the city council for receiving all claims and demands against the city, including claims for personal injuries."

In the last-mentioned case a large number of authorities are cited, and the conclusion there reached forcibly commends itself to our approval.

Was there sufficient evidence of negligence to justify the jury's finding to that effect?

The streets of a city are made and maintained at public expense for the use of its citizens and others who may lawfully pass over them, and a duty is cast upon a city to exercise all reasonable supervision, care, and precaution to maintain them in a reasonably safe condition so as to avoid, as far as possible, injury to the traveling public. This general rule necessarily implies a minor one that the city must, whenever even an unauthorized, dangerous obstruction appears on its streets, use reasonable diligence to remove it. This duty is imposed upon defendant city by statute (section 2148, Rev. Code 1899, subd. 10), as well as on general principles of law. Barnes v. District of Columbia, 91 U. S. 540, 23 L. Ed. 440; District of Columbia v. Woodbury, 136 U. S. 450, 10 Sup. Ct. 990, 34 L. Ed. 472. What is such diligence depends upon the facts of each case, and particularly upon the fact whether the existence and dangerous character of an obstruction has been known, or in the exercise of reasonable supervision and diligence could have been known, by the city long enough to enable it to remove it or cause it to be removed before an accident happens.

The foregoing propositions of law are not disputed by either side, and were in substance and effect given by the learned trial judge to the jury in this case. What are the facts? Plaintiff on the evening of December 17, 1905, when dark, was walking with two friends from East Grand Forks to Grand Forks. He had just crossed the bridge connecting the two places, and was walking from the west

Digitized by Google

end of the bridge sidewalk across a corner of the public street to the main sidewalk, which did not align with the bridge sidewalk. Pedestrians customarily walked there in traveling between the two places. As plaintiff was making this crossing he fell over a loose plank which had been placed over an iron water pipe lying temporarily for a short distance on the surface of the paved street while the regular water pipe was undergoing repair. On November 24th, three weeks before the accident, the iron pipe was laid across the street and two planks, one on either side of it, were spiked down to the street to hold the pipe steady and to permit traffic over it without injuring it. Some time thereafter manure was placed over the pipe to keep it from freezing, and it was claimed by the plaintiff that the loose plank was placed there to hold the manure down. This was vigorously denied by the city. In the argument before us it seems to have been assumed as a fact that the city did not originally authorize the placing of the loose plank over the pipe line, and counsel for plaintiff concede for argument's sake that on the evidence adduced the assumption was warranted. Notwithstanding that concession, it is an indisputable fact that the plank was there on the evening in question, that it was a dangerous obstruction to the street, and that plaintiff fell over it and was injured.

The plank was there at the time of and immediately before the accident serving a purpose which reasonably implied some permanency. The city introduced several witnesses who, after showing that it was more or less probable that they would have noticed the plank if it had been there any length of time, testified that they had not seen it before the accident. Other witnesses called by plaintiff testified to the contrary. The sheriff of the county testified that he had noticed it lying there three or four days before the accident; that when he saw it it was lying somewhat crosswise of the pipe, but that he straightened it out so as to cover the pipe, remarking at the time that "somebody is going to fall down here and get hurt." Another witness testified that it had been there a week or 10 days before the accident.

Without further specification, it is sufficient to say that there was evidence from which the jury might have found that the loose plank in question had been there for at least a week before the injury.

If, now, the city in the exercise of reasonable care ought to have known of the obstruction within that time, its duty was to remove it or take the consequences. We think there was ample evidence to warrant the finding which the jury made on that issue in favor of the plaintiff. The city had many duties, which appropriately required daily supervision and inspection of its most frequented streets, imposed upon it by law. Section 2148, Rev. Code 1899. Among them was to light and clean streets and prevent and remove obstructions therefrom. The obstruction in question was on a street very frequently traveled, forming a connecting link between two important localities. It had been there several days and its dangerous condition had been the subject of comment by one of the most important officers of the county. It is difficult in cases of this kind to lay down definite rules for the determination of the issue of reasonable care. What

Digitized by Google

would import knowledge of an obstruction in one locality would necessarily be different from what would do it in another. The obligation of care and inspection is more imperative where the street is much used than where it is little used, and reasonable care might be different for each place. Considerations like these make the issue in question peculiarly appropriate for a jury. For some illustrative cases where the existence of an obstruction for a short period of time has been held sufficient to charge defendant with constructive knowledge of it reference may be made to Carrington v. City of St. Louis, 89 Mo. 208, 1 S. W. 240, 58 Am. Rep. 108; Straub v. City of St. Louis, 175 Mo. 413, 75 S. W. 100; Mayor v. Johnson, 84 Ga. 279, 10 S. E. 719; Larson v. Grand Forks, 3 Dak. 307, 19 N. W. 414. In the last-mentioned case it is said:

"Whether the corporation had notice or was negligently ignorant is a question of fact for the jury. Notice will be inferred if the defect in the street or sidewalk has existed for a considerable length of time or from the fact that the defect had existed so long as to render it notorious."

See, also, to the same effect, Thompson on Negligence, 761.

Was the general verdict inconsistent with the special findings?

The Code of North Dakota empowers the courts of that state to require the jury to make special findings of fact, and provides that, if they are inconsistent with the general verdict as found, a judgment as required by the special verdict shall be entered. The court below pursued that practice and submitted to the jury the following questions, to which answers were made as stated after each question:

"(1) How many planks were used in the structure in question when it was put down on November 24, 1904? Ans. Two.

"(2) Were such planks spiked down to the pavement? Ans. Yes.

"(3) Was the plank which tripped the plaintiff one that was laid November 24, 1904, or one that was subsequently laid? Ans. Subsequently laid.

"(4) If you find in answer to question 3 that the plank which tripped plaintiff was placed subsequent to November 24, 1904, for what time previous to the accident had it been continuously at the point of the accident? Ans. We don't know."

The contention is that the finding that the jury did not know how long the plank which tripped plaintiff had been located there is inconsistent with the general finding under the court's charge to the effect that it had been there continuously for such a time that the city in the exercise of reasonable care should have discovered it. We fail to discover any inconsistency in this. The jury under the evidence gave a very proper answer to the last question propounded to them. The proof rendered an accurate answer difficult. The witnesses placed the time variously from four to ten days. It does not follow that the jury could not properly find that the plank had been there long enough to charge the city with knowledge of its existence merely because it was unable to definitely and accurately tell the number of days it had been there.

There is an assignment of error predicated on the court's refusal to instruct a verdict for defendant based on the grounds that there was no proof of defendant's negligence, but was proof of plaintiff's contributory negligence. Proof tending to show defendant's negligence has already been considered, and it is sufficient to say that in

Digitized by Google

our opinion the issue of contributory negligence was properly left to the jury, and its finding thereon is conclusive. The case was tried below with great fairness and impartiality, which specially characterized the charge to the jury, and we find no reason to attribute the result to either prejudice or sympathy, as suggested by defendant's counsel.

The judgment should be affirmed.

NOTE.

Sufficiency of Presentation, Service, or Filing of Claims for Personal Injuries, or Notice Thereof, as Condition Precedent to Actions Against Municipal Corporations.

I. In General.

[a] (Mass. 1880) The notice required by St. 1877, c. 234, §§ 3, 4, before bringing an action for an injury occasioned by a defect in a highway, may be given by the person injured or by any other person in his behalf.—Mitchell v. City of Worcester, 129 Mass. 525.

[b] (Minn. 1901) Notice of claim of damages against an incorporated village for injuries caused by a defective sidewalk, required by Laws 1897, c. 248, when served on the village recorder, as custodian of the records of the council, must be served on him at his office or place of transacting the official business pertaining to his office.—Peterson v. Village of Cokato, 84 Minn. 205, 87 N. W. 615.

[c] (N. Y. 1904) Under Laws 1886, p. 801, c. 572, providing that the plaintiff in an action against a city for personal injuries shall file notice of claim with the comptroller, and a notice of intention to sue with the corporation counsel, a notice must be filed as to each claim, and hence a parent, in an action for injury to his infant son, cannot rely on the notice filed on behalf of the son. —Seliger v. City of New York, 88 N. Y. Supp. 1003.

[d] (N. Y. 1906) Under Laws 1898, p. 438, c. 182, § 461, relating to charters for cities of the second class, and requiring written notice of an accident alleged to have resulted from the negligence of a city to be served on the common council within three months of the accident, describing the time, place, cause, etc., of the injuries, where a fatal accident occurred August 1st, letters testamentary being issued October 19th, a notice served by decedent's administratrix on the president of the common council October 22d, and delivered by such president to the council at its first meeting was a sufficient compliance with the statute, though there was no meeting of the council between October 1st, and November 5th, at which time the notice was delivered.—Blount v. City of Troy, 110 App. Div. 609, 97 N. Y. Supp. 182.

[e] (N. Y. 1906) A city charter (Laws 1897, p. 432, c. 360, § 33) provides that no action shall be maintained against the city for personal injuries unless notice of claim shall have been filed within one month after such injuries shall have been received. The statutory construction law (Laws 1892, p. 1490, c. 677, § 26) provides that the number of months after a certain day shall be computed by counting such number of months from such day, exclusive of the calendar month in which such day occurs, and shall include the day of the month in the last month so counted having the same numerical order in days of the month as the day from which the computation is made. Section 27 of the same law provides that, in computing any specific number of days, weeks, or months from a specified event, the day upon which the event happens is deemed the day from which the reckoning is made. *Held* that, where a person was injured February 10th, a notice filed on March 11th was one day too late. Order (1904) 100 App. Div. 25, 90 N. Y. Supp. 858, affirmed.—Biggs v. City of Geneva, 184 N. Y. 580, 77 N. E. 1182.

[f] (N. Y. 1906) Where plaintiff was rendered mentally incompetent by an injury sustained by defect in one of defendant's streets, and he served notice of his injuries within three months after his mental incapacity was removed, the notice was served in time, within Oswego City Charter, § 345, requiring

Digitized by Google

notice of claim within three months after the injury.—Forsyth v. City of Oswego, 114 App. Div. 616, 99 N. Y. Supp. 1022.

[g] (Wis. 1899) Rev. St. 1878, § 1339, providing that notice in writing of an injury by defects in a highway shall be "given to the town supervisor," is sufficiently complied with where the notice is sent by mail to and received by the supervisor.—Small v. Town of Prentice, 102 Wis. 256, 78 N. W. 415.

II. COPIES OR ORAL STATEMENTS.

[a] (Mass. 1881) Statements of the time, place, and cause of an injury due to a defect in a street, made to a police officer by a friend who witnessed the accident and was requested by the injured party to notify the police, without disclosing that he was acting for the injured party, or mentioning damages or his reasons for making the statements, is not a sufficient notice to the city, under St. 1877, c. 234, §§ 3, 4.—McNulty v. City of Cambridge, 130 Mass. 275.

[b] (Mass. 1881) Statements of the time, place, and cause of an injury due to a defective street, and that the party injured intended to sue the city, made by him to a police officer during a friendly call of the latter, is insufficient notice to the city, under St. 1877, c. 234, notwithstanding the injured party and a third person, who was also present, may have understood that he was addressing the officer in his official capacity.—Miles v. City of Lynn, 130 Mass. 398.

[c] (Mass. 1881) Information of the time, place, and cause of an injury from a defective street, given by the injured party to a police officer who had called upon him, without informing the officer that he intended such information as the statutory notice to the city, is not a compliance with St. 1877, c. 234, although the injured party supposed the officer had called officially to learn the circumstances of the accident, and he in fact reported the information received by him at the police station on the same day.—Mooney v. City of Salem, 130 Mass. 402.

[d] (Mass. 1881) A notice given in a casual conversation with a police officer of the city by the attending physician of the injured person, but not at his request nor on his behalf, is not sufficient under St. 1877, c. 234.—Roach v. City of Somerville, 131 Mass. 189.

[e] (Mass. 1890) The notice required by Pub. St. c. 52, §§ 19, 21, to be given by a person injured in his person or property by a defect in a highway, may, under Pub. St. c. 27, § 117, be served by an officer upon the city or town by an attested copy.—Whitney v. City of Lowell, 151 Mass. 212, 24 N. E. 47.

[f] (Minn. 1899) Notice of injury is properly given, and the claim is properly presented, by delivering a copy or copies of the original written notice and claim to compensation.—Kelly v. City of Minneapolis, 77 Minn. 76, 79 N. W. 653.

[g] (Minn. 1902) A notice to a village of an injury received on a sidewalk, before action commenced, was given to the recorder of the village. The notice was in proper form, but was a carbon copy; but there was a reasonable identification of the copy, and there was no claim that the village did not have knowledge of the injury through such notice. *Held*, that the notice was sufficient.—Ljungberg v. Village of North Mankato, 87 Minn. 484, 92 N. W. 401.

[h] (N. Y.) Under a charter requiring that all claims against the city for injuries shall be presented to the comptroller, duly verified, it is sufficient, in the absence of objection, if the original claim, signed and verified, is shown to the comptroller, and a copy left with him.—(1888) Magee v. City of Troy, 48 Hun, 383, 1 N. Y. Supp. 24, judgment affirmed (1890) 119 N. Y. 640, 23 N. E. 1148; (1891) McDonald v Same, 59 Hun, 618, 13 N. Y. Supp. 385.

[i] (N. Y. 1901) Auburn City Charter, § 140, provides that no action shall be maintained against such city for any personal injury resulting from a defective sidewalk unless a written notice of the injury, with notice of an intent to sue the city therefor, shall be filed in the city clerk's office within 60 days after such injury, is not complied with by merely saying to the clerk at the time of filing notice of injury that it is the party's intention to bring suit.—De Vore v. City of Auburn, 64 App. Div. 84, 71 N. Y. Supp. 747.

[j] (N. Y. 1907) Under section 322 of the village law (Laws 1897, p. 453, c. 414) an action for personal injuries cannot be maintained against the village, unless a verified statement of the nature of the claim and of the time and

Digitized by Google

place at which such injuries were received is filed with the village clerk within six months after the cause of action accrued. Plaintiff's lawyers made out the statement, and plaintiff verified it; but the lawyer, instead of filing the original statement, filed a carbon copy thereof, which was received without objection by the clerk. *Held* that, the original statement having been produced on the trial and the village not being misled, there was a substantial compliance with the statute.—Scheer v. Village of Perry, 103 N. Y. Supp. 1048.

III. To Council or Other Governing Body, or Members or Representatives Thereof.

[a] (Colo. 1895) Handing a notice to an alderman is not service on the city council, within a provision of the city charter requiring the giving of written notice to the mayor or city council before the city can be made liable for an injury received on its streets.—City of Denver v. Saulcey, 5 Colo. App. 420, 38 Pac. 1098.

[b] (Mass. 1887) Under Pub. St. c. 52, § 21, which requires the service of a notice by a person claiming compensation for injuries caused by a defect in a highway on "the mayor, the city clerk, or the treasurer," a notice handed by the person injured to an alderman, who caused it to be acted upon by the board of aldermen, after which it was delivered to the city clerk in the regular course of the business of the board, is sufficiently served.—Wormwood v. City of Waltham, 144 Mass. 184, 10 N. E. 800.

[c] (Minn. 1888) Where notice of a claim for injuries sustained from defects in a street, etc., has been served on the mayor or recorder, as required by section 18, c. 7, of the charter of the city of Austin, the claim need not be presented to the common council under section 14, c. 11, providing that all claims against the city shall be so presented.—Clark v. City of Austin, 38 Minn. 487, 38 N. W. 615.

[d] (Minn. 1893) Sp. Laws 1885, c. 7, § 19, requiring notice of injuries received from defective streets to be served on the mayor or city clerk within 30 days after the injury, is complied with by service of notice on the city clerk and its presentation to the council within proper time, although the notice is addressed to the mayor and city council.—Johnson v. City of St. Paul, 52 Minn. 364, 54 N. W. 735.

[e] (Minn. 1898) Laws 1897, c. 248, requiring notice to cities or villages of any injury for which damages are required as a condition precedent to liability, is not satisfied by notice given to the mayor. It must be given to the council or other governing body of the municipality.—Doyle v. City of Duluth, 74 Minn. 157, 76 N. W. 1029.

[f] (Minn. 1899) Where the notice of an injury from a defective sidewalk is presented to, and left with, the clerk having charge of the records and files of the council, at a meeting thereof, and is by him then presented and read to the council, the notice is properly served on, and presented to, the council.—Lyons v. City of Red Wing, 76 Minn. 20, 78 N. W. 868.

[g] (Minn. 1899) Under Laws 1897, c. 248, requiring notice to be given to the common council or other governing body of a municipality as a condition precedent to the bringing of an action against it for injuries sustained by its negligence, a notice directed to such council, and delivered, for filing, to the recorder or other officer having the custody of the records and files of the council, within the time limited by the statute is sufficient.—Roberts v. Village of St. James, 76 Minn. 456, 79 N. W. 519.

[h] (Minn. 1899) Laws 1897, c. 248, § 1, providing that notice of an injury shall be given and the claim presented to the council or other governing body of the municipality within 30 days after the injury, is complied with, where the governing body is not in session at the time of service, by directing the notice to the council or other governing body, and then delivering it to the officer having the care and custody of the records and files of such body, within the time fixed by statute.—Kelly v. City of Minneapolis, 77 Minn. 76, 79 N. W. 653.

[i] (Minn. 1901) Where notice of a claim for injuries caused by a defective sidewalk is properly served on the recorder, as custodian of the records of the village council, it is immaterial, in so far as the right of recovery against the

Digitized by Google

municipality is concerned, whether the recorder presented the same to the village council for their action or not.—Peterson v. Village of Cokato, 84 Minn. 205, 87 N. W. 615.

[j] (Minn. 1903) Where a traveler is injured by an obstruction placed in a street by the park board of a city, notice is properly given to the city, and not to the park board, under Laws 1897, p. 459, c. 248, requiring that notice shall be given to the city council or other governing body of the city.—Kleopfert v. City of Minneapolis, 90 Minn. 158, 95 N. W. 908.

[k] (N. Y. 1903) Under Laws 1892, p. 1489, c. 677, § 20, providing that when a notice is required to be given to a board or body, service on the clerk or chairman shall be sufficient, service on the president of the common council of notice of a claim against a city for injuries is a sufficient compliance with a statute requiring such notice to be served on the common council.—McIntee v. City of Middletown, 80 App. Div. 434, 81 N. Y. Supp. 124.

[l] (N. Y. 1905) Oneida Village Charter, Laws 1894, p. 1564, c. 620, tit. 10, § 33, provides that all claims against the village for defective streets must be presented to the board of trustees within 60 days after the happening of the injury. Title 4, § 4, p. 1520, requires the village clerk to act as clerk of the board, and to keep a book in which to enter the date, time, and manner of service of notices. Statutory Construction Law, Laws 1892, p. 1489, c. 677, § 20, provides that, when a notice is required to be given to a board, service on the clerk thereof shall be sufficient. *Held*, that service on the clerk of a claim for injuries from a defective street was sufficient, though not made at a meeting of the board, and though he failed to present the claim to the board.—Dobson v. Village of Oneida, 106 App. Div. 377, 94 N. Y. Supp. 958.

[m] (N. D. 1906) Plaintiff delivered her verified claim for damages for personal injuries to the mayor at his office. A copy was delivered to the auditor outside of his office accompanied by a statement of what the paper was and a request that it be presented at the next meeting of the council. *Held*, that the claim was presented to the mayor and council within the meaning of Rev. Codes 1899, §§ 2172, 2173, providing for such presentation.—Pyke v. City of Jamestown, 107 N. W. 359.

[n] (N. D. 1906) The city auditor is an official representative of the city council for the purpose of receiving claims against the city, including claims for personal injuries to be presented to the council under Rev. Codes 1899, § 2172.—Pyke v. City of Jamestown, 107 N. W. 359.

[o] (Tex. 1897) The notice required to be given as a condition precedent to an action against a city for personal injuries must be given to the "city council," as prescribed by the charter; notice to the city secretary being insufficient.—City of Ft. Worth v. Shero (Tex. Civ. App.) 41 S. W. 704.

[p] (Wash. 1902) Where a city charter requires that one claiming to have been injured, owing to the city's negligence, shall file a claim with the city council, a presentment to the city clerk is sufficient.—Durham v. City of Spokane, 27 Wash. 615, 68 Pac. 383.

[q] (Wis. 1899) A claimant for personal injuries against a city sufficiently presents his claim to the city council by filing it with the city clerk for presentation to the council, within Laws 1889, c. 197, § 139, prohibiting the maintenance of an action of tort against a city without presentment of the claim to the council.—Bacon v. City of Antigo, 103 Wis. 10, 79 N. W. 31.

IV. To Officers or Other Representatives.

[a] (Mass. 1883) A notice to a city that a person has been injured by a defect in a highway, if delivered, in the city clerk's office, to the assistant clerk, in the absence of the clerk, is duly served on the city.—McCabe v. City of Cambridge, 134 Mass. 484.

[b] (Minn. 1899) The notice of injury required to be given to the mayor or city clerk, under the Minneapolis charter (Sp. Laws 1881, c. 76, subc. 8, § 20), before an action can be maintained on account of such injury, can be given and served on the assistant city clerk.—Kelly v. City of Minneapolis, 77 Minn. 76, 79 N. W. 653.

[c] (N. Y. 1888) Laws 1886, c. 572, providing that no action against a city having 50,000 inhabitants or over for damages for personal injuries caused by

Digitized by Google

negligence of the city shall be maintained, unless notice of intention to commence the action shall have been filed with the counsel of the corporation within six months after the cause of action accrued, applies to New York City, though Consolidation Act, § 1104, provides for giving notice to the comptroller, and notice of such claim must be given to both the comptroller and corporation counsel.—Frankel v. City of New York (Sup.) 2 N. Y. Supp. 294.

[d] (N. Y. 1890) Laws 1886, c. 572, provides that no action against any city having a population of over 50,000, for personal injury sustained through its negligence, shall be maintained, unless commenced within one year after cause of action accrued, nor unless notice of the intention to commence such action, and of the time and place at which the injuries were received, shall be filed with the counsel to the corporation within six months after the cause of action shall have accrued. *Held* not complied with by the filing of a claim with the comptroller of the city, under the consolidation act, and the forwarding of the same to the corporation counsel, and an examination thereafter of the claimant by the latter officer within six months after the cause of action accrued.—Babcock v. City of New York, 56 Hun, 196, 9 N. Y. Supp. 368.

[e] (N. Y. 1892) Laws 1886, c. 572, § 1, provides that no action against any city in this state having 50,000 inhabitants or over for personal injuries shall be maintained unless brought within one year after the cause of action accrues, nor unless notice of intention to bring the action is filed with the counsel to the corporation or other proper law officer within six months after such time. The charter of the city of Buffalo (Laws 1870, tit. 3, c. 519, § 7, as amended by Laws 1886, c. 479, § 8) provides that no such action shall be brought till 40 days after the claim therefor has been presented to the common council for audit. *Held*, that such action cannot be maintained against the city of Buffalo without compliance with the provisions of the first-named statute; and compliance with the provisions of the charter of such city by presenting the claim for injuries to the common council within the proper time is not a substantial compliance with the requirements of the statute relating to notice to the counsel to the corporation.—Curry v. City of Buffalo, 135 N. Y. 366, 32 N. E. 80, affirming (1800) 57 Hun, 25, 10 N. Y. Supp. 392.

[f] (N. Y. 1896) Notice of intention to sue a city for personal injuries, required by Laws 1886, c. 572, § 1, to be filed with the city counsel, is sufficiently filed by being delivered in his office to one who is acting for an assistant in making the examination of the plaintiff regarding the same claim.—McMahon v. City of New York, 1 App. Div. 321, 37 N. Y. Supp. 289.

[g] (N. Y. 1898) Laws 1886, c. 572, § 1, requiring the filing with the corporation counsel of a notice of intent to sue a city for personal injuries as a condition precedent to the right to sue the city for such injuries, is not complied with by service of a notice on the comptroller of the city, pursuant to Laws 1882, c. 410, § 1104, requiring a similar notice to be served on him. Judgment (Sup. 1896) 18 Misc. Rep. 303, 41 N. Y. Supp. 1077, affirmed.—Kennedy v. City of New York, 34 App. Div. 311, 54 N. Y. Supp. 261.

[h] (N. Y. 1899) Laws 1886, c. 572, § 1, requiring notice of intent to sue a city for personal injuries to be filed with the corporation counsel, was substantially complied with where the paper was addressed to, and served on, the city comptroller, who sent it to the corporation counsel, who filed it in his office, and acted on it by examining plaintiffs on the notice given them by defendant to appear. Judgment and order (1897) 17 App. Div. 536, 45 N. Y. Supp. 592, reversed.—Missano v. City of New York, 160 N. Y. 123, 54 N. E. 744.

[i] (N. D. 1898) Pol. Code, c. 28, art. 7, §§ 2171–2174, regulating the presentation of claims for injuries caused by defective sidewalks to the board of audit of the municipality, do not prescribe the manner of their presentation nor the particular channel through which the claims are to be presented. *Held*, that a claim filed with the auditor, and presented by him to the mayor and council, within the statutory period, was sufficient.—Coleman v. City of Fargo, 8 N. D. 69, 76 N. W. 1051.

[j] (N. D. 1906) Plaintiff delivered her verified claim for damages for personal injuries to the mayor at his office. A copy was delivered to the auditor outside of his office, accompanied by a statement of what the paper was and a request that it be presented at the next meeting of the council. *Held*, that

Digitized by Google

the claim was presented to the mayor and council, within the meaning of Rev. Codes 1899, §§ 2172, 2173, providing for such presentation.—Pyke v. City of Jamestown, 107 N. W. 359.

[k] (Wis. 1884) Under Rev. St. 1878, § 1339, making it a condition precedent to the right to maintain an action against a city for injuries by reason of a defective highway that notice thereof, with particulars, be given the mayor or city clerk within a certain time, a complaint failing to state such notice is fatally defective; and an averment that the claim was presented to the city council does not show a sufficient notice and compliance with the statute.—Dorsey v. City of Racine, 60 Wis. 292, 18 N. W. 928.

[l] (Wis. 1899) Under the charter of Fond du Lac (Laws 1889, c. 435, § 4), requiring service of notice of an injury caused by a defective sidewalk upon the street commissioner or sidewalk superintendent or alderman of the ward where the injury occurred, service upon the mayor and city clerk is not sufficient.—Harris v. City of Fond du Lac, 104 Wis. 44, 80 N. W. 66.

(155 Fed. 118.)

ERIE R. CO. v. KANE.

(Circuit Court of Appeals, Sixth Circuit. June 26, 1907.)

No. 1,629.

MASTER AND SERVANT—DEATH OF SERVANT—FELLOW SERVANT ACT—CONSTITUTIONALITY.

The Ohio fellow servant act of April 2, 1890 (87 Ohio Laws, p. 150), providing that, in an action for injuries to a railroad employé, it shall be no defense that the injury was caused by the negligence or default of a fellow servant, is a valid law under the Constitution of Ohio, and is not repugnant to the fourteenth amendment of the federal Constitution.

In Error to the Circuit Court of the United States for the Northern District of Ohio.

For former opinion, see 142 Fed. 682, 73 C. C. A. 672.

John H. Clarke, for plaintiff in error.

George F. Arrel, for defendant in error.

Before LURTON, SEVERENS, and RICHARDS, Circuit Judges.

PER CURIAM. The question as to whether there was evidence to go to the jury upon the question of the contributory negligence of the deceased is a close one, perhaps somewhat closer than that before us upon the former writ of error, 142 Fed. 682.[1] But the case has now been here four times, sometimes upon a writ of error by one side, and sometimes upon one sued out by the other. There must be an end of litigation. There is no such substantial difference between the former transcript upon this point and that now before us as to justify a reversal because the trial court submitted the question to the jury. The Ohio fellow servant act of April 2, 1890 (87 Ohio Laws, p. 150), is not void for repugnancy to the fourteenth amendment to the Constitution of the United States, and, as we have before held, was a valid law under the Constitution of Ohio. None of the errors assigned are well taken.

Judgment affirmed.

[1] 73 C. C. A. 672.

Digitized by Google

(155 Fed. 105.)

In re HARPER.

(Circuit Court of Appeals, Second Circuit. April 30, 1907.)

No. 131.

BANKRUPTCY—PROPERTY PASSING TO TRUSTEE—WILLS—CONSTRUCTION—PRECATORY TRUST.

A testator by a will made certain devises and bequests to each of his three sons, and left his residuary estate to his wife, "absolutely and without reservation," but expressing his desire that she should make a will, after advising with the sons, to carry out his wishes as far as practicable, confiding in her sense of justice and discretion. He subsequently revoked such will and made another leaving his entire estate to his wife, confiding in her ability and integrity to make "as early as practicable contemplated bequests which she is aware of" to the sons. After his death his wife made her will, by which she divided the greater part of her estate between the sons, share and share alike. Prior to her death a large part of the property was divided between the sons with her consent, each receiving more than was left them by the first will of their father. *Held* that, if the will of the father created a precatory trust, in the absence of any evidence as to what bequests were contemplated except the prior will, such trust had been fulfilled by the mother prior to her death, and that on her death after the bankruptcy of one of the sons the property received by him under her will came from her estate and was not a part of the assets of his estate in bankruptcy.

Petition to Review Order of the District Court of the United States for the Southern District of New York.

E. Adams and E. Bisbee, for petitioner.

E. A. Turrell, for respondent.

Before WALLACE, LACOMBE, and TOWNSEND, Circuit Judges.

PER CURIAM. In view of the very considerable pecuniary interests involved in the disposition of this case, we have thought it proper to state for future reference the reasons which were assigned orally at the conclusion of the argument for affirming the order under review. The order refused the application of the trustee to compel the bankrupt to assign and turn over to him the property which came to the bankrupt's hands from the estate of his deceased mother after the adjudication in bankruptcy. If the bankrupt's title to this property vested in him by the will of his deceased father, it inured prior to the adjudication, and would be part of the assets belonging to his creditors to be distributed in the bankruptcy proceeding.

The facts are these: April 1, 1889, John Harper, the father of the bankrupt, made his will, by which, after leaving certain bequests to nieces and nephews, he gave to his son John certain real estate and certain shares of stock, and to his son Charles certain real estate and certain shares of stock, and to his son Orlando, the bankrupt, he gave $40,000, "the sum I loaned him for aid in business and took memorandums for same payable on demand," and he also gave to him a certain watch. The remainder of his estate, real and personal, he bequeathed and devised to his wife, Lydia, "absolutely and without reservation." In a subsequent clause was this statement:

Digitized by Google

"It is also my desire that she will as soon as practical make a judicious will, advising with my sons, and being guided by the equitable laws of Pennsylvania, and to carry out my wishes as far as practicable. There are many things to do which I leave to her sense of justice and discretion."

June 3, 1889, he made a codicil to this will, revoking the devise and legacy to John, and substituting therefor a devise and bequest in trust for him of the rents and profits during his life, "the same not to be liable * * * for any debts or liabilities" of John or "subject to any execution or attachment against him," and whereby at the death of John the trustees were to account for the property to his wife and children. November 6, 1889, he canceled the will and codicil in writing, and on November 8th made a new will revoking all wills theretofore made, and giving to his wife all his real and personal estate, "confiding in her ability entirely and faultless integrity that should it be the will of God to withdraw me suddenly from earthly life that she make as early as practicable contemplated bequests which she is aware of to my sons John A. Harper, Orlando M. Harper and Charles S. Harper." In April, 1891, the testator died, leaving an estate of the value of about $1,000,000. Shortly thereafter his wife, Lydia, made her will, in which, after making a provision for her grandson, she bequeathed all the rest and residue of her estate, real and personal, to her sons, John, Orlando, and Charles, share and share alike. In February, 1902, the three sons made an agreement in respect to the distribution of the mother's estate upon her death. During her life, and with her approval, they distributed among themselves a considerable portion of her property. Mrs. Harper died in January, 1904, and subsequently her will was duly proved and admitted to probate in the probate court having jurisdiction thereof.

If a precatory trust was created by the will of the father, it was one which devolved upon the mother the duty of making by will certain contemplated bequests. There is no satisfactory evidence what bequests were contemplated, except those which were mentioned in the previous will and codicil of the father. That will indicates that he had expressed his wishes to her, and wished her to carry them out as far as practicable, being guided by the advice of her sons and the equitable laws of the state, and that he meant to leave that which remained to be done to her sense of justice and discretion. The codicil indicates that he did not wish the bequests to his sons to be such that they would lose the benefit of them in case they became financially irresponsible. So far, then, as regards all the evidence in the case, except the will of the mother herself and the subsequent arrangements made between the sons, it establishes merely that when the last will was made the father contemplated that the sons should have certain definite bequests, and such other provisions out of his estate as their mother at her discretion should see fit to make by her will. The request in the earlier will that she should be guided by the advice of her sons and the laws of Pennsylvania was omitted in the last will. She was at liberty, therefore, giving the precatory clause of the will due force, to make such disposition of all the estate coming to her by his will as she thought best and just, except as to the definite bequests in the earlier will and codicil. The fact that after the father's death

Digitized by Google

she made by her own will more liberal provisions for the sons is not very important. She knew that she had the widest discretion, and if she advised with the sons, as the father had requested her to do in the earlier will, it was not strange that she should have concluded to devise the bulk of the estate equally between them. The agreement between the sons themselves is still less important; they all wanted such a division of the estate as the one they agreed upon. The whole evidence, therefore, leads us to the conclusion that there was no precatory trust by which it became the mother's legal duty to make any disposition of the estate in favor of the sons, other than to recognize and to effectuate the bequests mentioned in the first will and codicil.

The petition in bankruptcy was filed in August, 1902. The bankrupt had previously, and during the years 1891 to 1898, inclusive, received from his father's estate in the hands of his mother money and property far in excess of any interest he had in it under the precatory trust. There was consequently no existing interest to which the title of the trustee could attach.

(155 Fed. 107.)

KENYON v. FOWLER.

(Circuit Court of Appeals, Second Circuit. June 10, 1907.)

No. 286.

BANKS AND BANKING—NATIONAL BANKS—LIABILITY OF STOCKHOLDERS OF RECORD.

One who was notified that shares of stock in a national bank had been transferred into his name, although he had in fact no interest therein, and who indorsed the certificates in blank, but took no steps to have the stock transferred to the name of the true owner, cannot avoid liability for an assessment thereon made by the comptroller to meet the debts of the bank after its insolvency.

[Ed. Note.—For cases in point, see Cent. Dig. vol. 6, Banks and Banking, § 916.

Who liable as shareholders in national banks, see notes to Beal v. Essex Savings Bank, 15 C. C. A. 130; Earle v. Carson, 46 C. C. A. 503.]

In Error to the Circuit Court of the United States for the Northern District of New York.

D. R. Cobb, for plaintiff in error.

Fowler, Crouch & Vann, for defendant in error.

Before LACOMBE, TOWNSEND, and COXE, Circuit Judges.

COXE, Circuit Judge. The action was brought by the receiver of the American Exchange National Bank of Syracuse to recover an assessment on 40 shares of stock standing in the name of the defendant on the books of the bank. The defense is that the stock was issued, and his name as owner entered upon the books, without his knowledge or consent.

It is apparent that the record does not present the entire transaction, but the salient features, so far as they appear, are as follows:

The stock register of the bank contains entries showing that on December 11, 1903, two old certificates for 20 shares each in the

Digitized by Google

name of Herman Bartels were surrendered and two new certificates for the same number of shares were issued in the name of Otis W. Kenyon, the defendant. This business was done by Carl H. Reynolds, a broker, who took the Bartels certificates to the bank, received the new certificates and receipted for them on the stubs of the scrip book. With the new certificates he went to the office of the defendant where the following interview took place:

"I told Mr. Kenyon that this was the stock of Jim Ratchford, and that Jim wanted the stock put in his [Kenyon's] name, and I told him 'here are the certificates made out in your name,' and asked him to put his name on the back of them, and assign them in blank, which he did. I took the certificates over to the office of Mr. Ratchford and delivered them to him. Never heard of them since."

The defendant testified that he first knew that his name appeared on the books of the bank some time after the failure of the bank, which occurred in February, 1904; that he never purchased any of its stock or authorized any other person to purchase for him. Regarding the interview with Reynolds he gives the following account:

"He came to my office and I was very busy, and he called me out and said, 'You are a stockholder of a bank.' He said, 'I have got the certificates here,' but I don't know whether there was one or two, 'in your name, and I wish you would assign them in blank.' I didn't even look at them; turned them on my desk bottom side up; put my name on them and he went out. I never saw them after that."

The answer contains an averment as follows:

"In the latter part of the year 1903, or early in the year 1904, one Carl H. Reynolds came to defendant's office and informed him that he had just purchased some stock in the American National Exchange Bank of Syracuse, and had taken it in his [defendant's name], and asked defendant, since he had no interest in the same, to formally assign it, which defendant then and there did."

We are of the opinion that the following facts are established:

First. The defendant's name appeared on the books of the bank as a stockholder, two certificates for 20 shares each having been issued in his name.

Second. The defendant knew that the certificates were taken in his name and he knew, or should have known, that his name appeared as a stockholder on the books of the bank.

Third. In December, 1903, the defendant duly assigned the certificates in blank and has not seen them since.

Fourth. The defendant made no effort to have his name removed from the books of the bank as a stockholder or to have the name of the legal owner of the certificates substituted.

Fifth. On August 9, 1904, the Comptroller of the Currency made an assessment of $67 per share on the stockholders of the bank pursuant to the provisions of the National Bank Act.

Upon the undisputed testimony it was the duty of the court to direct a verdict, it being manifest that there was no question of fact for the jury to determine.

It cannot be denied that the rule invoked by the plaintiff, and followed by the Circuit Court, is a severe and drastic one imposing upon the

Digitized by Google

stockholder the duty, after he has sold and assigned his stock, of seeing to it that his name is removed from the books of the bank. In the case at bar the defendant would have had no difficulty in doing this, but in many cases, where the certificates are assigned in blank and the stockholder does not know who the purchaser is, it might become an exceedingly arduous and complicated undertaking. Nevertheless, we are constrained to hold, under the authorities which must govern our action, that the court below was right in directing a verdict for the plaintiff. Harsh as the rule may seem, it is clear that it is necessary for the speedy and efficient winding up by the Comptroller of the affairs of insolvent banks. He cannot enter upon an investigation and hear proofs pro and con to determine who are the stockholders, and the reasons are manifest and cogent for holding that, in making his assessment, he is justified in relying upon statements found in books of the bank. They are at least prima facie evidence. There was nothing to indicate to the Comptroller that the defendant had parted with his stock and the defendant, with full knowledge of the facts, not only failed to repudiate the action of Reynolds in having the shares taken in his name, but took no steps to have them registered in the name of the true owner. He cannot now, as against creditors, be permitted to dispute his liability.

In Keyser v. Hitz, 133 U. S. 138, 149, 10 Sup. Ct. 290, 294, 33 L. Ed. 531, the court, says:

"We must not be understood as saying that the mere transfer of the stocks on the books of the bank, to the name of the defendant, imposed upon her the individual liability attached by law to the position of shareholder in a national banking association. If the transfers were, in fact, without her knowledge and consent, and she was not informed of what was so done—nothing more appearing—she would not be held to have assumed or incurred liability for the debts, contracts and engagements of the bank. But if, after the transfers, she joined in the application to convert the savings bank into a national bank, or in any other mode approved, ratified or acquiesced in such transfers, or accepted any of the benefits arising from the ownership of the stock thus put in her name on the books of the bank, she was liable to be treated as a shareholder, with such responsibility as the law imposes upon the shareholders of national banks."

In Finn v. Brown, 142 U. S. 56, 12 Sup. Ct. 136, 35 L. Ed. 936, 50 shares of stock were transferred to the defendant without his knowledge and consent. The court, at page 67 of 142 U. S. and page 139 of 12 Sup. Ct., said:

"He is presumed to be the owner of the stock when his name appears upon the books of the bank as such owner and the burden of proof is upon him to show that he is in fact not the owner."

The court held that being acting cashier and director of the bank he was presumed to know what the list of shareholders, required by law to be kept, contained; and, at page 70 of 142 U. S. and page 140 of 12 Sup. Ct., the court says:

"No general rule can be laid down as to what will constitute, in any particular case, an acceptance of the transfer of stock or the equivalent thereof, in a case where the transferee is in fact ignorant of the fact of transfer; but each case must be decided on its own facts. * * * The defendant, as vice-president and acting cashier of the bank, had the power himself to transfer the 40 shares back to McNany and the 10 shares back to De Walt. He did

Digitized by Google

not do so, but, knowing that the 50 shares had been transferred to his credit and stood in his name upon the books, he suffered the matter to remain in that shape for twenty days, until the doors of the bank were closed."

The judgment against him was affirmed.

See, also, Richmond v. Irons, 121 U. S. 27, 58, 7 Sup. Ct. 788, 30 L. Ed. 864; Matteson v. Dent, 176 U. S. 521, 20 Sup. Ct. 419, 44 L. Ed. 571; Rankin v. Insurance Co., 189 U. S. 242, 23 Sup. Ct. 553, 47 L. Ed. 792; Greene v. Sigua Iron Co., 88 Fed. 207, 215, 31 C. C. A. 458; Davis v. Stevens, 17 Blatchf. 259, Fed. Cas. No. 3,653; Lewis v. Switz (C. C.) 74 Fed. 381. We do not regard the case of Glenn v. Garth, 133 N. Y. 18, 30 N. E. 649, 31 N. E. 344, as in conflict with the views above expressed. Indeed, Judge Finch, in disposing of the motion for a reargument, recognizes the rule for which the receiver here contends. "It is insisted," he says, "that we have violated the rule that one who authorizes and permits a transfer to himself of shares of stock upon the books of a corporation must be held to be a stockholder, whether in truth the real owner or not, when the rights of corporate creditors are involved, and is equitably estopped from denying the apparent relation. I admit the rule and have nowhere doubted or denied it." The defendant was released upon the peculiar facts there developed because the transfer to him on the books was a mistake which he immediately repudiated and sought to undo. Here, on the contrary, the defendant acquiesced in the broker's acts and at no time expressed his disapproval.

The judgment is affirmed with costs.

TOWNSEND, Circuit Judge, heard the argument, participated in the consultations, and voted to affirm.

(155 Fed. 110.)

MAXWELL v. FEDERAL GOLD & COPPER CO.

(Circuit Court of Appeals, Eighth Circuit. July 5, 1907.)

No. 2,449.

1. COURTS—JURISDICTION OF FEDERAL COURTS—CONTROVERSY BETWEEN CITIZEN OF STATE AND CITIZEN OF TERRITORY.

   Diversity of citizenship between citizens of different states is indispensable to sustain the jurisdiction of a federal court on that ground.

   A controversy between a citizen or citizens of a state or states and a citizen or citizens of a territory or territories will not confer jurisdiction upon a national court.

   [Ed. Note.—For cases in point, see Cent. Dig. vol. 13, Courts, § 853.

   Diverse citizenship as a ground of federal jurisdiction, see notes to Shipp v. Williams, 10 C. C. A. 249 and Mason v. Dullagham, 27 C. C. A. 298.]

2. SAME—TERRITORIAL LAWS NOT LAWS OF UNITED STATES.

   The laws enacted by a territorial Legislature, subject to disapproval by Congress, are not laws of the United States, and a suit arising under them, as where a corporation organized under them is a party to the suit, does not arise under the laws of the United States, and a federal court has no jurisdiction on that ground.

   [Ed. Note.—For cases in point, see Cent. Dig. vol. 13, Courts, § 820.]

Digitized by Google

3. SAME—JURISDICTION—LACK OF, FATAL TO GENERAL JUDGMENT FOR DEFENDANT.

Where the court has no jurisdiction, a general judgment for the defendant is erroneous, because it renders the merits of the case res adjudicata. It must be reversed and a judgment of dismissal for want of jurisdiction, or without prejudice, entered.

[Ed. Note.—For cases in point, see Cent. Dig. vol. 13, Courts, § 158.]

(Syllabus by the Court.)

In Error to the Circuit Court of the United States for the District of Minnesota.

H. V. Mercer (George P. Wilson, on the brief), for plaintiff in error.

M. B. Webber (Edward Lees, on the brief), for defendant in error.

Before SANBORN and HOOK, Circuit Judges, and PHILIPS, District Judge.

SANBORN, Circuit Judge. This writ of error challenges a judgment for the defendant upon a jury trial in an action brought by Maxwell, a citizen of Minnesota, in the Circuit Court for the District of Minnesota, to recover of the Federal Gold & Copper Company, a corporation organized under the laws of the territory of Arizona, $35,000 damages for the conversion of some of its stock which the plaintiff claimed to own. Upon the opening of the argument in this court attention of counsel for the plaintiff in error was called to the familiar rule that the only diversity of citizenship which confers jurisdiction upon a federal court is diversity between citizens of different states, or between an alien and a citizen of a state, and that diversity of citizenship between citizens of a state and citizens of a territory has no such effect. City of New Orleans v. Winter, 1 Wheat. 91, 94, 4 L. Ed. 44; Barney v. Baltimore City, 6 Wall. 280, 287, 18 L. Ed. 825; Watson v. Bonfils, 116 Fed. 157, 53 C. C. A. 535; Snead v. Sellers, 66 Fed. 729, 15 C. C. A. 631.

But counsel invoke the provisions of section 1891 of the Revised Statutes that "the Constitution and all laws of the United States which are not locally inapplicable shall have the same force and effect within all the organized territories and in every territory hereafter organized as elsewhere within the United States," and argue that, as citizens of the states have the right to the trial of their controversies with citizens of other states in the national courts, the citizens of the territories have the like right, under this statute, to the trial of their controversies with the citizens of the states. But the Constitution and laws of the United States do not grant to citizens of the states the right to the trial of their controversies with citizens of the territories in the federal courts (Act March 3, 1887, c. 373, 24 Stat. 552, and Act Aug. 13, 1888, c. 866, 25 Stat. 433 [U. S. Comp. St. 1901, p. 508], and, as the Constitution and laws have the same effect in the territories as in the states, they fail to confer upon the citizens of the territories this right. In the second place, the right to try the controversy in this case is invoked by a citizen of a state, and not by a citizen of a territory.

Another contention of counsel is that the defendant is a corporation organized under a statute of the territory of Arizona, that

Digitized by Google

the laws of the territories are laws of the United States because they are subject to nullification by Congress (Rev. St. §§ 1850, 1851), and hence that this case involves the construction of, and arises under, a law of the United States, under the decisions in Union Pac. Ry. Co. v. Myers, 115 U. S. 1, 5 Sup. Ct. 1113, 29 L. Ed. 319; Texas & Pac. Ry. Co. v. Cox, 145 U. S. 593, 12 Sup. Ct. 905, 36 L. Ed. 829; U. S. Freehold, Land & Em. Co. v. Gallegos, 89 Fed. 769, 32 C. C. A. 470. But the laws of the territories are not laws of the United States. Ex parte Moran, 75 C. C. A. 396, 405, 144 Fed. 594, 603; Linford v. Ellison, 155 U. S. 503, 508, 15 Sup. Ct. 179, 39 L. Ed. 239; Maricopa & Phenix Railroad v. Arizona, 156 U. S. 347, 351, 15 Sup. Ct. 391, 39 L. Ed. 447. This suit, therefore, did not arise under the Constitution or laws of the United States, it does not involve a controversy between citizens of different states, and the court below had no jurisdiction of it.

The judgment of the Circuit Court, however, is a general judgment for the defendant. It is erroneous, and must be reversed because it renders the issues in the action res adjudicata. The proper judgment is one of dismissal of the action for want of jurisdiction, or without prejudice. Speer v. Board of County Commissioners, 32 C. C. A. 101, 105, 88 Fed. 749, 753; Indian Land & Trust Co. v. Shoenfelt, 68 C. C. A. 196, 199, 135 Fed. 484, 487, and cases there cited.

The judgment below is reversed, and the case is remanded to the court below with directions to dismiss the action for want of jurisdiction.

(155 Fed. 112.)

THE RICHMOND. THE BOSWELL. THE IOWA. THE JAMES W. ELWELL. THE POWELL.

(Circuit Court of Appeals, Second Circuit. June 11, 1907.)

Nos. 12, 13, 14.

1. COLLISION—MEETING TOWS AND OVERTAKING SCHOONER—FAULT OF TUG.

A double collision at sea, one between a schooner and a barge in tow, and a resulting collision between two other tows, *held* due solely to the fault of one of the tugs, which, on meeting another tug with two tows, which were being overtaken by a schooner, passed to the port of such tug and tows, although her own tows were sagging in that direction on account of the wind and failed to make sufficient allowance for such sagging, the result being that the schooner was pocketed and compelled in extremis to change her course.

[Ed. Note.—For cases in point, see Cent. Dig. vol. 10, Collision, § 78. Overtaking vessels, see note to The Rebecca, 60 C. C. A. 254.]

Appeal from the District Court of the United States for the Southern District of New York.

For opinion below, see 143 Fed. 996.

Butler, Notman & Mynderse and T. M. Brown, for The Boswell.

Robinson, Biddle & Ward (W. S. Montgomery, of counsel), for The Elwell.

Moen & Kilbreth, for The Richmond.

Wing, Putnam & Burlingham and James Forrester, for The Powell.

Before LACOMBE, TOWNSEND, and COXE, Circuit Judges.

Digitized by Google

PER CURIAM. We do not think anything will be gained by rehearsing the contentions of the several parties or by discussing the testimony of the witnesses. In its ultimate analysis the cause presents questions of fact only. Although as to some of the propositions advanced there is a close concurrence between the statements of many of the witnesses, a more careful study of the movements of these eight vessels leads to the conclusion that such concurrence is not entitled to the weight which is sought to be attached to it.

At the base of the whole case there lie two questions: (1) Were or were not the movements of the tugs and tows such as to make the lane of water between them practically a cul-de-sac, dangerous for the schooner to navigate? (2) Did or did not the schooner, after coming in sight of the tows, make a change of course so as to enter into this lane, or did she hold her course, at a safe distance, from the tow she was overtaking, until the converging side of the lane caused by the sagging of the Boswell's barges made it necessary for her to change in order to avoid the latter? (3) And a third question, supplementary to the others, is whether or not the Elwell failed to discover the presence of the Powell until she was so close upon her that her own navigation was thereby seriously interfered with.

Taking the last question first, we are satisfied that the contention made in argument that the mate of the schooner did not discover the Powell till he was within 50 feet of her is a misinterpretation of the answers of the witness. We find nothing in his testimony to qualify his positive statement that he saw her as he was just passing astern of the Dempsey, which would be at the distance of nearly 1,000 feet away. We concur with the district judge that at that time the Elwell "was already pocketed by the tows," and that she was in a position of peril which she herself had not contributed to produce.

As to the second question. We place no reliance upon the statement of the witnesses, even from the schooner, that there was a considerable breadth of water near the place of collision. The circumstance that the Iowa, whose hawser to the Indiana (1020 feet long) did not part, was struck by the Powell about her fore-rigging, shows conclusively that the distance between the Elwell and Powell must have been less than that. We do not credit the estimate of the master of the Iowa that he sheered out of his course 800 feet. His collision with the Powell took place, as the master of the Indiana says, over the latter's quarter. We are satisfied that the estimate of the master of the Powell that the distance between himself and the Indiana when he passed her was 300 or 400 feet is more nearly accurate, and that he passed the Richmond still closer. Indeed, we are inclined strongly to the belief that the Richmond did stop or slow to aid the Powell in making clearance—a point sharply in dispute between the mate of the schooner and the master of the Richmond. But it is not necessary to decide this last point. The lane of water between the tows narrowed from nearly half a mile to a width so small as to make it a perilous task to take the schooner through. Once in the lane, she was practically "pocketed by the tows" as the district judge finds. And we concur in the conclusion that the Boswell was in fault for not sooner taking

Digitized by Google

action to haul her sagging tows to the westward when she first saw the schooner.

As to the first question. Despite the array of witnesses from the tows, we are satisfied that the schooner did not make the extraordinary and unaccountable change of course attributed to her across the bow of the Boswell, but that she maintained her course until the converging side of the cul-de-sac forced her to change it in order to avoid the sagging barges.

Whatever errors of navigation were committed when the bottom of the pocket was reached and the four colliding vessels were in close proximity were in extremis as the district judge finds, and, the extremity not having been produced by either of the four, they should not be held. On the whole case we concur with the district judge.

The decree is affirmed, with interest and a single bill of costs against the Boswell.

TOWNSEND, Circuit Judge, heard argument, participated in consultation, and voted to affirm, but did not see the opinion.

(155 Fed. 114.)

GREAT SOUTHERN GAS & OIL CO. v. LOGAN NATURAL GAS & FUEL CO.

(Circuit Court of Appeals, Sixth Circuit. May 25, 1907.)

No. 1,612.

CONFUSION OF GOODS—DAMAGES—ACCOUNTING FOR TRESPASS—MINGLING OF GOODS.

Defendant wrongfully entered upon land on which complainant held a valid oil and gas lease, and drilled a well from which it continued to take and market gas pending suit by complainant to establish its rights. Defendant conducted the gas into a pipe line in which gas from 60 wells was mingled, taking no measures to determine the quantity or value of the gas so wrongfully taken. *Held*, that on an accounting therefor, conceding that defendant's claim of right was made in good faith, it was bound to fully compensate complainant for its loss, and that in ascertaining such compensation every reasonable doubt should be resolved against it; that under the evidence and the peculiar circumstances of the case complainant was entitled to recover one-sixtieth part of the amount realized by defendant from the entire product of the 60 wells.

[Ed. Note.—For cases in point, see Cent. Dig. vol. 10, Confusion of Goods, § 15.]

Appeal from the Circuit Court of the United States for the Southern District of Ohio.

F. A. Durban and Wm. B. Sanders, for appellant.

G. E. Shaw and C. H. Grosvenor, for appellee.

Before LURTON, SEVERENS, and RICHARDS, Circuit Judges.

PER CURIAM. This case was here upon the questions arising over conflicting leases of the oil and gas rights in the same land. The facts are fully stated in our former opinion. 126 Fed. 623, 61 C. C. A. 359. Shortly after the litigation began defendants struck gas, and they continued to take and market the gas until the well was exhausted.

Digitized by Google

The court below referred the case to a special master for an accounting as to the value of the gas. It appeared that the gas from the well was conducted to a pipe line, together with the gas from some 60 wells owned by the defendant, and that no serious effort was made to measure the contribution of this well to the pipe line. Upon the theory of confusion of goods by a trespasser, the master charged the defendant with the gross receipts for the entire product of its 60 wells aggregating over $1,000,000. Upon exceptions this report was set aside, and the value of the gas fixed by the Circuit Judge at $10,000, that being the estimated market value of a gas well of the approximate productiveness of this well in the Sugar Grove field. The plaintiff assigned error to this decree. That it was a trespasser ab initio must be now conceded. That it continued to use this gas during the litigation which denied its title, and that it did this taking no care to determine the amount of the gas or its value thus wrongfully taken, must be also conceded. Conceding that it was a good faith claimant and that the litigation was not flimsy, but bona fide, it nevertheless remains that it must fully compensate the plaintiff. Powers v. U. S., 119 Fed. 562, 56 C. C. A. 128; Jegon v. Vivian, L. R. 6 Ch. App. 742, 761; Whitney v. Huntington, 37 Minn. 197, 33 N. W. 561; Ross v. Scott, 15 Lea (Tenn.) 479. Having taken no step by which it can account for the property of plaintiff, it must submit to every inconvenience in ascertaining that compensation and all reasonable doubts which arise in that accounting. Wetherbee v. Green, 22 Mich. 311, 7 Am. Rep. 653. The reasonable market value of a gas well does not, under the peculiar circumstances, compensate plaintiff. That would be to give it only the value of the gas in the ground. That might be adequate but for the fact that plaintiff had its own pipe line, and could therefore market gas from this well with little addition to the cost of conducting its business.

This well is also shown to have been a larger producer than the average well in this field. It also appears that all of the wells contributing to defendants' pipe line did not contribute during the entire life of this well, and, further, that the appellant was obliged to buy gas of appellee to meet its own requirements. In view of all of the facts, we conclude that an aliquot part of the gross product of 60 wells will not be an unjust compensation. Cooley on Torts, 53; Sutherland on Damages, § 101; Moore v. Bowmen, 47 N. H. 494, 500. The gross product was marketed for $1,003,813. One-sixtieth part of this is $16,730.21. The decree will be therefore modified so as to fix the damages at that sum, with interest from the date of our former decree affirming the decree of the Circuit Court, and costs.

Digitized by Google

(155 Fed. 116.)

BONG v. ALFRED S. CAMPBELL ART CO.

(Circuit Court of Appeals, Second Circuit. May 30, 1907.)

No. 275.

COPYRIGHT—PAINTING—ASSIGNMENT OF RIGHT.

Where the author or owner of a painting is a citizen or subject of a foreign nation having no reciprocal copyright relations with the United States, and therefore not entitled to copyright such painting under Rev. St. § 4952 [U. S. Comp. St. 1901, p. 3406], as amended by Act March 3, 1891, c. 565, 26 Stat. 1110 [U. S. Comp. St. 1901, p. 3417], he cannot, while retaining the painting itself, convey such right to another.

In Error to the Circuit Court of the United States for the Southern District of New York.

M. J. Kohler, for plaintiff in error.

Baggott & Ryall, for defendant in error.

Before LACOMBE, TOWNSEND, and COXE, Circuit Judges.

PER CURIAM. This is an action under the copyright statutes to recover penalties and forfeiture for infringement of alleged copyright of a painting. Verdict in favor of defendant was directed by the court upon the pleadings and opening. It thereby appeared that one Hernandez was the author of the painting, and that he was and always had been a citizen of Peru. The plaintiff is a citizen and subject of Germany. Section 13 of the act of March 3, 1891, 26 Stat. 1110, c. 565 [U. S. Comp. St. 1901, p. 3417], amending Rev. St. § 4952 [U. S. Comp. St. 1901, p. 3406], provides that the copyright act shall apply only to a citizen or subject of a foreign state or nation when such foreign state or nation permits to citizens of the United States the benefit of copyright on substantially the same basis as its own citizens, or when such foreign state or nation is a party to an international agreement which provides for reciprocity in the granting of copyright, by the terms of which agreement the United States of America may at its pleasure become a party to such agreement. The existence of either of the conditions aforesaid shall be determined by the President of the United States by proclamation made from time to time. No such proclamation has ever been made as to Peru. It is conceded that Germany is within the terms of the section. Prior to November, 1902, Hernandez executed documents purporting to convey to the plaintiff the right to enter the painting in his (plaintiff's) own name as proprietor for copyright protection in the United States, and also the exclusive right of reproduction in colors, and also the exclusive right of engraving, etching, and lithography in black and in colors, reserving, however, the right of photography and reproduction by all photographic monochrome processes. Thereafter plaintiff took the usual steps to secure copyright of the painting. For aught that appears the painting still belongs to Hernandez.

The peculiar form of assignment of rights of reproduction, conveying part and reserving part, presents an interesting question which need not be here discussed. The concessions as to citizenship are sufficient to dispose of the case. It has been held that when a person is

Digitized by Google

the author or proprietor of a painting, and has the right under our statute to secure a copyright on the same, he may separate the two, selling the right to take out a copyright to one person, while he himself retains the original painting, or sells it, without copyright privileges, to another person. We know of no authority which holds that when a person is the author or owner of a painting, but has no right under our statutes to secure a copyright here, he may nevertheless, while retaining the painting, convey to some one else what he does not own himself, viz., the right to take out copyright. In the absence of controlling authority we are unwilling so to hold, believing that such a construction would be judicial legislation defeating the very object which Congress, by the thirteenth section above cited, sought to obtain.

The judgment is affirmed.

(155 Fed. 117.)

UNITED STATES ex rel. SCHAUFFLER v. FIDELITY & DEPOSIT CO. OF MARYLAND.

(Circuit Court of Appeals, Second Circuit. May 30, 1907.)

No. 285.

APPEAL AND ERROR—TIME OF TAKING PROCEEDINGS—EFFECT OF MOTION TO VACATE JUDGMENT.

The six months allowed by statute for suing out a writ of error for the review of a judgment by the Circuit Court of Appeals cannot be extended by a motion in the trial court to vacate the judgment, filed after such time has expired, which brings nothing new into the record, but is in effect merely a motion to reargue the question whether the judgment was warranted by the record.

In Error to the District Court of the United States for the Southern District of New York.

See 147 Fed. 228.

Creevey & Rogers, for plaintiff in error.

Frank H. Platt and Henry W. Clark, for defendant in error.

Before LACOMBE, TOWNSEND, and COXE, Circuit Judges.

LACOMBE, Circuit Judge. The action was brought by the trustee in bankruptcy of George W. Mosely to recover upon a bond given by defendant for the faithful performance of his duties by a former trustee of the same estate, who was alleged to have defaulted. Issue being joined in the District Court, an order was made on March 17, 1903, sending the cause to a referee to take testimony and report. Subsequently, and while the hearing was still proceeding before the referee, such order was amended (June 21, 1904) so as to direct the referee to hear and determine the issues. Thereafter, the referee having rendered his decision in favor of defendant, said decision with the pleadings, orders, testimony, and exhibits came before the District Court, which on November 1, 1905, directed that judgment be entered in favor of defendant, dismissing the complaint on the merits with costs. Judgment was formally entered November 8, 1905. Plaintiff took an

Digitized by Google

appeal from such judgment to the Circuit Court of Appeals, which was dismissed; but he applied for no writ of error within the six months limited by statute for proceedings to review a judgment of the District Court in the Court of Appeals. About four weeks subsequent to the expiration of the six months he moved in the District Court for an order vacating the judgment, on the ground that it was null and void by reason of the fact that said court was without jurisdiction, authority, or power to direct the entry of the same, or to amend the order of reference without relator's consent, and for the further reason that said judgment was irregularly entered. The motion was denied, and this writ of error was sued out to review such denial.

Before disposing of the case, it may be noted that we do not express any opinion upon the question whether or not a trustee in bankruptcy is "an officer of the United States authorized by law to sue" in the District Court, under the fourth paragraph of section 563, Rev. St. [U. S. Comp. St. 1901, p. 456]. The point made by plaintiff is that there was no jurisdiction to order a reference to hear and determine without plaintiff's consent or to enter judgment upon a referee's report made in conformity with such order. To reverse or vacate a judgment upon such theory, it would, of course, have to be shown that the order of reference complained of was not consented to or acquiesced in. No facts are set forth in the moving papers which were not before the District Court when judgment was ordered and entered. Every proposition which is now advanced could have been fully presented upon a writ of error to review the judgment itself.

We are of the opinion that the case is within the principle laid down in Conboy v. First Nat. Bank of Jersey City, 203 U. S. 141, 27 Sup. Ct. 50, 51 L. Ed. 128. In substance and effect the motion was an application to the District Court to reargue the question whether upon the record before it in November, 1905, judgment should or should not have been entered. Having allowed the time to review the decision embodied in that judgment to expire, plaintiff cannot, by any motion for reargument or similar relief, extend such time beyond the limit fixed by statute.

The order is affirmed.

(155 Fed. 62.)

NATIONAL STEEL CO. v. HORE.

(Circuit Court of Appeals, Sixth Circuit. June 15, 1907.)

No. 1,632.

1. MASTER AND SERVANT—INJURY OF SERVANT—ASSUMPTION OF RISK.

To defeat recovery for an injury to a servant by the defense of assumption of risk, the master must show not only that the servant knew of the negligence of which he complains, but that he knew and understood, or ought to have known and appreciated, the increased danger to which he voluntarily exposed himself by reason of such negligence.

[Ed. Note.—For cases in point, see Cent. Dig. vol. 34, Master and Servant, § 575.]

2. SAME.

A copper water block in the wall of a blast furnace being operated by defendant blew out, and plaintiff, who was a plumber's helper in defend-

Digitized by Google

ant's employ, was injured by the molten metal which escaped. The block, which was embedded in the wall, had become leaky, and preparations had been made to remove it, which could only be done when the blast was off. After much of the cement packing which held it in the wall had been removed, it was decided to allow it to remain for some hours, until the next blast should be off, in order to make repairs to the water system, which had also become defective at the same time. When the removal was about to be made, and while the furnace was still being operated, plaintiff was ordered upon a platform near the block to shut off the water, when the block was pulled, and was there when it blew out. *Held* that, although plaintiff knew of the defective water system, that the furnace was in full blast, and that a part of the packing had been removed from around the block, it could not be said as matter of law that he assumed the risk arising from such conditions, where it did not appear that he knew the dangers therefrom, or that his experience had been such that he should have known that there was danger that the block would blow out.

[Ed. Note.—For cases in point, see Cent. Dig. vol. 34, Master and Servant, §§ 1068, 1077.

Assumption of risk incident to employment, see note to Chesapeake & O. R. Co. v. Hennessey, 38 C. C. A. 314.]

In Error to the Circuit Court of the United States for the Eastern Division of the Southern District of Ohio.

James C. Tallman, for plaintiff in error.

Fred S. Gates, for defendant in error.

Before LURTON, SEVERENS, and RICHARDS, Circuit Judges.

LURTON, Circuit Judge. By the sudden blowing out of a copper water block in the wall of one of the blast furnaces operated by the National Steel Company, John Hore, a plumber's helper, in the employment of the company, sustained severe injuries, for which he has recovered a judgment.

The facts essential to be stated are these: One of these blocks became leaky, and, preparatory to pulling it out to replace it with another, the plaintiff, John Hore, was directed by the manager of the furnace to ascend to a small platform, conveniently placed for removing this block, for the purpose of being ready to disconnect the iron water pipe which supplied it with water. Almost immediately upon his reaching his proper place, and before the blast had been shut off, this block blew out, and the molten contents of the furnace were ejected with great force in every direction.

These water blocks were hollow blocks of copper placed in many places in the wall of the furnace, through which, for the purpose of cooling the walls, a constant circulation of cold water was maintained. There was evidence tending to show that a water block could be pulled only when the blast was off, and that it was usually done when the blast was off for making a cast. Preparation for removing this block at the 9 o'clock morning cast had been made by removing much of the cement packing which held it in the wall and by giving direction to the plumber and his helper, Hore, to be ready then to disconnect the water pipe connections. There was evidence tending to show that not long prior to 9 o'clock it was reported to the manager that the filter in the water tank was clogged, and the brush, which was the mechanism

Digitized by Google

used for cleaning it, had gotten out of repair and would not operate. Thereupon the manager directed that preparation should be made for repairing the water system at the 12 o'clock cast, and the pulling of this water block postponed until then, that both jobs might be done when the blast should be shut off at 12 o'clock. The petition avers that it was negligent to keep the hot air blast on with a defective water circulation through a water block thus weakened by the cutting away of the cement casing which held it in place.

The case has been made to turn in the argument here chiefly upon the question as to whether Hore did not assume all the risks incident to assisting in the removal and replacing of this water block. This defense was made by demurrer to the petition, by request for a peremptory instruction, by request for special charges bearing upon the doctrine of assumption of risk, and by exceptions to parts of the charge as delivered. The demurrer was rightly overruled.

The petition does not deny that plaintiff knew that the water system had broken down, that the packing had been in part removed from around this block, nor that the furnace was being operated under full blast, when in obedience to the order of the master he took his place near this water block to disconnect its water connections. But it does aver that he was "ignorant of the danger" resulting from this state of facts. Now, knowledge of the conditions which surround the doing of a thing by a workman does not always imply knowledge of the dangers which confront him. The fact known, the defect which he sees, or should see if ordinarily observant, may present dangers so obvious that the law will conclusively presume that he did know the danger; no other inference being reasonable. Indeed, the inference in some circumstances is so strong that the denial of appreciation will be of no avail, for the law will say: "You should have known if you had been reasonably attentive to your own safety." Cooley on Torts, 1042 (3d Ed.), and cases cited. Cases in which this court has indulged the presumption of a voluntary assumption of risk are not rare in our opinions. See Detroit Crude-Oil Co. v. Grable, 94 Fed. 73, 36 C. C. A. 94; Railroad Co. v. Hennessy, 96 Fed. 713; Narramore v. Cleveland, etc., Ry. Co., 96 Fed. 298, 37 C. C. A. 499, 48 L. R. A. 68; Kenney v. Meddaugh, 118 Fed. 209, 55 C. C. A. 115; and Riley v. Louisville & Nashville R. R. Co., 133 Fed. 904, 66 C. C. A. 598. See, also, Reed v. Moore & McFerrin, 153 Fed. 358, and Coal Creek Co. v. Davis, 90 Tenn. 715, 716, 18 S. W. 387.

In the Grable Case, cited above, the contention was that, while the plaintiff might know of the defect by which he was hurt and be chargeable with knowledge of danger therefrom, "he did not anticipate being hurt in the way he was," and therefore a risk not assumed by the plaintiff. But in that case it appeared that the defect was known to the plaintiff and had been complained of. The court also found that the plaintiff was a mature and experienced man, and the danger to be apprehended presumably better known to him than the master. This court therefore said:

"When the defect is known, and the danger apparent, it is immaterial that the servant does not anticipate the precise extent or character of the injury which may result. None of the authorities upon the subject put the rule of

Digitized by Google

assumption of risks upon the narrow distinction that the servant may know of the danger, but not fully realize the extent or character of the injury which may be sustained."

On the other hand, this court has more than once held that the question whether one had knowingly assumed the risk of a particular defect was dependent upon the particular circumstances of the case, and, when more than one inference might be drawn, reasonably, it was a question for the jury. Valley Ry. Co. v. Keegan, 87 Fed. 849, 31 C. C. A. 255; Felton v. Girardy, 104 Fed. 127, 43 C. C. A. 439; Mason, etc., Ry. Co. v. Yockey, 103 Fed. 265, 43 C. C. A. 228; and Choctaw, etc., Ry. Co. v. McDade, 112 Fed. 888, 50 C. C. A. 591.

In the Keegan Case we said:

"Before a court is authorized to presume, as matter of law, that an employé accepts the dangers incident to defective machinery or roadbed, it must appear that he accepted employment with actual knowledge of such defect and its dangers, or that he continued in the service after he acquired knowledge, or by due care and reasonable attention might have known of the danger. To justify a presumption of knowledge, the defect must be obvious and its danger equally plain to one at all attentive. The facts here do not make a case where the court could justifiably say that Keegan's ignorance of the dangerous character of this space in the roadbed was unjustifiable in law, and his acceptance of the risk presumed."

The fact that plaintiff was a mature man and had had some experience about this furnace might well charge him with the assumption of the ordinary risks of his employment, including those which might ordinarily inhere in the replacement of a leaky water block. But the facts stated in the petition present a concurrence of circumstances which might or might not indicate danger that the block might blow out. It was the duty of the plaintiff in error to guard against such accidents as could be foreseen as liable to occur by the exercise of reasonable care, and the defendant in error had a right to assume that the master had not unreasonably and negligently subjected him to danger that this block would blow out. To assume as matter of law that a common laborer, such as Hore was, should have known that there was this danger from the facts known to him, is going too far. To determine the effect of the conditions known to him in producing hazard, not ordinarily incident to his service in aiding in the disconnection of the water pipes supplying the block to be removed, would require a skill and judgment which ought not to be attributed, as matter of law, to one who is described in the petition as a plumber's helper and whose experience about such work does not appear.

To defeat an action by the defense of assumption of risk, the employer must show not only that the servant knew of the negligence of which he complains, but that he knew and understood, or ought to have known and appreciated, the increased danger to which he voluntarily exposed himself. There is a distinction between knowledge of defects or knowledge of alleged negligent acts, and knowledge of the risks resulting from such defects or acts. In Cooley on Torts (3d Ed.) 1048, the rule is stated in these words:

"It is essential to the assumption of risk, not only that the servant shall know the defect out of which the danger arises, but that he should appreciate

Digitized by Google

the danger, or that the danger should be manifest to a man of ordinary intelligence and experience in the line of work in which the servant is engaged."

This is in accord with the great weight of authority. Welle v. Celluloid Co., 175 N. Y. 401, 405, 67 N. E. 609; Iron Co. v. Pace, 101 Tenn. 476, 48 S. W. 232; Thomas v. Quaterman, L. R. 18 Q. B. Div. 1886–87, 685, 696 et seq.; Clark v. Holmes, 7 H. & N. 937, 949; Moylon v. McDonald, 188 Mass. 499, 74 N. E. 929; McDonald v. Champion Iron Co., 140 Mich. 401, 103 N. W. 829; and Hartrich v. Hawes, 202 Ill. 334, 67 N. E. 13.

Neither was there error in refusing to instruct the jury that under the facts the plaintiff had assumed the risk of the danger that this water block would blow out. The case was a somewhat close one upon the facts; but there was evidence that the plaintiff had had but a short experience about such a blast furnace as this was, though he had had a long experience about a puddling furnace and rolling mills as a common laborer. We are not prepared to say that the court erred in letting the case go to the jury upon this matter.

The assignments based upon the refusal of the court to give certain requests which were made by the defendant were grounded upon the theory that plaintiff's knowledge of the conditions necessarily involved knowledge of the danger that under such conditions this block might blow out. We need not go over this matter again. The ruling upon the demurrer covers this matter as well as the exceptions to the charge as given, which was the converse of these requests. The case in respect to the points not involved in the doctrine of assumption of risks is substantially identical with National Steel Co. v. Lowe, 127 Fed. 311, 62 C. C. A. 229. This accident and the injury to Lowe occurred at the same time, and the trial judge applied the principles determined in that case to this. The assignments of error which raise questions there decided are overruled upon the authority of that case.

Judgment affirmed.

NOTE.—The following memorandum was filed in the clerk's office of the District Court in this cause on overruling the motion for a new trial:

The evening before the accident, Thomas, the general superintendent, directed Chisholm, the plumber, to be ready to take the block out the next morning, and during the night a part of the packing about the block was removed, and the next morning Chisholm disconnected the pipes and put gum hose in their place, and afterwards told Thomas that the brush on the strainer in the water tank "had become disconnected," and Thomas then postponed the removal of the block from 9 o'clock to 12 o'clock a. m., saying that he would "fix both things at 12 o'clock," the brush and the block. In the meantime the platform 4 or 5 feet high had been erected to enable the men to reach the block, and the necessary appliances for its removal were provided. Thomas, the general superintendent, was present supervising the work. The situation was described by the plaintiff on the witness stand, as follows: "At the 12 o'clock cast we were standing around there by the orders to get ready; each man at his post ready to go to work. * * *" And Thomas said: "Now then, John, you and Bogus go up there and get ready to break that connection." In obedience to that order the plaintiff got on the platform, and in a minute or two the explosion took place. Thomas supervised the work from the beginning to the end. The accident was not caused by the negligence of the fellow servants of the plaintiff. It was not caused by the fact or the manner of the removal of a part of the mortar packing, nor by any unskillfulness in the repair of the water apparatus, but was caused by the negligence of the master in delaying

Digitized by Google

the repair of the water apparatus and the removal of the water block until 12 o'clock the next day, in the meantime continuing the operation of the furnace in full blast, thereby subjecting the block, in its weakened condition, to the constant pressure from within the furnace which finally drove it out after the heat of the furnace had burned its end off, and had softened the mortar packing which had not been removed the night before. The water supply having failed, and no other means having been provided for keeping the block cool, the heat of the furnace burned its end off and necessarily tended to soften the mortar packing and weaken its resistance to the pressure from the furnace. Only the master could suspend the operation of the furnace, only the master could direct the removal of the block and fix the time for its removal, and only the master could postpone the removal of the block so that the removal and the repair of the brush could be done at the same time, and clearly the negligence which caused the injury to the plaintiff was the negligence of the master, and not of his fellow servants.

The suggestion of counsel for the defendant that the explosion was caused by the introduction of cold water into the block is not supported by any evidence. Manifestly the end of the block had been burned off some time before the accident, and, in the condition in which it was left, the steam could not have been so confined as to cause an explosion. Besides, the testimony of Gabriel Redmond, upon which defendant relies, shows that his attention was called by a fellow servant, two or three minutes before the accident, to the fact that the water was not running through the discharge pipe leading to the block, but Redmond did not attempt to remedy the fault which prevented its flow, because, as he testified: "If I had, I wouldn't be here now." It was then too late to cool the block and his refusal to attempt to restore the flow of water, under the circumstances, was not an act of negligence.

But it is further claimed that two of the fellow servants of the plaintiff, in using a wrench shortly before the accident, put a strain on the block which contributed to or caused the accident. Whatever was done immediately preceding the accident was done in the presence of and under the supervision and direction of the general superintendent, Thomas, and the evidence does not show that these fellow servants acted upon their own initiative; but, if it be assumed that they did, and that what they did was an act of negligence which in any manner contributed to the accident, then the injury to the plaintiff was caused by the joint or concurrent negligence of these servants and the master, and the master is liable. Railway v. Cummings, 106 U. S. 700, 27 L. Ed. 266; Deserant v. Railway Co., 178 U. S. 409, 20 Sup. Ct. 967, 44 L. Ed. 1127.

If the water supply had been restored in the morning, or the block taken out at 9 o'clock of that morning, the accident would not have occurred. The master, by delaying the repair of the water apparatus and the removal of the block at the appointed time (9 o'clock in the morning), created conditions of danger unknown to these servants, which they, in making the customary preparations for its removal at 12 o'clock, might add to unwittingly. The situation therefore required the supervision of the master which was given it by the general superintendent, who represented the master.

The motion for a new trial will therefore be overruled.

Digitized by Google

(155 Fed. 68.)

LOUISVILLE & N. R. CO. v. FISHER.

SCOTT v. LOUISVILLE & N. R. CO.

(Circuit Court of Appeals, Sixth Circuit. June 18, 1907.)

Nos. 1,628, 1,618.

1. REMOVAL OF CAUSES—NONRESIDENCE OF BOTH PARTIES—CONSENT.

A Circuit Court acquires jurisdiction of a suit by removal, although neither of the parties is a resident of the district, and the suit could not originally have been brought in that court, where the plaintiff fails to object in any way to such removal, and submits to trial on the merits.

[Ed. Note.—For cases in point, see Cent. Dig. vol. 42, Removal of Causes, § 203.]

2. CARRIERS—CARRIAGE OF PASSENGERS—PERFORMANCE OF CONTRACT.

A railroad company cannot be held answerable to a passenger in damages because of matters which are ordinary incidents of travel, such as exposure to drafts from windows opened by, or at request of, other passengers.

[Ed. Note.—For cases in point, see Cent. Dig. vol. 9, Carriers, § 1087.]

3. SAME—ACCOMMODATIONS DURING TRANSIT.

Plaintiffs purchased first-class tickets over defendant's railroad for passage between two points, and also tickets for a berth in a sleeping car between such points; such car being operated by another company and hauled under contract by defendant. At 3 o'clock in the morning, when some 45 miles from plaintiffs' point of destination, owing to a wreck beyond such point, the sleeping car was diverted and sent around over another road to its point of destination, and plaintiffs were required to transfer into a day coach for the remainder of their journey, which was made in about two hours. The car so provided was comparatively new and in good condition, and the only material complaint in regard to it was that it was filled with passengers, and the windows were kept open; the month being August, although the night was somewhat chilly. *Held*, that such facts did not establish a breach of the contract of carriage which rendered defendant liable in damages.

4. SAME—SLEEPING CAR COMPANY—CONTRACTS FOR ACCOMMODATIONS.

A sleeping car company which sells accommodations in its cars between points on a railroad to passengers of the railroad company, the cars being hauled by the railroad company in its trains under a contract between the two companies, is not liable to a passenger for breach of contract because the car in which such passenger is riding is diverted by the railroad company on account of a wreck and does not reach the passenger's point of destination, in consequence of which he is compelled to change into another car.

In Error to the Circuit Court of the United States for the Western District of Tennessee.

John B. Keeble and E. T. Seay, for railroad company.

K. D. McKellar, for Fisher.

J. L. McRee, for Pullman Co.

Before LURTON, SEVERENS, and RICHARDS, Circuit Judges.

LURTON, Circuit Judge. Mrs. Anna M. Baldwin, an aged lady, and her daughter, Mrs. George Y. Scott, bought at Memphis, Tenn., from the Louisville & Nashville Railroad Company, tickets entitling them to first-class transportation from Memphis, Tenn., to Bowling Green, Ky., by a train leaving at 1 p. m. August 9, 1902, and due to

Digitized by Google

arrive at Bowling Green about 5 o'clock a. m. They also bought from the agent of the Pullman Palace Car Company at Memphis one sleeping car ticket entitling them to the use of one sleeping berth as far as Bowling Green. The route of this sleeper was between Memphis and Cincinnati. About 3 o'clock a. m. of the following morning they were awakened by the Pullman conductor at or near Guthrie, Ky., and told that in consequence of a wreck north of Bowling Green the sleeper would be detoured at Guthrie and carried by way of Nortonville and over the Illinois Central Railway; thence into Louisville; and thence to Cincinnati over the Louisville & Nashville. They were also advised that they could by an ordinary coach go on to Bowling Green, which would enable them to reach their destination in about two hours. Plaintiffs were thereupon given seats in a day coach, and arrived at Bowling Green about on time. Upon the facts of the case, alleging a breach of contract, separate actions were brought by each against the railroad company and the Pullman Car Company. Pending the suit of Mrs. Baldwin, she died, and her action was revived by her administrator, and her declaration amended so as to charge that her death was due to her wrongful removal from the sleeper to the day coach. Both suits were submitted to the same jury, who found for Mrs. Baldwin's administrator for $2,500 against the railroad company and for the railroad company against Mrs. Scott. In both cases there was an instruction to find for the Pullman Company. The railroad company has sued out a writ of error in the one case, and Mrs. Scott in the other, and the cases have been heard together upon the same transcript.

A question of jurisdiction of the court below was suggested by the court growing out of the fact that the plaintiffs were citizens of the state of Mississippi, the Louisville & Nashville Railroad Company, a corporation of the state of Kentucky, and the Pullman Palace Car Company, a corporation of the state of Illinois. The suits were brought in the circuit court of Shelby county, Tenn., and removed into the Circuit Court of the United States for the Western District of Tennessee upon the application of the two defendant corporations solely upon diversity of citizenship. Thus the suits were not brought within either the district of the plaintiff or that of the defendants, and, not being a suit which might have been originally brought in the court to which it was removed, was not properly removable to that court from the state court. Ex parte Wisner, 203 U. S. 449, 27 Sup. Ct. 150.[1] But the defendant corporations might and did waive any objection which they might have made to being sued in a district of which neither they nor the plaintiff were inhabitants, by themselves removing the suits, and the plaintiff submitted to the jurisdiction thus invoked by failing to object in any way to such removal and by submitting to a trial upon the merits. This consent by both parties to the jurisdiction takes the case outside the authority of Ex parte Wisner, and brings it under Central Trust Co. v. McGeorge, 151 U. S. 129, 14 Sup. Ct. 286, 38 L. Ed. 98, which is recognized in the former case as an authority when both parties have submitted to a suit in the district of neither; federal jurisdiction otherwise appearing. Corwin Mfg. Co. v. Henrici Washer Co. (C. C.) 151 Fed. 938.

The question of the liability of the railroad company is the same in

[1] 51 L. Ed. 264.

Digitized by Google

each case, as the evidence was the same, and the ground of action identical. We consider the case of Mrs. Baldwin first.

In Tennessee, the statute provides that:

"Whenever the facts in the case entitle the plaintiff to sue for breach of contract, or at his election for a wrong or injury, he may join the statement of his cause of action in both forms or either." Shannon's Code Tenn., § 4439.

This is substantially what the defendant in error did, and while she states a contract, and sues for its breach, the gist of her action is the tort, the wrong and injury which arose out of the breach. The contract may in such cases be laid merely as the foundation of the duty which the defendant disregarded. Pouilin v. Canadian Pacific Ry. Co. (C. C.) 47 Fed. 858. Two distinct contracts are stated in the declaration, one with the railroad company, and the other with the Pullman Company. In one count there is the semblance of a statement of a joint contract, but the facts stated make it plain that the contract with each was distinct. The contract with the railroad company, as averred, is that it sold to the plaintiff "a full-rate ticket by which said railroad contracted to convey her in a first-class car all the way from Memphis to Bowling Green." The contract with the Pullman Company, as stated, is that she also bought a sleeping car ticket from its "agent at Memphis, paying full fare therefor, upon which ticket she was to receive sleeping car accommodations from Memphis to Bowling Green."

The court below instructed a verdict for the Pullman Company, and no writ of error has been sued out by Mrs. Baldwin's administrator against that company. We need not, therefore, consider its liability until we come to Mrs. Scott's writ of error to which it is a party. The only breach of the contract with the railroad company averred is in respect to the alleged failure of that company to carry her all the way to Bowling Green in a first-class car. That she was carried there is admitted, but it is averred she was removed from the sleeper in the nighttime and required to continue her journey in what is described as "an open car, in which were crowded men, women, and children, and in which all of the windows and doors were open." It is also said that:

"It seemed to have been an old car found somewhere along the company's line and for this supposed emergency, and was wholly different from the car in which the defendants had contracted to carry plaintiff to her destination."

It is then averred that the plaintiff was about 75 years of age, though she had enjoyed theretofore good health. That in consequence of exposure in this open car she contracted cold, and had been ill ever since. By the amended declaration it is charged that her death some 18 months afterwards was proximately caused by this "willful and wanton and unlawful conduct of the two defendants, in requiring her to change from a comfortable car in the manner stated to one where she was exposed as aforesaid and wholly unfit for the safety of herself." The evidence establishes that the train carrying the sleeper in which Mrs. Baldwin and Scott had secured sleeping accommodations was a train which ran between Memphis and Bowling Green. At the latter point the sleeper was taken by a train from New Orleans

Digitized by Google

and Nashville to Louisville and Cincinnati. In consequence of a wreck just beyond Bowling Green, it became necessary, in the opinion of the authorities, to detour this train at Guthrie, via Nortonville; thence, over the tracks of the Illinois Central Railroad, to Louisville. The sleeper contained quite a number of passengers for Louisville and points beyond. To accommodate the larger number, plaintiff and her daughter, whose destination was Bowling Green, were told of the situation and asked to take seats in the day coach, which would be sent through at once to that point. The distance was only some 45 or 50 miles, requiring a journey of something less than two hours. There was evidence that they were given an election to go around by Louisville in the sleeper, and thence back to Bowling Green by another train, or continue their journey with such accommodations as were obtainable under the conditions. It is not clear, however, that this was understood. We therefore lay this evidence aside, stopping only to observe that a journey to Louisville and then back to Bowling Green would have entailed something like 400 more miles of travel than to have gone direct to Bowling Green, and that it is not at all probable that these ladies would have for a moment agreed to such a circuitous route. It was undoubtedly inconvenient to be aroused from sleep at 3 o'clock in the morning and to change from a sleeper to a day coach, and it must be assumed that the change resulted in some comparative discomfort for the rest of the journey. But traveling is attended with more or less discomfort, and a temporary condition resulting from a wreck ahead compelled the carrier to either detour the only sleeper with the train, or procurable at the time, to accommodate the greater number, or to carry it on to Bowling Green for the accommodation of the two passengers destined to that point at the risk of greatly delaying and inconveniencing the greater number.

The question at last is whether the railroad company breached its contract by detouring this sleeper and thus necessitating a change into the day coach provided. We think not. The sleeper was the property of the Pullman Company, and was carried under a contract between that company and the railroad company. The Pullman Company sold sleeping accommodations to such persons as should be provided with railroad tickets. The railroad company neither sold nor received compensation for such accommodations, and its relation to the whole matter was under its contract with the Pullman Company, and no contract between Mrs. Baldwin and the railroad company is averred or implied, other than the contract to carry her in a first-class car to her destination. It was not therefore a breach of any agreement with Mrs. Baldwin to detour this sleeper under the conditions, provided she was given a seat in a safe and reasonably comfortable car, such a car as ordinarily furnished by well-managed railroad companies, to Bowling Green. There was hardly any dispute about the character of the car in which the plaintiffs finished their journey. The plaintiff, Mrs. Scott, described it in her evidence "as an open smoker," and that a "chill east wind was blowing through it." By "open" she meant that the windows were up. But she admits that she did not complain of this fact, and made no effort to have the windows put down, saying: "As a matter of course I could not control every

Digitized by Google

window in the car." The car was partitioned; one end being used as a smoker. But no smoking occurred while the plaintiffs used it. It was a comparatively new car, with comfortable upholstered seats. The substantial complaint is therefore limited to the fact that the windows in the car were up, or many of them, and the doors open; the car being a vestibuled car. The night had been very close and hot. Toward morning it grew chill; but it was an August night, and it would be somewhat unusual to find a car full of passengers who should, under such circumstances, unite in wishing all of the windows closed. The relation of a carrier to passengers is not that of an insurer. They must exercise a high degree of care in respect to all which concerns their safe transportation, but are only liable for negligence. When it comes to the mere incidents of their personal comfort or discomfort in the matter of open or closed windows, much must be left with the individual passenger. It would be a most unreasonable thing to hold a carrier answerable for the exposure of passengers to such drafts as are ordinarily an incident of travel. Passengers must be expected to exercise some judgment and discretion about the matter of open or closed windows and have some regard to the comfort of each other. Mrs. Scott understood this implied condition of travel, for she explains her failure to complain by saying: "I did not feel like I had the privilege of making every one in the car close their windows." This being one of the incidents, it is plain that the railroad company did not break its agreement to convey her in a first-class car by carrying her in one which had more or less of raised windows, especially as the plaintiffs gave the company no notice of special discomfort and no opportunity of locating them where they would be protected as far as possible, having due regard to the rights and comfort of others who might wish fresh air. See Edmunson v. Pullman Palace Car Co., 92 Fed. 824, 34 C. C. A. 382. Neither was there anything in the special circumstances which was likely to require any special attention. True, she was past 70, but she was veiled, and her age therefore not specially noticeable. She was accompanied by her daughter, Mrs. Scott, and the daughter testified that her mother was unusually active for her age and in good health.

The view we have taken of the case was presented to the court by one of the special requests presented by the railroad company, which was denied. That request was upon the plain and indisputable facts of the case applicable and should have been given. The thirteenth assignment of error is sustained for this reason. The request was in these words:

"Each of the plaintiffs alleges that she bought of the defendant, the Louisville & Nashville Railroad Company, 'a full-rate ticket, by which said railroad company contracted to convey her in a first-class car from Memphis, Tenn., to Bowling Green, Ky.' It is not alleged that the Louisville & Nashville Railroad Company agreed or obligated itself to furnish either plaintiff with any particular kind or make of car, or a sleeping car, or that it in any way became obligated to do so. If, therefore, you find that the said Louisville & Nashville Railroad Company furnished plaintiffs substantially a first-class car, then it has complied with its undertaking, and you will find for the defendant, the Louisville & Nashville Railroad Company."

Digitized by Google

The learned trial judge did, in substance, so instruct the jury; but he unfortunately coupled it with the condition that they should so find if the plaintiffs were given an option to go on with the sleeper to Louisville and then back to Bowling Green, or by the car which went direct to Bowling Green. It was immaterial, we think, whether such an option was or was not tendered, for passengers could hardly be concluded by declining a circuitous route of some 20 or 24 hours as against one of less that 2 hours in a coach such as they had a right to expect and require. In the view we take of the case it is not necessary to pass upon any of the other assignments.

We find no error of which Mrs. Scott can complain. The Pullman Company's implied contract was to afford Mrs. Scott sleeping accommodation in their sleeper to her destination, provided the railroad company would carry it. Duval v. Pullman Company, 62 Fed. 265, 10 C. C. A. 331, 33 L. R. A. 715. The Pullman Company did not detour it. That was the act of the railroad company, which, finding it could not be carried through by Bowling Green without great delay, undertook to carry it to its destination by a longer and different route, thereby serving the larger number. The utmost liability of the Pullman Company would be the difference between the schedule rate for sleeping car accommodations from Memphis to Guthrie and from Memphis to Bowling Green. The price of a ticket to each place was the same.

Judgment affirmed as to Mrs. Scott and reversed as to Mrs. Baldwin.

(155 Fed. 73.)

PAYNE v. ILLINOIS CENT. R. CO.

(Circuit Court of Appeals, Sixth Circuit. June 15, 1907.)

No. 1,627.

1. CARRIERS—PASSENGERS—TERMINATION OF RELATION.

A passenger on a railroad train alighted in the night at the town where he resided. The station, the town, and his home were all on the west side of the track, and the doors of the cars, which were vestibuled, were opened on that side. After his train had departed, he was killed by another train on a track to the eastward. *Held*, that he had ceased to be a passenger prior to his death, and the company at that time owed no duty to him as such.

[Ed. Note.—For cases in point, see Cent. Dig. vol. 9, Carriers, §§ 991–993.

Continuance of passenger relation, see note to Chesapeake & O. Ry. Co. v. King, 40 C. C. A. 437.]

2. DEATH—ACTION FOR WRONGFUL DEATH—QUESTIONS FOR JURY.

To justify the submission to the jury of a case brought to recover for the death of a person, alleged to have been caused by the negligence of defendant, there must be substantive proof not only of such negligence, but that it brought about the injury.

[Ed. Note.—For cases in point, see Cent. Dig. vol. 15, Death, § 141.]

3. SAME—DEATH OF PERSON ON RAILROAD TRACK—EVIDENCE OF NEGLIGENCE.

In an action for wrongful death, it was shown that deceased was a passenger on a vestibule train on defendant's railroad, and alighted therefrom at night at the town where he resided. The station, town, and the home of deceased were all on the west side of the track, and the

Digitized by Google

doors of the train were opened on that side. On a side track to the eastward of the main track, a freight train was standing waiting for the passenger train to pass. After the latter had gone, the freight started, but a coupling broke, and the cars were separated some 30 feet before the front portion stopped, standing across a private crossing. The conductor and a flagman went back to the caboose with a lantern for a knuckle, walking along the west side of the cars. After the front part of the train had been backed up and coupled, the conductor passed forward to the engine on the same side of the cars, when he discovered the body of the deceased lying near the private crossing, on its back, with the feet to the west, and the head on the west rail, where it had been crushed by the wheels evidently when the cars were backed. There were no other injuries, and the clothing was not disarranged. The side track at the place of the injury was being moved, and the earth had been removed from between the ties, and it was unlighted. *Held*, that such facts would not warrant a finding that the death was due to such condition of the track, where all the evidence tended to show that the case was one of suicide, and, in any event, that deceased was a trespasser and guilty of such contributory negligence as to preclude a recovery.

4. RAILROADS—OPERATION—STATUTORY REGULATIONS—TENNESSEE STATUTE.

Shannon's Code Tenn. § 1574, subsec. 4, which requires every railroad company to keep some person on the locomotive always on the lookout ahead and to sound the whistle, apply the brakes, and employ every means to stop the train when any person, animal, or other obstruction appears upon the road, does not apply to a train which became uncoupled on a side track in depot grounds and was backing up to recouple.

[Ed. Note.—For cases in point, see Cent. Dig. vol. 41, Railroads, § 747.]

In Error to the Circuit Court of the United States for the Western District of Tennessee.

K. D. McKellar, for plaintiff in error.

Charles N. Burch, for defendant in error.

Before LURTON, SEVERENS, and RICHARDS, Circuit Judges.

RICHARDS, Circuit Judge. This action was brought by the plaintiff to recover for the wrongful death of her husband, George Payne, who was run over and killed on the night of February 2, 1904, by a portion of a freight train of the Illinois Central Railroad Company, in the depot grounds at Dyersburg, Tenn. Payne lived in Dyersburg. Between 10 and 11 o'clock that night he arrived there from Paducah, Ky., on a vestibuled passenger train. A short time afterwards he was found dead on the side or passing track, then in use by a freight train bound north, which had been waiting for the south-bound passenger train, and was expecting to leave as soon as it arrived. Payne was killed by one of the portions of this freight train while being coupled together. The question raised below, and the only one in the case, is whether the proofs presented a case for recovery. The defendant submitted that no negligence on its part causing the accident was shown. This the court held and directed a verdict for the railroad company. Was the court correct in so holding?

The passenger train which Payne took reached Dyersburg between 10 and 11 o'clock that night. He was seen on the train, but no one observed him leave it. The train was vestibuled, and was going south. After the usual custom, the vestibules were opened on the west side. The station was located on the west side of the main track, and

Digitized by Google

so was the town and the home of the deceased. Payne was well acquainted with the town, had lived there for 18 years, was accustomed to railroad travel, and there was no occasion, so far as any one knew, for him to leave the train, except in the usual way, on the west side. When Payne arrived at the depot in Dyersburg that night, there was in the depot grounds, in addition to the main track, a side or passing track which lay to the east of the main track. Later the main track and the passing track were made into a double track. At the time of the accident there was a cut-off or switch connecting these two tracks, which was in process of removal; the gravel and dirt being taken out from between the ties.

The depot at Dyersburg was located between two crossings; the one on the south being a public crossing, and the one on the north a private crossing, used by persons having freight business with the railroad company. At the time the south-bound passenger train arrived at Dyersburg, a north-bound freight train was standing on the side or passing track, waiting for the passenger train to get out of the way. This freight train pulled into Dyersburg from the south at about 8 o'clock. It consisted of 28 or 30 freight cars. After its arrival, it was cut in two, leaving the rear cars south of the public crossing and the front cars (about 20 of them) north of it. This was done to permit the use of the public crossing. The private crossing to the north remained blocked by the cars which composed the front end of the freight train. Before the passenger train arrived, however, the front end of the freight had been backed and coupled to the rear cars, so the freight train was ready to pull out when the passenger train should leave. The freight train did not, however, start north until the passenger train left. When it started north, it had gone only about 30 feet, when, by the breaking of a knuckle, it became uncoupled and parted about five or six car lengths south of the private crossing. The train being equipped with air brakes, which operated automatically, the rear cars were separated from the front not more than 30 feet. When the conductor discovered that the train had parted, he went back to the caboose for a knuckle. To get there he went along the west side of the passing track. He had his lantern and went by the point where Payne's body was subsequently found. So did the flagman, but neither saw a body. After securing a new knuckle in the caboose, the signal was given to the engineer to back. The cars composing the front end of the train were run slowly over the intervening space and the coupling effected. The conductor then proceeded north on foot to get to the engine and discovered Payne's body on the track, about two feet south of the private crossing. He had, in all probability, been run over when the front end of the train was backing in order to couple to the cars in the rear. The body was lying on the back, the head on the west rail of the east or passing track, and the body perpendicular to that track, stretching out toward the main track; the right hand was alongside the head, and was nearly severed, while the left hand was straight down alongside the body. The clothes were clean, there was no indication that the body had been rolled or dragged. The wheel had apparently passed over the mouth, and the lower part of the face was mashed to a pulp. There were no other injuries.

Digitized by Google

The negligence charged against the railroad company was: First, in negligently killing Payne when he was still a passenger, and when the company was under obligation to exercise a very high degree of care towards him; second, in negligently leaving a portion of the passing track, where the cut-off switch was located, unguarded and unlighted, when in a torn-up condition; and, third, in not taking the statutory precautions required by the law of Tennessee, when Payne was encountered as an obstacle on the track.

With respect to the first claim, it may be observed that the depot and the town were both on the west side of the track. The vestibules of the coaches were opened for passengers to alight on that side. The presumption is that Payne alighted on that side, and there is no evidence to the contrary. After thus alighting from the train, with a straight and unimpeded way into the town, and to his home, Payne ceased to be a passenger. No reason is given in the testimony, no explanation is offered, which would justify him either in alighting on the east side of the vestibuled train, or in crossing the west track and attempting to cross the passing track. When he was run over and killed on the passing track, his own train had pulled out and gone south, and his relation to it as passenger had long ceased.

The claim that the company was negligent in leaving the torn-up, cut-off track unlighted and unguarded is based, of course, upon the supposition that Payne stumbled and fell because of that condition, and was caught and run over by the freight train. This is pure conjecture. There is no proof whatever tending to support it; and there must be substantive proof not only that the defendant was negligent, but that the negligence brought about the injury, in order to justify the submission of the case to the jury. Looney v. Metropolitan R. R. Co., 200 U. S. 480, 26 Sup. Ct. 303, 50 L. Ed. 564; Carnegie Steel Co. v. Byers, 82 C. C. A. 115, 149 Fed. 667, 8 L. R. A. (N. S.) 677; Moit v. Ill. Central R. R. Co., 153 Fed. 354, 82 C. C. A. 430.

The theory that Payne stumbled in the dark because of the torn-up track, and fell under the freight train, is not only without any support in the evidence, but refuted by it. The position of the body, the nature of the injuries, and the condition of his clothes, all indicate conclusively that he was not run down or dragged; but that he deliberately lay down with his head on the track. Payne had been a saloonist for many years and had lost his job by Dyersburg "going dry" the preceding summer. He had been suffering from the grip and was out of employment. He had been on an unsuccessful hunt for a job, and while away from home had talked and acted in a peculiar manner. He was identified by his cuffs, which were in his overcoat pocket. He had taken the precaution to write his name in pencil on them. The court cannot permit a jury to guess that in some way or other the death of a person was brought about by negligence, when the evidence all points to suicide. Payne never stumbled over the torn-up, cut-off track. He never started to cross it. He had no reason to and no design. The crossing there was private. It was blocked. His purpose ended with the nearest rail and the crushing wheels soon to pass over it.

The final point made by the plaintiff was that the railroad company omitted the statutory precautions it should have taken. But no stat-

Digitized by Google

utory precautions were demanded under the circumstances. Subsection 4 of section 1574, Shannon's Code, provides as follows:

"Every railroad company shall keep the engineer, fireman or some other person upon the locomotive always upon the lookout ahead; and when any person, animal or other obstruction appears upon the road the alarm whistle shall be sounded, the brakes put down and every possible means employed to stop the train and prevent an accident."

Our understanding is that the statute does not apply, and the precautions are not required, where the train is being made up in the depot grounds, as this one was. The movement which injured Payne was the slow backing movement preliminary to the final coupling up of the separated portions of the train. Cox v. L. & N. R. R. Co., 1 Shannon, Tenn. Cases, 475; Rogers v. R. R. Co., 136 Fed. 573, 69 C. C. A. 321; R. R. Co. v. Pugh, 95 Tenn. 419, 32 S. W. 311.

But if Payne did not deliberately lie down upon the track, he was guilty of such negligence in attempting to cross the passing track when blocked and in use by a freight train then being made up, as to plainly preclude a recovery. Under the circumstances, he was an intruder and trespasser. Besides, Payne was in a part of the station grounds where a passenger had no right to be, and the railroad company owed him no duty of precaution, unless his presence in that place was known to its employés, and this is not claimed.

Judgment affirmed.

(155 Fed. 77.)

LIMA LOCOMOTIVE & MACHINE CO. v. NATIONAL STEEL CASTINGS CO.

(Circuit Court of Appeals, Sixth Circuit. July 17, 1907.)

No. 1,652.

1. CONTRACTS—MUTUALITY.

Where plaintiff accepted defendant's proposition to furnish all plaintiff's requirements in steel castings for the remainder of the year, at prices mentioned, defendant was obligated to take from plaintiff all castings which their business should require, and the contract was therefore not void for want of mutuality.

[Ed. Note.—For cases in point, see Cent. Dig. vol. 11, Contracts, § 32.]

2. CUSTOMS AND USAGES—WRITTEN CONTRACT—EXPLANATION—CONTRADICTION

While evidence of custom and usage is admissible to explain the meaning of words and phrases used in a written contract and to annex thereto certain incidents which circumstances indicate the parties intended, when the words used do not necessarily exclude the operation of such custom or usage, evidence thereof is inadmissible to contradict the contract.

[Ed. Note.—For cases in point, see Cent. Dig. vol. 15, Customs and Usages, § 34.]

3. CONTRACTS—PERFORMANCE—EXCUSE.

Nothing will excuse the performance of a contract, except an act of God or the public enemy.

[Ed. Note.—For cases in point, see Cent. Dig. vol. 11, Contracts, §§ 1409-1417.]

4. CUSTOMS AND USAGES — NONPERFORMANCE OF CONTRACT — ACCIDENT — UNAVOIDABLE DELAY.

Where plaintiff had knowledge that its furnace was working badly, and that normal results could not be relied on, at the time it contracted to

Digitized by Google

supply defendant's requirements of steel castings for the remainder of the year, the subsequent necessity to shut down its plant for repairs was not an "accident" or an unavoidable cause of delay, within a custom or usage among manufacturers of steel castings that all contracts are subject to the contingency of accidents and unavoidable delays.

5. CONTRACTS—DISCHARGE BY BREACH.

Plaintiff having contracted in April, 1902, to furnish defendant's requirements of steel castings for the remainder of the year, furnished the same until August 1st, when, because of the necessity of repairs, it was compelled to close its plant until November 19th, during which time defendant was compelled to withdraw its patterns from plaintiff and place them with other founders, having made arrangements on the best obtainable terms to obtain what plaintiff was unable to furnish. *Held*, that defendant was not bound to cancel such new contracts and return its patterns to plaintiff on notice given in October that plaintiff's plant would be in operation, ready to turn out work under the contract on or before November 19th.

In Error to the Circuit Court of the United States for the Western Division of the Northern District of Ohio.

Action upon account for goods sold and delivered, and cross-action for damages for breach of contract. Jury waived. The trial judge made a finding of facts and a general finding for the plaintiff for the full amount of the account and against the defendant upon its cross-petition.

On April 10, 1902, the National Steel Castings Company made in writing the following proposition to the Lima Locomotive & Machine Company: "Gentlemen: We make the following proposition for furnishing all your requirements in steel castings for the remainder of the present year at the prices mentioned below, f. o. b. cars at Montpelier, the terms to be thirty days net. You agree to furnish us on or before the 15th of each month the tonnage that you wish to order during the following month. We agree to fill your orders as specified to the amount of this tonnage, and to make such deliveries as you require." Then followed a schedule of steel castings and prices per pound. This was accepted in writing by indorsing thereon, at the foot of the proposition, "Accepted April 10, 1902," and duly signed by the Lima Company. This contract the defendant set out in its cross-petition and averred: First, that the castings for which the plaintiff had sued were ordered and supplied under this contract; second, that the plaintiff had failed and refused, though requested, to supply it with other castings necessary to meet the requirements of its business, and that defendant in consequence had been obliged to contract for same with other founders and had paid for the castings so procured $5,498.24 over and above the contract price with plaintiff.

The defenses to the cross-petition were: First, that the contract was void for want of mutuality; second, that the furnace of the plaintiff broke down through an "unavoidable accident," and the plant closed for repairs from about August 1 to November 19, 1902, and that for this reason the plaintiff was excused from carrying out its agreement, if valid, during that time, and that there was an universal custom among manufacturers of steel castings, well known to defendant, that all contracts were subject to the contingency of strikes, accidents, and unavoidable delays, and that this contract was entered into with reference to this custom; third, that notice was given the defendant that the furnace of the plaintiff would resume operation about November 19th, but defendant did not furnish plaintiff with patterns by which it might have supplied defendant's November and December requirements.

Henry W. Seney, for plaintiff in error.

Lloyd Williams, for defendant in error.

Before LURTON, SEVERENS, and RICHARDS, Circuit Judges.

After making the foregoing statement of the case, LURTON, Circuit Judge, delivered the opinion of the court.

Digitized by Google

1. We find ourselves unable to agree with the learned circuit judge in respect to the nonmutuality of the contract by which the plaintiff agreed to supply all of the "requirements" of the defendant's business for the remainder of the year 1902. The defendant was engaged in an established manufacturing business which required a large amount of steel castings. This was well known to the plaintiff, and the proposition made and accepted was made with reference to the "requirements" of that well-established business. The plaintiffs were not proposing to make castings beyond the current requirements of that business, and would not have been obligated to supply castings not required in the usual course of that business. By the acceptance of the plaintiff's proposal, the defendant was obligated to take from the plaintiff all castings which their business should require. The contract, if capable of two equally reasonable interpretations, should be given that interpretation which will tend to support it and thus carry out the presumed intent of both parties. The second and third paragraphs must be read in the light of the first. Thus read, there is no ground for doubting that the words the "tonnage you wish to order," and "such deliveries as you may require," have reference to the established "requirements" of the business for the following "month," and the deliveries of the tonnage thus estimated. The contract falls under and is governed by the case of Loudenback Fertilizer Co. v. Tennessee Phosphate Co., 121 Fed. 298, 58 C. C. A. 220, 61 L. R. A. 402, where the contract was to sell to a manufacturer of fertilizer "its entire consumption of phosphate rock" for a term of five years. In that case we held that the contract was mutual, and the buyer under obligation to take its entire requirement of phosphate rock from the seller. Concerning the definiteness of such a contract, we said:

"A contract to buy all that one shall require for one's own use in a particular manufacturing business is a very different thing from a promise to buy all that one may desire, or all that one may order. The promise to take all that one can consume would be broken by buying from another, and it is this obligation to take the entire supply of an established business which saves the mutual character of the promise."

To the same effect and directly in point are the cases of Cold Blast Transp. Co. v. Kansas City Bolt & Nut Co., 114 Fed. 77, 52 C. C. A. 25, 57 L. R. A. 696, Minnesota Lumber Co. v. Whitebreast Coal Co., 160 Ill. 85, 43 N. E. 774, 31 L. R. A. 529, and Wells v. Alexandre, 130 N. Y. 642, 29 N. E. 142, 15 L. R. A. 218.

2. Among the findings of fact was the following:

"(19) Throughout the United States it is a custom among manufacturers of steel castings, such as were to be manufactured for defendant by plaintiff, to make all agreements contingent upon strikes, accidents, and other unavoidable delays, and all contracts for the manufacture of such castings were made with reference to and conditioned upon such custom, which said custom was well known to defendant when said agreement was entered into, and was made with reference to said custom."

The court also found that the contract itself was contained upon the printed letter head of the plaintiff, which, among other things, had printed thereon these words: "All agreements contingent upon strikes, accidents and other unavoidable delays, beyond our control."

Digitized by Google

Nothing is better settled than that it is not admissible to contradict a contract by evidence of custom or usage, but admissible to explain the meaning of words and phrases used and to annex to such contracts certain incidents which circumstances indicate the parties intended to annex when the words they have used do not necessarily exclude the operation of such custom or usage. Lillard v. Kentucky Distilleries & Warehouse Co., 134 Fed. 168, 174, 67 C. C. A. 74.

That nothing will excuse the performance of a contract except an act of God or the public enemy is equally clear. Whether the plain agreement to supply the defendant with all the castings which its business should require is not contradicted by a custom or usage which would excuse the performance upon the contingency of a strike or accident is a very grave question, and one which we pretermit because we do not find that the plaintiff was prevented from performing its contract by the occurrence of any accident or other contingency included by the alleged custom or usage in the steel casting business. It is true that the plaintiff's furnace was shut down from August 1st to November 15th for the purpose of making necessary repairs. But the facts found show that the want of repair which necessitated going out of blast for repairs August 1st was a condition which existed at the time this contract was executed, and had existed for some months before. The output had been severally affected for months by a defective operation, the cause of which was not understood. Various efforts were made to remedy the matter, but without results. In this existing crippled condition plaintiff entered into the contract here involved and continued to operate until some time in June, matters growing worse, when notice was given of a shutdown August 1st to overhaul and repair. It was after the work of overhauling had begun that the cause of the bad draught which had troubled the operation was discovered and remedied. The "accident" or "unavoidable delay" excused by custom or usage must be confined to accidents and delays due to causes originating after the contract. Plaintiff knew when it made this contract that its furnace was working badly, and that normal results could not be relied upon. They did not then know the cause of the trouble, but that the trouble was more vital than they then suspected and would take longer to remedy is a misfortune that cannot be cast upon the defendant as an "accident" excused by custom or usage.

3. The "requirements" for defendant's business for November and December were in excess of requirements of preceding months. The defendant in error says that on October 24th it gave plaintiff in error notice that on or before November 19th its furnace would be in running order, and that if furnished patterns they could put them in sand and be ready to turn out work on or before that day. The facts found show that the castings required were made upon patterns supplied by defendant, and that when plaintiff shut down these patterns were necessarily returned and placed with other founders, and so were in the hands of other contractors. When this notice was given, defendant notified plaintiff that it had been forced to make arrangements with other founders for its requirements for the remainder of the year, and that its patterns were in the possession of such other contractors, to whom orders had been given. The court below found as a fact that from April 1st to the close of the year the prices of such

Digitized by Google

castings advanced materially, and that it was difficult to get orders filled, and that the contracts made by defendants were for the best prices obtainable. The plaintiff, having inexcusably breached its agreement, is not in a situation to complain of the measures resorted to in good faith by the defendant to supply itself with the castings which the plaintiff was under obligation to furnish. It may be that some of defendant's outstanding contracts for November and December "requirements" might have been canceled and the patterns returned to plaintiff; but it was not bound to do so under the circumstances. The market was an advancing one, and defendant made arrangements on best obtainable terms to obtain what plaintiff was unable to furnish, and this is all the plaintiff had a right to ask. Upon the facts found the judgment should have been for defendant for $5,498.24, less $3,700.78, with interest on this balance from January 1, 1903, and the costs of this suit.

Judgment reversed, with directions to enter judgment in accordance with this opinion.

(155 Fed. 1.)

NELSON et al. v. MEEHAN et al.

(Circuit Court of Appeals, Ninth Circuit. June 7, 1907.)

No. 1,876.

1. APPEAL AND ERROR—APPEALABLE ORDER—ALASKA CODES.

An order made by a district court of Alaska setting aside a prior judgment of such court and granting a new trial is not appealable under Alaska Codes, pt. 4, c. 51, § 504, which gives the right of appeal from a "final judgment or order," but such order may be reviewed on appeal by the Circuit Court of Appeals for want of jurisdiction in the court to make it.

[Ed. Note.—Finality of judgments and decrees for purposes of review, see note to Brush Electric Co. v. Electric Imp. Co. of San Jose, 2 C. C. A. 379; Central Trust Co. of New York v. Madden, 17 C. C. A. 238; Prescott & A. C. Ry. Co. v. Atchison, T. & S. F. R. Co., 28 C. C. A. 482.]

2. JUDGMENT—VACATION FOR FRAUD—POWER OF COURT AFTER TERM.

A court of equity has power to vacate its own decree at any time during the term at which it was entered on the ground that it was procured by means of the perjured testimony of the prevailing party, notwithstanding the fact that it has been affirmed on appeal; but in the absence of a statute conferring it, such power does not extend beyond the term. In such case, fraud to confer jurisdiction must consist in something extrinsic or outside of the matter which was actually tried or so in issue that it could have been tried in the suit in which the decree assailed was entered.

[Ed. Note.—For cases in point, see Cent. Dig. vol. 30, Judgment, §§ 666–668.]

3. SAME—ALASKA STATUTE.

Alaska Code Civ. Proc. § 93, which authorizes a district court to relieve a party from a judgment taken against him through his mistake, inadvertence, surprise, or excusable neglect, does not confer power to vacate a judgment after the term on the ground that the issues were erroneously decided because of perjured testimony, the motion being based on affidavits going to the identical issues tried before.

Appeal from the District Court of the United States for the Third Division of the Territory of Alaska.

Miller, West & De Journel, N. V. Harlan, and West, De Journel & O'Neill, for appellants.

John L. McGinn, Martin L. Sullivan, McGinn & Sullivan, J. C. Campbell, W. H. Metson, F. C. Drew, and F. P. Deering, for appellees.

Digitized by Google

Before GILBERT and ROSS, Circuit Judges, and HUNT, District Judge.

HUNT, District Judge. O. A. Nelson and G. N. Hensley brought an action against Matt Meehan and T. Larson in December, 1903, in the United States District Court for the territory of Alaska, to compel the specific performance of a contract by which Meehan and Larson agreed to give to the plaintiffs a one-half interest in a certain mining claim if the plaintiffs would sink thereon three holes to bed rock. The cause was tried by the court, and it was found that the plaintiffs had fulfilled the terms of the contract by sinking three holes to bed rock, and that as a conclusion they were entitled to have conveyed to them by the defendants the half interest specified in the contract. Thereafter, and on August 17, 1904, a decree was entered in favor of the plaintiffs in accordance with the findings of the court. Defendants moved for a new trial upon the grounds of insufficiency of evidence to justify the decision and errors of law duly excepted to upon the trial. This motion was overruled upon August 17, 1904. The defendants appealed to this court, and upon May 8, 1905, the decree of the District Court was affirmed. Meehan v. Nelson, 137 Fed. 731, 70 C. C. A. 165. The mandate of the Circuit Court of Appeals was filed in the District Court of the proper district in Alaska on June 13, 1905; thereafter, on July 26, 1905, the defendants filed in the District Court a motion for an order vacating and setting aside the judgment and decree theretofore rendered by the District Court on August 17, 1904, which had been affirmed by this court, as heretofore stated. This motion was based upon the ground that the judgment and decree of the court had been founded upon the testimony of O. A. Nelson, one of the plaintiffs in the cause, and that he had willfully and corruptly sworn falsely by stating that he had sunk the three holes to bed rock and performed the conditions of the agreement which was made the basis of the suit in specific performance, that the court had been deceived, and that appellees did not discover the true condition of affairs until after the affirmance of the decree of the lower court by the Court of Appeals. The defendants accompanied their motion to vacate with a number of affidavits wherein affiants swore that hole No. 3 sunk by Nelson and Hensley did not go to bed rock as required by the terms of the agreement heretofore referred to, and that the gravel under the bottom of the No. 3 shaft to bed rock had never been removed. On July 29, 1905, the plaintiffs appeared specially and only for the purpose of objecting to the jurisdiction of the court to entertain or pass upon the motion filed by the defendants. On August 14, 1905, the court overruled the objections to the jurisdiction of the court to entertain the motion. After the court overruled plaintiffs' objections to the jurisdiction of the court, plaintiffs, meeting the issue made by the affidavits of defendants, filed a number of counter affidavits tending to show that the holes had been sunk to bed rock, and that after a winter has elapsed since ground has been disturbed it is very difficult to tell by looking at gravel in a drift which is gravel in place and which is gravel that has been disturbed or caved in; that a shaft generally caves in, and that during

Digitized by Google

the winter following this process of caving the whole mass freezes and forms a compact cohesive body which it is almost impossible to distinguish from gravel in place. After the submission of these affidavits by both sides, and with the consent of the parties to the litigation, the presiding judge made a personal inspection of the property, and it was his opinion that the Nelson and Hensley shaft No. 3 was not sunk to bed rock, that its lowest point was at least 5 feet 6 inches from bed rock, and that Nelson had deliberately committed perjury upon the trial of the case. The court, therefore, on September 16, 1905, ordered that the judgment and decree entered upon August 17, 1904, be set aside, and that the defendants be granted a new trial. The plaintiffs now prosecute this appeal from the order of the District Court so made and entered.

Questions of jurisdiction are presented by appellants and respondents. Appellants contend that there was no jurisdiction in the lower court to set aside and vacate the decree made in favor of Nelson and Hensley and to grant a new trial, inasmuch as it appears that the matters presented in the Meehan and Larson motion to vacate the decree and to grant a new trial are the identical questions that were tried and decided in the former suit hereinbefore referred to; hence that it was not within the power of the lower court, after the expiration of the term in which the decree was rendered, to vacate its decree merely because it was founded upon perjured testimony. On the other hand, the respondents challenge the jurisdiction of this court by a motion to dismiss the appeal, for the reason that the judgment or decree of the lower court vacating the former decree and granting a new trial is not a final judgment or decree from which an appeal may be taken under section 504, pt. 4, c. 51, of the Codes of Alaska. Section 504 of the Alaska Codes, so far as applicable, provides that an appeal and writ of error may be taken and prosecuted from a final judgment or order of the District Court of Alaska to the United States Circuit Court of Appeals for the Ninth Circuit where the value of the subject-matter exceeds $500. A judgment is defined by the Codes of Alaska (section 234, Carter's Annotated Codes) as "the final determination of the rights of the parties in the action." In Bostwick v. Brinkerhoff, 106 U. S. 3, 1 Sup. Ct. 15, 27 L. Ed. 73, the Supreme Court said that a judgment or decree, to be final within the meaning of the acts of Congress giving to the Supreme Court jurisdiction on appeals and writs of error, "must terminate the litigation between the parties on the merits of the case, so that if there should be an affirmance here the court below would have nothing to do but execute the judgment or decree it had already rendered." An order granting a new trial continues a case for further proceedings; it does not finally determine the rights of the parties, but suspends the finality of the original judgment entered until the issues are tried and decided anew. Black on Judgments, § 34. These definitions of what constitutes a final judgment that may be appealed from exclude an order vacating a judgment and granting a new trial made in the same cause. It therefore follows that our inquiry must be limited to the question whether or not the District Court had power to make the order it did. If it had that power, whether it was wisely or unwisely exercised, is not for us to decide,

Digitized by Google

and respondents' motion to dismiss the appeal for lack of jurisdiction of this court would have to be sustained. If, conversely, the court acted in excess of its authority when it made the order appealed from, this court has jurisdiction of the appeal; and plaintiffs' objections to the jurisdiction of the lower court are sound.

This being a suit in equity, the District Court had full power to amend, correct, or vacate its decree at the same term in which it was made, if it was discovered that error had been committed or that fraud had been perpetrated upon the court by either of the parties or their agents, or if for other satisfactory reason the court in its discretion believed that it was just that the decree should be vacated or amended or reformed. Doss v. Tyack et al., 14 How. 297, 14 L. Ed. 428. Control of the court over its own judgments during the term at which they are rendered is spoken of by Justice Miller as of "everyday practice." Bassett and Harger v. United States, 9 Wall. 38, 19 L. Ed. 548. And later the same learned justice, speaking for the court in Bronson v. Schulten, 104 U. S. 410, 26 L. Ed. 997, said:

> "It is a general rule of the law that all the judgments, decrees, or other orders of the courts, however exclusive in their character, are under the control of the court which pronounces them during the term at which they are rendered or entered of record, and they may then be set aside, vacated, modified, or annulled by that court."

The fact that an appeal was taken and that the decree was here affirmed did not necessarily take away the power of the lower court to vacate the decree during the term, if a fraud had been practiced. When the mandate of this court was filed affirming the decree the suit was again in the District Court. The rule is that a lower court is bound by the decree of the appellate court, and its duty is to put the decree into effect according to the mandate, and there is no authority to give further relief. But if during the term there is a showing, whether by motion or otherwise, of fraud or other wrong practiced by the prevailing party, the lower court has power to vacate a decree and grant a new trial notwithstanding an affirmance by a higher court. This would seem to be so because, so long as the term of court lasts in which the decree was made and entered, the decree remains subject to the judicial power of the court; and if during such term it is annulled, such annulment vacates what has been done, and the decree stands as if no appeal had been had. In Goddard v. Ordway, 101 U. S. 745, 25 L. Ed. 1040, an order allowing an appeal was granted and entered on the minutes of the court, and subsequently, during the term, this order was set aside and vacated at the instance of the party in whose favor the appeal had been granted. The Chief Justice, speaking for the court, said:

> "We are unable to see how the allowance of an appeal differs in this respect from any other judicial order made in the cause. If the one is subject to revocation or amendment while the term continues, so, as it seems to us, must be the other." Ex parte Fuller, 182 U. S. 562, 21 Sup. Ct. 871, 45 L. Ed. 1230.

This brings us to the point where we must ascertain whether the order vacating the decree was made during the term at which the decree was rendered. Counsel for appellants have predicated assign-

Digitized by Google

ments of error upon the ground that the defendants' motion to vacate was not filed until after the commencement of a term of a court succeeding the one whereat the decree was made. Their brief, too, is prepared upon an assumption that such was the fact. Respondents' counsel, however, address our attention to the omission of the record to sustain the statement that the term at which the decree was rendered had closed. The transcript in the original appealed case shows that the trial was had in August, 1904, at a special term of the District Court held at Fairbanks, but there is nothing in that record that indicates an adjournment of such special term; while the record on this appeal shows affirmatively that at different times in April, 1905, the parties were before the court in the matter of a receivership asked for by plaintiffs. The only evidence of when there was any adjournment of court for the term is found in an order made by the judge at Fairbanks on August 4, 1906, wherein nunc pro tunc he extended the time for the plaintiffs to prepare and have signed their bill of exceptions to the order vacating the decree, in which order it is recited that "the final order in setting aside the judgment in the above-entitled cause was not made and signed until the sixteenth day of September, 1905; that the court adjourned sine die on the same day, and that the judge of said court left the Third division of the territory of Alaska immediately thereafter," etc. This is evidence of the adjournment of the term after the court had vacated the decree, but it in no way sheds light upon what term was so adjourned. Inasmuch as the District Courts of Alaska are courts of general jurisdiction, our determination of the point must be guided by those usual rules which, in the absence of a showing to the contrary, presume that courts have proceeded within the general scope of their powers, and that their orders and judgments have been given with authority. Fowler v. Equitable Trust Co., 141 U. S. 384, 12 Sup. Ct. 1, 35 L. Ed. 786; Stockslager v. United States, 116 Fed. 590, 54 C. C. A. 46. Resting our decision, therefore, upon the ground that the court had jurisdiction during the term at which it made the decree in specific performance to vacate the same, and that its order of vacation was presumably made during the same term, defendants' motion to dismiss the appeal for the reason that it is not an appealable order is sustained.

If the record had disclosed that the motion to set aside the decree and the action of the court vacating the same and granting a new trial were had at a term subsequent to the special term whereat the cause was heard, our conclusion would have been that the court exceeded its authority, and that the proper order would be to remand the case with directions to set aside the order vacating the decree and granting a new trial, to dismiss the defendants' motion to vacate, and to enforce the original decree of specific performance. We express this opinion now because it may be that appellants' positive statement in their assignment of errors and brief to the effect that the motion to vacate was made and action thereon were had at a subsequent term and their assumption that such is the truth will be proved by indisputable record facts, and because the briefs discuss the case from such a standpoint, and because if plaintiffs are correct in their assumption it is to the interest of all parties that the litigation should

Digitized by Google

be ended without another appeal. Our reasons for believing that defendants would not be entitled to the relief sought at a subsequent term of the court are briefly these: As we have shown, the rule is that during the term at which a decree is rendered the court which pronounces it may vacate or annul it or amend or modify or reform it. But the power of a court of equity to vacate or annul its own judgment or decree does not extend beyond the term at which the decree was pronounced. Cameron v. McRoberts, 3 Wheat. 591, 4 L. Ed. 467. There is a practice in some states whereby a judgment may be vacated after the term for perjury by the successful party, but generally, if not always, this is under authority to be found in some statutory provision which has expressly conferred ample yet prescribed control over the judgment or decree of the court whereby it may be so vacated. Nebraska has such a statute (section 602, Code of Civil Procedure); so has Washington (section 5153, Ballinger's Ann. Codes & St.). Bronson v. Schulten, 104 U. S. 410, 26 L. Ed. 997. The statute of Alaska, as we shall see, contains no such provision. Bills of review or proceedings analogous to bills of review may also be brought to vacate decrees for fraud or collusion or lack of jurisdiction, but they also are exceptions based upon the principle that a judgment or decree may be vacated after the term in cases where the cause relied on to set it aside affects the validity of the judgment. Ex parte Sibbald v. United States, 12 Pet. 488, 9 L. Ed. 1167. Doubtless a motion upon notice may be regarded as good practice.

It has been earnestly insisted by counsel for the appellees that the District Court had an inherent power to vacate the decree even after the term had expired, because the fraud in the judgment vacated rested upon the perjured testimony of the prevailing party, and upon such perjured testimony alone. But we believe that the great weight of authority is against this contention, and that the acts for which a court of equity will on account of fraud annul a judgment or decree between the same parties after the term has ended have relation to frauds extrinsic or collateral to the matter tried, and not to a fraud in the matter on which the decree was rendered. The leading case of United States v. Throckmorton, 98 U. S. 61, 25 L. Ed. 93, establishes this precise doctrine. After a careful review of the authorities, English and American, Justice Miller used this language:

> "That the mischief of retrying every case in which the judgment or decree rendered on false testimony given by perjured witnesses, or on contracts or documents whose genuineness or validity was in issue and which are afterwards ascertained to be forged or fraudulent, would be greater, by reason of the endless nature of the strife than any compensation arising from doing justice in individual cases."

In Vance v. Burbank, 101 U. S. 514, 25 L. Ed. 929, Chief Justice Waite cited the Throckmorton Case, saying that it had been settled that the fraud in respect to which relief will be granted where a decree is sought to be set aside after the decisions of a judicial tribunal must be such as has been practiced upon the unsuccessful party and prevented him from exhibiting his case fully, and that false testimony or forged documents even are not enough, if the disputed matter has actually been presented to or considered by the appropriate tribunal. More than 12

Digitized by Google

years after the Throckmorton Case and Vance v. Burbank, supra, the Supreme Court, in 1891, decided Marshall v. Holmes, 141 U. S. 589, 12 Sup. Ct. 62, 35 L. Ed. 870, which is not infrequently relied upon as modifying the doctrine of the two earlier cases cited. Evidently the court itself did not intend the decision to be a modification, inasmuch as the opinion refers to the Throckmorton Case to sustain the rule that while generally a defense cannot be set up in equity which has been fully and fairly tried at law, still equity will regard an application to grant relief against a judgment which it is against conscience to execute, and of which the injured party could not have availed himself in a court of law, or of which he might have availed himself at law but was prevented from so doing by fraud or accident, unmixed with any fraud or negligence in himself or his agents. The implication from the court's discussion seems to be that where there has been a trial and judgment after full opportunity was given for the introduction of evidence, and no extrinsic or collateral fraud has occurred, the general rule should prevail. In Bailey v. Sundberg (decided by Judges Wallace and Lacombe in 1892) 49 Fed. 583, 1 C. C. A. 387, it was held that if, on a libel in rem for collision, the master of the libelee, though not a formal party, took an active part in the defense, a dismissal on the merits rendered the questions res adjudicata as against a subsequent libel in personam against him. In Graver v. Faurot (C. C.) 64 Fed. 241, decided in 1894, an action was brought to set aside on the ground of fraud a decree rendered in a state court. Defendant demurred to the bill. The fraud charged was perjury by Faurot and the deception of the court. Judge Jenkins said the question was "sharply presented" whether a judgment can be attacked for fraud and the prevailing party deprived of the benefit thereof when he has obtained that judgment by perjury in his answer or upon the trial. Referring to the Throckmorton and Marshall v. Holmes Cases, supra, the learned judge said he could not distinguish between the two cases, but followed the Throckmorton Case because the later case cited it with approval, and because the fraud in the case before him was not extrinsic, but was in issue in the primary suit. An appeal was taken, and the Circuit Court of Appeals of the Seventh Circuit (76 Fed. 257, 22 C. C. A. 156) reversed the case upon the ground that it was not one within the spirit or reason of the decisions of the Supreme Court cited, inasmuch as there never was a trial in Graver v. Faurot, the complainant having failed to reply to the answer, and the case having been submitted with the answer as conclusive proof. The court points out that there was no conflict or weighing of evidence, but decree went as a matter of course; and the decision turned upon the point that the case was one of fraud that was extrinsic and collateral, distinct from and antecedent to the use of the answer at the hearing. The judges referred to a possible inconsistency between the decisions of the Supreme Court, but distinguished the case before them from both. In Hilton v. Guyot, 159 U. S. 113, 16 Sup. Ct. 139, 40 L. Ed. 95, decided in 1895, after reargument, the Supreme Court, by Justice Gray, used this language:

"It has often indeed been declared by this court that the fraud which entitles a party to impeach the judgment of one of our own tribunals must be fraud extrinsic to the matter tried in the cause, and not merely consist in

Digitized by Google

false and fraudulent documents or testimony submitted to that tribunal and the truth of which was contested before and passed upon by it."

—citing the Throckmorton Case as first among those establishing the doctrine announced.

This opinion, it will be observed, was delivered just before the case of Graver v. Faurot, 76 Fed. 257, 22 C. C. A. 156, was decided by the Court of Appeals, but evidently it was not brought to the attention of the latter court. A few years later (1898) the Court of Appeals of the Second Circuit decided United States v. Gleeson, 90 Fed. 778, 33 C. C. A. 272. That was a suit to vacate and annul a judgment on the sole ground that defendant induced the court to make its judgment solely by his own false and perjured testimony. But the court followed the doctrine of the Throckmorton Case as reiterated in Hilton v. Guyot, supra, and by the rule of stare decisis affirmed the decision of the Circuit Court sustaining a demurrer to the bill. Marshall v. Holmes, supra, was there called to the court's attention, and they answered the suggestion of a possible modification of the Throckmorton Case in this way:

"Precisely the same question—as to the effect of Marshall v. Holmes upon U. S. v. Throckmorton—was before us in the case of Bailey v. Sundberg, 1 U. S. App. 101, 1 C. C. A. 387, 49 Fed. 583. In that cause the libelant, who had been defeated in an action in rem against a steamship, brought a new action in personam against her owners. This court held that the decree in the earlier suit precluded Bailey from a re-examination of the same questions in the later suit. Subsequently he amended his libel, charging that, without negligence or laches or other fault on the part of the libelants, the respondent, by his false evidence given in the action in rem, enabled the claimants of the steamship to obtain the judgment therein, which judgment was set up as res adjudicata. Exceptions to this amendment were sustained by the District Court, and the libel dismissed. Upon appeal to this court the decree of the District Court was affirmed upon the authority of U. S. v. Throckmorton, no opinion being written. The libelant thereupon twice appealed to the Supreme Court for a certiorari, upon briefs which presented with very great fullness the apparent conflict between the two cases in 98 U. S. (25 L. Ed.) and 141 U. S. and 12 Sup. Ct. (35 L. Ed.) and urged upon the consideration of the court that the judges in the Second Circuit were following the earlier, rather than the later, decision. Both applications were denied. 145 U. S. 628, 12 Sup. Ct. 259, 36 L. Ed. 855; 154 U. S. 494, 14 Sup. Ct. 1142, 38 L. Ed. 1078. Until the attention of this court is called to some decision of the Supreme Court, other than Holmes v. Marshall, criticising or limiting the doctrine of U. S. v. Throckmorton, it would seem that the principle of stare decisis should preclude its entertaining a bill which seeks to vacate or annul a judgment solely on the ground that such judgment was procured by means of the perjured testimony of the party whom it benefits."

Again, in the later case of United States v. Beebe, 180 U. S. 343, 21 Sup. Ct. 371, 45 L. Ed. 563, decided in 1901, the Supreme Court, through Justice Peckham, reaffirmed the general principle of the Throckmorton Case, supra, holding that false representations were not such a fraud as a court of equity will relieve against by setting aside a judgment in a case where such representations were made.

A still later decision is Bailey v. Willeford (C. C.) 126 Fed. 803, where Judge Simonton interpreted the rule of the Throckmorton Case as did the Court of Appeals in U. S. v. Gleeson, supra, and his decision was affirmed in 1905 by the Court of Appeals of the Fourth Circuit. Bailey v. Willeford, 136 Fed. 382, 69 C. C. A. 226. It will be seen from these cases that the doctrine upheld by the federal courts

Digitized by Google

continues to be in accord with that pronounced in the Throckmorton Case, supra, which refuses relief unless the fraud complained of is extrinsic to the matter tried in the primary suit.

Turning to the decisions of the Appellate Courts of several of the states, we find the same general established rules. In Ross v. Wood, 70 N. Y. 9, the Court of Appeals denied relief where it was sought to set aside a judgment upon the ground that it was obtained by false testimony. In Dringer v. Receiver, 42 N. J. Eq. 573, 8 Atl. 811, the Throckmorton Case is approved, and it was held that, where fraud is relied on to annul a judgment, the fraud, in order to confer jurisdiction, must consist in something extrinsic or outside of the matter which was actually tried, or so in issue that it could have been tried in the suit in which the judgment assailed was entered. The Supreme Court of California in Pico v. Cohn, 91 Cal. 129, 25 Pac. 970, 27 Pac. 537, 13 L. R. A. 336, 25 Am. St. Rep. 159, in an opinion by Chief Justice Beatty, very clearly announces that a decree will not be vacated merely because it was obtained by perjured testimony. The court said:

"The reason of this rule is, that there must be an end of litigation; and when parties have once submitted a matter, or have had the opportunity of submitting it, for investigation and determination, and when they have exhausted every means for reviewing such determination in the same proceedings, it must be regarded as final and conclusive, unless it can be shown that the jurisdiction of the court has been imposed upon, or that the prevailing party, by some extrinsic or collateral fraud, has prevented a fair submission of the controversy."

In Friese v. Hummel, 26 Or. 145, 37 Pac. 458, 46 Am. St. Rep. 610, the case of Pico v. Cohn was approved and followed. In Camp v. Ward, 37 Atl. 747, 69 Vt. 286, 60 Am. St. Rep. 929, the Supreme Court of Vermont refused to grant relief in equity where it was alleged the judgment was obtained by perjured testimony. In McDougall v. Walling, 58 Pac. 669, 21 Wash. 478, 75 Am. St. Rep. 849, the Supreme Court of Washington followed the Throckmorton Case, supra, and Pico v. Cohn, supra, notwithstanding an express statutory provision of that state to the effect that the superior court may vacate a judgment for fraud practiced by the successful party in obtaining it; the court holding that perjury does not constitute such fraud as will authorize a judgment to be set aside except under circumstances that deceive the opposite party as to the nature of the testimony, and relieve him of the implication of want of diligence in discovering its falsity. In Maryland Steel Co. v. Marney, 46 Atl. 1077, 91 Md. 360, the Court of Appeals of Maryland laid down the same rule, expressly declining to recognize any distinction between the instances where witnesses have perjured themselves and where the successful party has been guilty of subornation of perjury.

It would be useless to cite further authority. The cases we have collected demonstrate that the trend of modern decision sustains the reason of the Throckmorton Case as founded upon wisdom in the policy of the law, whereby, after a fair trial and submission of a controversy and after motion for a new trial has been denied, and after an appeal to a superior tribunal and a review have been had, a judg-

Digitized by Google

ment will not be vacated, at a subsequent term, merely because it was based on perjured testimony by a party. Defendants cite Munro v. Callahan, 75 N. W. 151, 55 Neb. 75, 70 Am. St. Rep. 366. The decision in that case was justified upon an express statute of the state authorizing a judgment to be vacated, after the term at which it was rendered, for fraud practiced by the successful party; and perjury was regarded as within the fraud contemplated by the Code provision. The discussion by the court seems to go farther than the point decided and to sustain the defendant's position. But in so far as it conflicts with the rule of decision by the federal courts, we cannot agree with it. Edson v. Edson, 108 Mass. 590, 11 Am. Rep. 393, was not a case involving intrinsic fraud or fraud upon the trial. The court, taking the facts alleged in the application to set aside the decree of divorce, distinguished the case in this way:

"These set forth a case in which it is clear that a party has procured a judgment of this court in his favor by the perpetration of a gross fraud, by means of which he induced this court to take cognizance of a case at a term of the court in a county in which it could not legally exercise jurisdiction over the parties, and to hear and determine it without giving to the adverse party any due or legal notice of the proceedings, or any opportunity to appear and be heard in the suit. The question to be determined is, whether a judgment so obtained can be re-examined and set aside by the party aggrieved by the fraud, or whether it is to be taken as forever binding and conclusive on the rights and obligations of the parties."

The reasoning of the court is similar to that in Graver v. Faurot, supra. Nugent v. Met. St. Ry. Co., 61 N. Y. Supp. 476, 46 App. Div. 105, also cited by respondents, was decided upon a motion for a new trial based upon a discovery made by the losing party that the judgment and verdict had been obtained by means of a conspiracy between plaintiff and one of her attorneys and several witnesses. That a judgment will not be vacated merely because it is based upon or procured by perjured testimony was conceded by the court, but it was shown that the case was taken out of the general rule by the added fraud of a conspiracy. Holton v. Davis, 108 Fed. 138, 47 C. C. A. 246, decided by this court, does not conflict with the established rules. There the bill alleged a conspiracy between one of the parties and outside persons and the carrying out of the conspiracy and a fraud upon the court. The facts pleaded were relied upon as showing extrinsic and collateral fraud, and as the court cited the Throckmorton Case it is not to be inferred that it intended to go beyond the correct rule to be deduced therefrom.

Defendants contend, however, that power to vacate the judgment existed under the Alaska Codes. It is therein provided that a District Court may in its discretion, and upon such terms as may be just, at any time within one year after notice thereof, relieve a party from a judgment or order or other proceeding taken against him through his mistake, inadvertence, surprise, or excusable neglect. Section 93, Alaska Code Civ. Proc. Defendants have failed to make a satisfactory showing under any of the enumerated grounds of this statute. The issue tried in the original suit was narrowed to whether the plaintiffs sunk hole No. 3 to bed rock. Their verified complaint alleged that they had, and defendants by their answer denied that

Digitized by Google

they had; so that the controversy, as was stated by Judge Hawley in the opinion of the court in Meehan v. Nelson, supra, was "confined solely to hole No. 3. Was it sunk to bedrock?" Defendants went into the trial of the cause knowing precisely what plaintiffs would have to swear to to prevail, and they met the issues presented, but were defeated. They were not surprised, there was no inadvertence or mistake, and they are not to be relieved now if they omitted to produce evidence they might have procured. Having tried the merits of their suit, if the term is over, they are estopped by the conclusion of the court. The affidavits filed in support of and against the motion to vacate are a continuation of conflicting testimony upon the identical issues tried before. It is said, however, that the statute of Alaska (section 93) is taken from Oregon, and that it has been construed by the Supreme Court of that state in a way favorable to appellees in Thompson v. Connell, 31 Or. 231, 48 Pac. 467, 65 Am. St. Rep. 818. That decision, however, does not sustain the contention that perjury alone committed upon the trial of a case by the prevailing party is a ground for relief under a statute like section 93 of the Alaska Code. The facts relied upon in that case were that defendant and another person, with intent to deceive plaintiff and induce him not to employ an attorney in the original suit, represented that Connell would extend the time for answering and that a settlement was contemplated by which plaintiff would be discharged from his alleged liability, and that plaintiff relied upon the representations so made and did not employ an attorney or appear in the case, but that defendant, conspiring to take advantage of him and to defraud him, caused judgment to be rendered against him without his knowledge or consent and contrary to the agreement. These facts were held to constitute "surprise" under the statute. The decision is in no way authority in the present case.

So if it is a fact that the term of court at which the decree was rendered had expired before the motion to vacate was filed, then the case is but one where the litigants have had their day in court, and have been afforded full opportunity to try the merits of their controversy. They had a fair trial. The defendants lost. They were given the right of appeal and availed themselves of it. Again they were unsuccessful; and no fraud extrinsic or collateral to the matter tried being shown, and no statutory ground for vacating the decree appearing, it will not do for them now to seek to retry the issues already passed upon. The litigation should be ended.

For the reasons already given, the appeal is dismissed.

(155 Fed. 11.)

GREAT LAKES TOWING CO. v. MILL TRANSP. CO.

(Circuit Court of Appeals, Sixth Circuit. July 30, 1907.)

No. 1,662.

1. SHIPPING—RIGHT TO LIMITATION OF LIABILITY—CONSTRUCTION OF STATUTE. Section 18 of Act June 26, 1884 (23 Stat. 57, c. 121 [U. S. Comp. St. 1901, p. 2945]), which provides that "the individual liability of a shipowner shall be limited to the proportion of any or all debts and liabilities

Digitized by Google

that his individual share of the vessel bears to the whole; and the aggregate liabilities of all the owners of a vessel on account of the same shall not exceed the value of such vessel and freight pending," and Rev. St. § 4283 [U. S. Comp. St. 1901, p. 2943], are in pari materia, and to be construed together. The provision of the older act by which the limitation of liability therein provided for is confined to things "done, occasioned or incurred without the privity of knowledge of such owner or owners," also qualifies the latter act, which was not intended to apply to liabilities of the owners of vessels for the consequences of their personal faults or upon obligations personally contracted by them.

[Ed. Note.—Limitation of owner's liability, see note to The Longfellow, 45 C. C. A. 387.]

2. SAME—WRECKING SERVICE PERFORMED UNDER CONTRACT.

A towing company entered into a contract with the managing agent of petitioner, which was the owner of certain vessels on the Great Lakes, by which it agreed to perform all towing and wrecking service required by such vessels during the season at certain stated prices. One of petitioner's vessels having stranded, the towing company was called on pursuant to said contract, and sent a tug with wrecking apparatus to the assistance of such vessel, where it spent several days in pumping and attempting to get her afloat, but unsuccessfully, and she was lost. *Held*, that section 18 of Act June 26, 1884 (23 Stat. 57, c. 121 [U. S. Comp. St. 1901, p. 2945]), did not entitle petitioner to a limitation of liability for the services so rendered by the towing company under its contract to the value of the salvage recovered from the wreck.

3. PRINCIPAL AND AGENT—CONTRACT MADE BY AGENT—ADOPTION BY PRINCIPAL.

If a principal not disclosed by a contract made by and in the name of his agent subsequently claims the benefit of it, the contract thereby becomes his own to the same extent as if his name had originally appeared as a contracting party.

[Ed. Note.—For cases in point, see Cent. Dig. vol. 40, Principal and Agent, §§ 502, 503, 645.]

4. SHIPPING—PERSONAL LIABILITY OF SHIPOWNERS—CONTRACTS MADE BY MANAGING AGENT.

The contracts of a managing agent of a steamship company, within the sphere of his authority, are the actual contracts of the owner and not of the vessels to which they relate, as in case of contracts made by a master on a voyage or in foreign ports.

Appeal from the District Court of the United States for the Eastern District of Michigan.

H. D. Goulder, for appellant.
G. L. Canfield. for appellee.

Before LURTON, SEVERENS, and RICHARDS, Circuit Judges.

SEVERENS, Circuit Judge. The controversy in this case arose upon a petition of the appellee, the Mills Transportation Company, for an order limiting its liability for services rendered by the appellant in endeavoring to rescue the steamer Newago, a vessel belonging to the appellee, which had been stranded upon a reef in that part of Lake Huron, known as the Georgian Bay. The accident to the Newago occurred on November 17, 1903. Prior to this accident, and on July 9, 1903, the appellant addressed to H. McMorran, who was the managing agent for the appellee of the Newago and other of its vessels, as well as of other parties for other vessels, the following proposition:

Digitized by Google

"The Great Lakes Towing Company.

"Cleveland, Ohio, July 9th, 1903.

"To H. McMorran, Pt. Huron, Mich.:

"We hereby propose to furnish all the towing and wrecking services required by the boats under your management during the balance of the year 1903, ———, at points covered by the Great Lakes towing tariff for 1903, on the following terms:

"In consideration of your agreeing to have all of the boats under your management employ the tugs and wrecking appliances owned or specified by us during the balance of the year 1903, ———, at points covered by The Great Lakes Towing Tariff we will allow the following discounts from said tariff:

"Harbor Towing. At Chicago and Tonawanda 35 per cent. discount from said tariff, and at all other points 30 per cent. discount from said tariff, with a further discount in both cases of 10 per cent. for cash on all bills paid within the month following that in which the service is rendered.

"Wrecking or Bottom Work. A discount of 20 per cent. from said tariff, and a further discount of 5 per cent. for cash if bills are paid within the month following that in which the service is rendered.

"Soo. For landing stern barge at the Soo the rate to be $5.00 flat, without discounts, for each service.

"Lake Towing. When barges are transferred from port to port, where there is a lake tow, no charge to be made for the in tow.

"Maximum Rate. The maximum rate for and in and out tow at any port where only the one cargo is handled shall not exceed seventy-five dollars ($75.00) net each.

"All charges for labor, meals and other items representing cash advances shall be net, and payable on demand.

"These rates only apply to vessels actually engaged in the lumber trade, and refer only to boats of twelve hundred thousand capacity and under.

"We will endeavor to have tugs of suitable power on hand at all times to provide a first-class service, but shall not be held liable for damages in case we are not able at any time to furnish such service. In case, however, at any time, for any reason, we are unable to have tugs on hand to serve your boats, you are at liberty to engage any other tugs to serve you for that time, but without the right to charge us any difference in price.

"The vessels towed shall furnish good and sufficient lines.

"The Great Lakes Towing Company,
"By C. H. Sinclair, G. M."

This proposition was on its receipt accepted in the following language thereunder written:

"The undersigned, H. McMorran, mang. owner, manager of boats named below, hereby accepts the above proposition, for said boats and for the consideration named therein, agrees to cause said boats to employ the tugs, lighters and wrecking outfit owned or specified by The Great Lakes Towing Company, at points named in said The Great Lakes Towing Tariff, on above named terms, at all times during the balance of the year 1903 when they require such service.

H. McMorran.

"Steamers.

"Steamer Gogebic,
"Steamer Newago,
"Steamer Pawnee,
"Steamer Britannic,
"Steamer Mary Groh,
"Steamer M. Ross.

"Consorts.

"Schr. Checotah,
"Barge M. E. Orton,
"Barge J. R. Edwards,
"Barge W. A. Young,
"Schr. Thos. Howland."

Digitized by Google

The vessels named in this list belonging to the Mills Transportation Company were the Gogebic, the Newago, and the Checotah.

Upon the happening of the accident to the Newago, her captain forthwith telegraphed to his principal, the Mills Transportation Company, that the Newago was ashore on Devil's Island Shoal leaking badly, and asking that a wrecking outfit be sent. The Mills Transportation Company were aware of the contract of the appellant with McMorran, and on receipt of the telegram above mentioned communicated with McMorran, who was then at Washington, but had left subordinates in his office at Port Huron. Through these subordinates, the request for the assistance of a tug and other wrecking outfit was made to the appellant, which thereupon dispatched the Favorite and wrecking apparatus to the scene of the disaster; and the appellee notified the captain of the Newago by telegram that this had been done. On arrival the Favorite found the Newago difficult of access, being in a place of great danger. But the Favorite stood by and endeavored for several days to rescue the steamer. Its efforts were unsuccessful, and the Favorite was finally discharged from further service. The Newago was lost and only about $156 in value of her remnants were saved. Subsequently the appellant presented to the appellee a bill for the services thus rendered as follows:

Dec. 3, 1903.

Steamer Newago, to the Great Lakes Towing Co., Dr.
For tug services at port of ————, Str. Favorite.

1903	From	to	Tug Favorite.

Nov. 17 to 27 inclusive. To services rendered while steamer was ashore Devil's Island Shoal 10 days at $350.00 per day.....	$3,500 00
To use 2-12" steam pumps 10 days each, 20 days at $50 per day..	1,000 00
	$4,500 00

But the personal liability of the appellee for the bill was not admitted. We do not understand that the bill itself was objected to, but it was contended that there was no personal liability of the owner therefor, and that recourse was available only against the vessel of which the remnants above mentioned were the only parts in esse.

In this state of affairs the appellee filed its petition for the limitation of its liability. The remnants were appraised and a bond given by the petitioner for the sum of $250. The appellant appeared and filed its answer in opposition to the limitation prayed for in the petition, and its claim with a prayer for a decree for payment of the same. The court below held and decreed in favor of the petitioner that its liability be limited as prayed. Upon these facts we think the court below was in error.

By Act March 3, 1851, c. 43, 9 Stat. 635 (section 4283, Rev. St. [U. S. Comp. St. 1901, p. 2943]), it was enacted that:

"The liability of the owner of any vessel, for any embezzlement, loss, or destruction, by any person, of any property, goods, or merchandise, shipped or put on board of such vessel, or for any loss, damage, or injury by collision, or for any act, matter, or thing, lost, damage, or forfeiture, done occasioned, or incurred, without the privity or knowledge of such owner or owners, shall in no case exceed the amount or value of the interest of such owner in such vessel, and her freight then pending."

Digitized by Google

And by section 18 of the act of June 26, 1884 (23 Stat. 57, c. 121 [U. S. Comp. St. 1901, p. 2945]), it was further enacted that:

"The individual liability of a ship-owner, shall be limited to the proportion of any or all debts and liabilities that his indvidual share of the vessel bears to the whole; and the aggregate liabilities of all the owners of a vessel on account of the same shall not exceed the value of such vessel and freight pending: Provided, that this provision shall not affect the liability of any owner incurred previous to the passage of this act, nor prevent any claimant from joining all the owners in one action; nor shall the same apply to wages due to persons employed by said ship owners."

In a number of cases it has been held, and we have no doubt correctly, that these two provisions, relating as they do to the same class of persons and to the same subject, should be regarded as regulations in pari materia, and should be construed as parts of an entire scheme. We refer to this rule of construction of statutes in pari materia, because, as will be noticed, the words "done, occasioned or incurred, without the privity or knowledge of such owner or owners," which are contained in the act of 1851 are not employed in the act of 1884; and from this circumstance counsel for the appellees argues it was intended by the use of the words "debts and liabilities" in the later act to mean all debts and liabilities incurred on account of the vessel, whether with or without the privity or knowledge of the owner; whereas, if the act of 1884 were put to follow the act of 1851, so as to further provide for the application of the provision of the act of 1851, to the case of each individual shareowner of the vessel, and then sum up by declaring that all the liabilities of the owners on account of the vessel shall not exceed the value of the vessel and pending freight, the result would be that the condition of privity or knowledge of the owner would be carried along into the subsequent section. Another reason for thinking that the eighteenth section of the act of 1884 was intended as an extension merely of the relief provided by the act of 1851 is found in the fact that the act of 1851 contains provisions for the procedure in applying the limitation. One of these is by paying into court the appraised value of the ship and pending freight, the other by surrendering the vessel and freight. The owner of the ship might adopt either of these. The Scotland, 105 U. S. 24, 26 L. Ed. 1001. These privileges are analogous to those which the owner has in ordinary seizures, when he may give bond and release the vessel, or he may suffer the vessel to be condemned and sold. But the act of 1884 provides no procedure for administering its provisions. And this, we think, furnishes an inference that the act of 1851 was regarded as the basic law, to which section 18 of the act of 1884 was intended to be supplementary. And the provision of this alternative mode of procedure suggests a query whether this legislation does not contemplate that the liability of the ship is to be presupposed, and such a liability would not exist in case the owner had personally contracted the debt, and had not stipulated for a lien, either expressly or by fair implication. The St. Jago de Cuba, 9 Wheat. 409, 6 L. Ed. 122; The Grapeshot, 9 Wall. 129, 136, 19 L. Ed. 651; The Valencia, 165 U. S. 264, 17 Sup. Ct. 323, 41 L. Ed. 710; The Havana, 35 C. C. A. 148, 92 Fed. 1007. But we think there are other reasons of sufficient weight to lead to the

Digitized by Google

conclusion that the act of 1884 was not intended to have application to liabilities of the owners of vessels for the consequences of their personal faults or of obligations personally contracted by them. The purpose of Congress, was, as we think, to relieve the shipowner from the consequences of those extraordinary risks which were imposed without limitation by the law of the admiralty as that law had been interpreted in this country. And by extraordinary risks we mean those risks arising from the conduct of, and contracts made by, those who are beyond the personal supervision and control of the owner and yet have legal authority to bind him to answer for their conduct or contracts; or, to express the thought in another way, that the liabilities intended by this legislation were those peculiar to him as a shipowner and had been imputed to him because of his relation to the ship, and not those liabilities, whether for torts or from contracts, which spring from his own personal conduct or stipulations. It seems to us altogether unlikely that Congress intended to qualify the power of an owner to make contracts in relation to his ship which by the universal law would be valid if made about any thing else and would be enforced in the courts in common-law actions. It would be an anomaly that a party competent to do business should be unable to make a valid contract about his own affairs, or be given such an immunity as to make his stipulations of uncertain value. Such a doctrine would be inconvenient in the last degree to the owners of vessels and the interests of commerce. If in every case the party who should undertake to render assistance to other vessels on request of the owner should be dependent on the proceeds of the vessel for his compensation, he would be likely to consider the chances, and the sorer the need of the services the less likely would the owner be to secure them. Instead of relieving him of a burden, he would be burdened with the disability of pledging his personal credit for the securing of the needed assistance. Besides, the history of the law upon this subject furnishes an argument in favor of the construction we think should be put upon the statute. It is succinctly stated by Mr. Justice Bradley in Butler v. Boston Steamship Co., 130 U. S. 527, 9 Sup. Ct. 612, 32 L. Ed. 1017. From an early period the maritime law of the commercial nations of the continent of Europe had accorded to the owners of ships this limitation of liability to the value of the ship and freight earned; but this limitation was not allowed when the liability was incurred with the privity or knowledge of the owner. The maritime law of the continent was not accepted by the English courts, and was rejected by the courts of this country. The acts of 1851 and 1884 have established in the United States the rules of the general maritime law upon this subject, and in almost the identical language in which those rules have been expressed in the Codes and text-books of the countries in which the general law had been embodied. As Mr. Justice Bradley said, in reference to the divergence in this country from the general maritime law, and the return thereto by the enactment of the statutes here for the relief of shipowners, "We have rectified that." And we are convinced that the general understanding of the courts of this country is that the statutes here enacted have restored the old rule for the like occasions, namely, when the liability of the owner has occurred without his own

Digitized by Google

participation in the cause or creation of the liability. The suggestion of Mr. Justice Bradley in Butler v. Boston & Savannah Steamship Co., although not necessary to the decision of that case, seems to have been generally adopted as indicating the proper construction. Indeed, prior to that decision, the statutes, including that of 1884, had received that construction by Judge Brown in the Southern District of New York in the Amos D. Carver (D. C.) 35 Fed. 665, Force v. Providence Ins. Co. (D. C.) 35 Fed. 767, and Miller v. O'Brien (D. C.) 35 Fed. 779. And in later decisions that learned and distinguished judge maintained the doctrine he had previously declared. Laverty v. Clausen (D. C.) 40 Fed. 542; Gokey v. Fort (D. C.) 44 Fed. 364; Douse v. Sargent (D. C.) 48 Fed. 695. It was also approved by Judge Nelson in the district of Massachusetts in McPhail v. Williams (D. C.) 41 Fed. 61, and in Whitcomb v. Emerson (D. C.) 50 Fed. 128, and by Judge Webb in the district of Maine in the Giles Loring (D. C.) 48 Fed. 463.

In the case of Whitcomb v. Emerson, supra, and in Warner v. Boyer (D. C.) 74 Fed. 873, decided by Judge Butler, the statute of 1884 was held to relieve part owners from the consequences of contracts made by other part owners; and this upon the ground that shares are separately owned and so dealt with by the statute, and hence the non-participating owners were entitled to be relieved in respect of their shares. This is in entire accordance with the rule. Judge Butler in deciding the case last cited seems to have entertained the view that the acts of 1851 and 1884 were to be construed independently and not as in pari materia, but his actual decision was notwithstanding rested upon a principle which we regard as sound.

In the Circuit Courts of Appeals a like interpretation has been given to these statutes. In the case of The Republic, 61 Fed. 109, 9 C. C. A. 386, it was held by the Court of Appeals for the Second Circuit that the shipowner was not entitled to the limitation in respect of a loss which arose from the defective condition of his ship of which he was ignorant because of his own negligent examination of the vessel. The court said by Judge Wallace, referring to the eighteenth section of the act of 1884, "The section does not purport to repeal any pre-existing law, but is legislation in pari materia with the act of 1851" —and adopts the construction of Judge Brown in the cases above cited. This was a case of the negligent performance of a duty, and not a willful act of the owner. It would certainly be incongruous with this decision to hold the shipowner entitled to relief against his own contract. In the case of The Faxon, 75 Fed. 312, 21 C. C. A. 366 (the Circuit Court of Appeals for the Ninth Circuit), the limitation sought was for a loss occasioned by the explosion of the boiler of the vessel. The court recognized the distinction which had been made in previous cases between liabilities arising from causes within the knowledge or privity of the owner and those which are imputed to him because of his relation to the ship, but held that the owner was in that case entitled to the limitation for the reasons that the defect in the boiler was not one apparent to the owner, that it had been inspected by the government inspectors and repaired in accordance with their directions by a skilled marine engineer. The court was of opinion that the owner

Digitized by Google

had discharged his duty in respect of the condition of his vessel, and that, therefore, there was on his part no pesonal fault.

Another case in which this question was involved and which is much relied on by the appellee is Gilchrist v. Chicago Ins. Co., 104 Fed. 566, 44 C. C. A. 43, a case decided by the Circuit Court of Appeals for the Seventh Circuit, the opinion being by Mr. Justice Harlan. But an analysis of the opinion shows that it was decided upon the same construction of the statute of 1884 as had been made in the earlier cases. The vessel was stranded in Lake Huron on May 6, 1894. Underwriters had issued policies of insurance on the vessel which contained a provision that, "in case of loss or misfortune, the insured should give prompt notice to the insurer of the disaster and among other things make all reasonable exertions in and about the defense, safeguard and recovery of said vessel," and stipulated that the underwriters would contribute to the expenses. On the occurrence of the accident the master of the vessel summoned the libelant who went with tugs and wrecking apparatus to the rescue of the vessel, and finally, on May 18th, got her afloat; but on the next day she went down in a storm, only some remnants being saved. Thereupon the owner abandoned the vessel to the insurers as a total loss. While the libelant was engaged in rescuing the vessel an agent of the underwriters was sent to assist in the work. He remained some days, giving directions and approving what the master had done. A libel in personam having been filed by the owner of the wrecking outfit against the owner of the vessel and the underwriters, defense was made by the underwriters that they had never employed the libelant, and were not responsible for his services. They also severallly filed petitions for the limitation of their liability. Some of the facts here stated more fully appear from the report of the case in the court below. Gilchrist v. Godman (D. C.) 79 Fed. 970. Upon these facts the Court of Appeals held that at the time when the services were rendered the underwriters were the owners of the vessel, but solely because of the retroactive effect of the subsequent abandonment, which related back to the time of the disaster and vested the ownership in them as of that date, and that each of them was to be charged ratably with the payment of the libelant's claim; but that they were severally entitled to the benefit of the limitation of the act of 1884. The reason for this is thus stated in the opinion (page 573 of 104 Fed., and page 50 of 44 C. C. A.):

> "The liability of the underwriters in the present case arises, not from any personal contract by them with the libelants, but from the rule of law which in the case of a valid abandonment, makes the insurer the owner of the vessel from the time of the original disaster."

It is evident that the learned justice recognized that the consequence would have been otherwise, if the underwriters, had made a personal contract. This inference is confirmed by his further statement that:

> "The fact that the libelants might have looked to her [one of the defendants] as the original owner upon her personal contract made with them through her agent does not relieve the underwriters from the liability arising out of their becoming the owners of the entire property from the date of the disaster."

Digitized by Google

The substance of the decision was that the underwriters' liability was one which must be imputed to them because they were the owners, yet that this liability was subject to limitation because of the fact that it did not arise upon any personal contract made with them. The case is therefore in harmony with the other cases we have referred to.

In the First Circuit the question arose in Quinlan v. Pew, 56 Fed. 111, 5 C. C. A. 438, where it was held by the Circuit Court of Appeals that the owner was entitled to the relief where the liability arose from the neglect of the master to inform the owner of a defect in the fittings of a pennant of which defect the owner had no knowledge, but the whole course of the discussion by Judge Putnam shows that actual knowledge by the owner would have led to a different result. And, inasmuch as the accident happened some years after the enactment of 1884, it must be assumed that the court held that in this respect the qualification of the right to a limitation of liability contained in the act of 1851 was intended by the act of 1884.

These statutes have since been several times referred to in opinions by the Supreme Court, but in none of them has the question now before us been considered. We have the impression that the absence of any such question in the Supreme Court is due to the fact that counsel have generally regarded the rule as settled upon the suggestion of Mr. Justice Bradley in Butler v. Steamship Co., supra, by the general concurrence of the courts. The only discordant note is a passage in the third edition of Benedict's Admiralty, published soon after the enactment of the statute of 1884, wherein it is said in section 565 that the language of the act of 1884 would seem on its face to have removed the necessity of averring in the petition for limiting liability that the liability had been incurred without the knowledge or privity of the owner; that is, of the petitioner. And it is said that at the least the obvious construction of the act is that such privity or knowledge is not material. "But," it is said, "it has been decided in the lower courts that these words do not include the liability of the owner on his personal contract," referring to the cases of the Amos D. Carver, McPhail v. Williams, and The Loring, supra. Perhaps if other legislation upon the same subject, the history of the maritime law, the doctrines of the common law of contracts and the inconvenience to the public from so broad and unlimited an interpretation of the statute were all to be ignored, the construction contended for by the author would be legitimate, but that would be to disregard some of the most fundamental rules for interpreting the meaning of statutes.

Counsel for appellee invokes another rule of construction, and points to the language contained in the proviso at the end of section 18 of the act of 1884, which is:

> "Nor, shall the same apply to wages due to persons employed by said ship-owners."

And says that the primary and usual office of a proviso is to except something out of a statute which would otherwise be within it. Undoubtedly this is a general rule of construction. But it is not universal,

Digitized by Google

and a proviso or an exception may be used for another purpose. The case of Baggaley v. Pittsburg Iron Co., 90 Fed. 636, 33 C. C. A. 202, decided by this court, is an illustration, where it was pointed out that an exception might be used from an excess of caution. And see what was said by Mr. Justice Story in Minis v. United States, 15 Pet. 445, 10 L. Ed. 791. No doubt the principal object of this exception was to protect the crews of vessels in respect of their wages, which has always been a matter of solicitude in legislation and of the courts. It is well known that they are hired sometimes by the owner of the vessel or his managing agent, and sometimes (and more generally in former times) by the master. Section 18 without this proviso would include wages due to seamen employed by him on his ship whether the contract of hiring was made by him, his manager, or the master. And we think it was intended by this exception to guard against an interpretation of the act which would affect the wages of employés by whomsoever hired. By "employed" is not meant those only who were hired by him personally. Of course, there would be no reason in such discrimination. If this was the intention of the exception, it throws no light upon the particular question of construction we are considering.

It is contended, however, that the liability in this case did not arise from any personal contract of the Mills Transportation Company. The principal ground on which this contention is urged is that the contract does not mention the company, that on its face it is the contract of Henry McMorran and the towing company. That it was made by him in a representative capacity for some one is clear. In respect of the Newago he was managing agent for the Mills Transportation Company which owned that vessel. And when these facts appear it is evident that he was making the contract for the company.

Story on Agency, § 160a; Mechem on Agency, §§ 769, 772; Higgins v. Senior, 8 Mees. & W. 844; Ford v. Williams, 21 How. 287, 16 L. Ed. 36; Higgins v. McCrea, 116 U. S. 671, 680, 6 Sup. Ct. 557, 29 L. Ed. 764; Barrell v. Newby, 127 Fed. 656, 62 C. C. A. 382, and the numerous authorities cited by Mechem in the notes to section 769, supra. It is not material that he also contracted for other parties. It was not by that circumstance any the less the contract of the Mills Transportation Company. The maxim, "Reddendo singula singulis," applies. That he had authority to make such a contract for that company cannot be doubted. In 25 A. & Eng. Encl. of L. 886, it is said:

> "The owners of a ship generally appoint some person usually one of their number to be her manager. This person is called the 'ship's agent' or 'husband.' He is the general agent of the owners in relation to the ship, and may be appointed orally or in writing."

The third paragraph of the petition, after setting out the proposition and acceptance of July 9, 1903, alleges that they "constituted an agreement binding upon the Great Lakes Towing Company to render such towing and wrecking services as might be required by said vessels."

But it is unnecessary to determine whether the contract would bind that company in the absence of any proof that it had adopted it as its own. It was admitted by counsel that the services of the appellant

Digitized by Google

were requested and performed upon the footing of this contract. And, indeed, it is alleged in the appellee's petition:

"That in compliance with said request and under the agreement contained in said Exhibit A (which is the contract) hereto annexed the said Great Lakes Towing Company did send the tug Favorite with certain steam pumps aboard for the purpose of assisting said steamer."

If a principal not disclosed by a contract made by and in the name of his agent subsequently claims the benefit of it, it thereby becomes his own to the same extent as if his name had originally appeared as a contracting party.

The Mills Transportation Company, being a corporation, could act only through some agency. McMorran was the manager, and was vested with authority to make such contracts as this in behalf of the owner of the vessel, and the contract was the personal contract of the corporation, not in consequence of any principle peculiar to the maritime law, but by virtue of the common-law rules of agency.

But it is then said that the contract was made in behalf of the ship, and so was not the contract of the owner. This, however, rests upon an untenable theory. The contracts of the manager are the actual contracts of the owner, and are not of the same character as the contracts of the master made on a voyage or in foreign ports and which are imputed to the owner from the necessities of commerce. The acts of the managing agent within the sphere of his authority are as much the acts of the owner as if done by the owner himself. Only upon this theory could a corporation make what, for the purpose of making a distinction, is called a personal contract, that is to say, one which the owner himself or itself has made. Most of the cases which have been referred to were cases of negligence or some other tort of the owners, but, if as we suppose we should hold liabilities arising from contracts are included by the 18th section of the act of 1884, it must, we think, be admitted that, as the statute ranks them together and makes no distinction as regards the ground of liability, if negligence on the part of the owner deprives him of the right to a limitation, surely his voluntary creation of the liability ought with greater reason to bar his right to the limitation.

If it were an original question, we should have much doubt whether the act of 1884 was really intended to accomplish more than to make the provision for limitation by the act of 1851 applicable to cases of owners of the title of shares of the whole property in ships. But a further purpose in Congress has been recognized by other courts of co-ordinate jurisdiction, and we have deferred to that view.

The petition for the limitation of liability in this case misconceived the nature of the liability which the petitioner had incurred and which the towing company was seeking to enforce. The petition, after stating the rendering of the services under the contract and the loss of the vessel, proceeds to state as a ground for limitation that the stranding and loss of the vessel "were not done, occasioned, or incurred with the privity or knowledge of your petitioner or of any of its corporate officers, and your petitioner claims the benefit of the limitation of liability provided by" the statute. And the decree finds that this allegation was true, and evidently makes it the basis for according the

Digitized by Google

limitation. But the liability which this towing company was pursuing was not for any fault in the management of the Newago, but for services rendered under a contract with her owner in an endeavor to rescue her from peril and the question whether she was stranded and lost without the privity or knowledge of her owner was wholly immaterial. But the case has been argued as if the case were properly presented, and we have accordingly so dealt with it.

The decree of the court below which limits the liability of the appellee in respect of the claim of the appellant must to that extent be reversed, with costs. The amount due thereon will be ascertained, and such further proceedings had as the rules and practice of the court require.

(155 Fed. 22.)

RUSSELL v. OREGON SHORT LINE R. CO.

(Circuit Court of Appeals, Ninth Circuit. May 6, 1907.)

No. 1,385.

1. TRIAL—DIRECTION OF VERDICT—QUESTIONS OF NEGLIGENCE.

While questions of negligence are ordinarily for the jury in federal courts, a case may be withdrawn from the jury and a verdict directed for plaintiff or defendant, as may be proper, where there is no conflict in the evidence, or where it is so conclusive in its character that the court, in the exercise of its sound judicial discretion, would be obliged to set aside a verdict rendered in opposition to such evidence.

[Ed. Note.—For cases in point, see Cent. Dig. vol. 46, Trial, §§ 376-395; vol. 37, Negligence, §§ 277-286.]

2. MASTER AND SERVANT—TEMPORARY SUSPENSION OF RELATION—DEPARTURE BY SERVANT FROM SERVICE OF MASTER.

Plaintiff's intestate, who was a bridge foreman on defendant's railroad, living at the time in an outfit car on a siding, went with his family on a velocipede car one afternoon to a spur track some 2½ miles distant, near which his father-in-law resided. The car was returned, and in the evening about 7 o'clock some of the men by his direction came after him with a hand car. He was then at his father-in-law's house, where he had been visiting since 5 o'clock, by which time his business for the defendant at the spur, if any, had been finished. About 8:30 he started back with the men, having no light on the car, and while on the way was killed in a collision with a meeting special train. *Held*, that at the time he was engaged on his own private affairs, and no relation of master and servant existed between him and defendant which brought him within the terms of a state statute making railroad companies liable for injuries to their employés caused by negligence of their fellow servants.

[Ed. Note.—For cases in point, see Cent. Dig. vol. 84, Master and Servant, §§ 144-156.

Injuries to servant while not on duty, see notes to Ellsworth v. Metheney, 44 C. C. A. 489.]

3. RAILROADS—INJURY TO PERSON ON TRACK—CONTRIBUTORY NEGLIGENCE.

A bridge foreman on a railroad, familiar with the operation of trains thereon, and knowing that special trains were liable to run at any time, who, while not in the performance of any duty for the company, but in the pursuit of his own affairs, went upon the track at night on a hand car showing no light and was killed in a collision with a special train at a distance from any crossing, was guilty of contributory negligence, and there can be no recovery from the company for his death, even conceding that the train was negligently operated, where such negligence was not willful

Digitized by Google

nor wanton, and the presence of the hand car approaching on the track was not known to the engineer until the collision occurred.

In Error to the Circuit Court of the United States for the District of Idaho.

Will R. King, for plaintiff in error.

F. S. Dietrich, for defendant in error.

Before GILBERT and ROSS, Circuit Judges, and HUNT, District Judge.

HUNT, District Judge. The plaintiff, Frances B. Russell, as administratrix of the estate of P. J. Russell, deceased, brought this action against the Oregon Short Line Railroad Company, defendant, to recover a judgment for damages for the death of her husband, which occurred on the evening of December 3, 1903. Defendant denied negligence, set up contributory negligence, and that deceased was engaged on his own private business when he was killed. The evidence showed substantially these facts: The deceased, P. J. Russell, was and had been for seven years a bridge foreman of the defendant railroad company. About the time of his death, the bridge gang of which he was foreman was engaged in work upon a bridge that was about two miles or more east of the town of Ontario, a place of 1,100 or 1,200 people. The bridge gang lived in what are called "outfit cars," which were moved from place to place as convenience required. These cars were kept on a side track at the stockyards, half a mile east of the town of Ontario, The deceased and his family lived in one of the outfit cars. Russell had been working in that vicinity about a month. Two miles west of Ontario, at a place spoken of as "Washoe Siding," there was a spur. On the afternoon of December 3, 1903, the deceased did not go to work where the bridge gang was employed; but at noon of that day, at the outfit cars, he told one of the men that he was going to Washoe, and requested him (Stroup by name) to come over after him after the work of the day was finished. The custom of the bridge gang was to stop work at 6 o'clock, and then to eat supper. Prior to the date of the accident Russell had tendered his resignation to the defendant company, but was not to leave the service of the road for a few days. Russell had bought a ranch near the Washoe Spur, and his intention was to give up railroading, and to live upon his farm. Mrs. Russell's father and family also lived at Washoe next to Mr. Russell's place, about a quarter of a mile from the spur. About 3 o'clock on the afternoon of December 3d, the deceased took his wife and children on a railroad velocipede from the outfit cars to the Washoe Spur. Upon their arrival at the spur, the velocipede was left near the track, but was afterwards taken back by a railroad employé who had been at Russell's place that day. After leaving the spur, the Russells went over to the place owned by the deceased, and stayed there about half an hour. Mr. and Mrs. Russell were getting ready to move in a few days to the ranch. They spent the afternoon, principally, at Mrs. Russell's father's house. Mrs. Russell testified that while they were on the way to Washoe, or just before they started, her husband told her that he was going down there "to see about getting men to work, and to see about

Digitized by Google

the spur that was there, and to see if there was room to set cars in." She said, too, that her husband was outside of her father's house part of the afternoon, and that he had told her he was going to see about employing a man named Burgess. The Burgess people lived on the same side of the track that her father did, near the track, between her father's house and the town of Ontario, about a quarter of a mile nearer to town than her father's place. It would have taken her husband about 10 minutes to walk from her father's place over to the Burgess house. Russell took supper with his father-in-law and family about 5 o'clock, and remained with the family from supper time until he left. Mrs. Russell says that she intended to return with Mr. Russell, but her children went to sleep, and she did not go back, and that they remained so long after supper "simply visiting" and "in social intercourse" with her people. At about 7 o'clock three men from the bridge gang voluntarily went down to Washoe upon an ordinary hand car for the purpose of getting Mr. Russell. They reached Mrs. Russell's father's house about 7:30. They did not start back until about an hour or an hour and one-half after they reached Mrs. Russell's father's place, so that it was about half past 8 when Russell and the three men started eastward toward Ontario, where the outfit cars were. At a point approximately 3,800 feet west from the Ontario depot, an engine, drawing the general manager's special train of three passenger cars, came upon the hand car and the men. The speed of the hand car at the time was between five and eight miles an hour; it was making considerable noise. Russell was helping to pump the car. The speed of the special train is estimated by different witnesses for plaintiff at between 40 and 70 miles an hour. Some of the men on the hand car say they were looking ahead, but did not observe the special train until it was from 200 to 400 yards away, but could see the lights of the town of Ontario before they saw the train. There was no light of any kind on the hand car. There was then no headlight shining on the engine. Russell first called, "Stop! there is a train." The men stopped the hand car as quickly as possible, and endeavored to remove it from the track before the engine reached them. They lifted only one end of the hand car off the rail when the engine struck the other end, and threw Russell, who was trying to lift the hand car off, so injuring him that he died immediately. No one else was struck or hurt. The railroad track about this point was nearly straight for a distance of about two miles. The train had passed through the town of Ontario without a headlight, and without stopping, but it had whistled about a mile east of the town, and one of the men on the hand car says he heard a whistle just before the accident. Upon this point the witnesses do not wholly agree. The headlight on the engine was burning at Arcadia, the station east of Ontario six or seven miles, and the evidence tended to show that it was burning dimly at the first stopping place west of Ontario, three miles distant. It appeared that at that time the railroad company was gradually equipping its engines with electric headlights, and that the men found more or less difficulty in keeping the headlights burning constantly. Upon the night in question the fireman went out on the engine to fix the headlight, which had gone out, about the time the train approached the bridge east of Ontario. If it had been burning properly when the train

Digitized by Google

approached Ontario, it could have been seen two miles away. There is a serious conflict in the testimony as to whether the engine had its "blizzard lights," which are oil lights on the front end of the engine, burning that night when the train went through Ontario. Plaintiff's witnesses say they did not see them; defendant's witnesses say they were burning and in good order, and could have been seen. The rules of the company forbade the use of hand cars, except in the line of duty. Hand cars at night were also required to display red lights to the rear. It appeared from plaintiff's evidence that it was the duty of men engaged in the bridge gang, and they were instructed, to be on guard all the time for extra trains, and that this was particularly true of men engaged in work upon bridges, as it was necessary for them to obstruct the track at various places in driving piles and otherwise repairing or constructing bridges. Russell's superior testified for defendant that it was not in the line of the bridge foreman's duty to observe spurs with a view to setting cars in, and that Russell had no business on behalf of the company at any place, except where the bridge gang was at work, but that he had authority to employ and discharge men. At the conclusion of the evidence introduced by both sides, the court granted the defendant's motion to direct a verdict, based upon the grounds, among others, that the deceased was guilty of contributory negligence, and that when he was killed he was a trespasser upon the railroad tracks. Judgment was entered for the defendant, and appeal was duly perfected.

The principal assignment of error by the plaintiff is that the Circuit Court erred in not submitting the question of negligence to the jury. Counsel devotes a considerable part of his brief and argument to the contention that the case presented a question of fact for the jury to determine, from all the circumstances, whether or not the defendant company had provided suitable appliances for its train upon the night of the accident, and whether proper caution was used in running its special train through Ontario without a headlight, whether or not "marker" lights were on the engine, and whether defendant was or was not negligent in not having oil lamps at Ontario, so that, in case the electric lights went out, an oil lamp could be substituted. It is unnecessary to discuss the rule dwelt upon by counsel that ordinarily questions of negligence are for consideration by the jury, guided by proper instructions by the court as to the principles of law by which the jury should be controlled. That rule is so firmly established that it may be regarded as elementary. But it is also thoroughly well settled that a case may be withdrawn from the jury altogether and a verdict directed for plaintiff or defendant, as may be proper, where there is no dispute in the evidence, or where it is so conclusive in its character that the court, in the exercise of its sound judicial discretion, would be obliged to set aside a verdict rendered in opposition to such evidence. Delaware, etc., Railroad v. Converse, 139 U. S. 472, 11 Sup. Ct. 569, 35 L. Ed. 213. In Schofield v. Chicago & St. Paul Railway Company, 114 U. S. 615, 5 Sup. Ct. 1125, 29 L. Ed. 224, Justice Blatchford, pronouncing the unanimous opinion of the Supreme Court, said:

"It is the settled law of this court that, when the evidence given at the trial, with all the inferences which the jury could justifiably draw from it,

Digitized by Google

is insufficient to support a verdict for the plaintiff, so that such a verdict, if returned, must be set aside, the court is not bound to submit the case to the jury, but may direct a verdict for the defendant. Improvement Co. v. Munson, 14 Wall. 442, 20 L. Ed. 867; Pleasants v. Fant, 22 Wall. 116, 22 L. Ed. 780; Herbert v. Butler, 97 U. S. 319, 24 L. Ed. 958; Bowditch v. Boston, 101 U. S. 16, 25 L. Ed. 980; Griggs v. Houston, 104 U. S. 553, 26 L. Ed. 840; Randall v. Baltimore & Ohio Railroad Co., 109 U. S. 478, 3 Sup. Ct. 322, 27 L. Ed. 1003; Anderson County Com'rs v. Beal, 113 U. S. 227, 5 Sup. Ct. 433, 28 L. Ed. 966; Baylis v. Travellers' Insurance Co., 113 U. S. 316, 5 Sup. Ct. 494, 28 L. Ed. 989."

Inasmuch, therefore, as the federal courts had authority, when this action was tried, to direct verdicts under certain conditions in negligence suits, we must inquire whether, in the present case, error was committed by the lower court in holding that, as a matter of law under the evidence, Russell was guilty of contributory negligence which barred recovery, whatever negligence there may have been on the part of the railroad company. There was substantial evidence of negligence on the part of defendant's engineer in running the train at a very high rate of speed through Ontario without a headlight. The engineer must have known his light was dim or out altogether, and he ought to have slowed down or stopped at Ontario and taken new lights, or repaired the one he had. It is highly probable that, if there had been a headlight shining before the train reached Ontario, some of the men on the hand car would have seen it, and the hand car could have been removed in time to have saved Russell's life. But the failure of the engineer to fix his headlight, or to slow down, or to get other lights at Ontario, did not impose liability upon the defendant for killing the deceased, unless plaintiff has shown that when deceased was struck he was acting in the line of his duty as a servant of the company, and that by reason of such relationship and action he was rightfully upon the track, and that, therefore, the defendant owed a duty to him of having a headlight burning, and of running its train at a slower rate of speed, and of having blizzard lights burning upon the engine. The most favorable view of the case from plaintiff's standpoint is that Russell took the velocipede car in the afternoon for two purposes—one, to see about setting cars in on the spur at Washoe; the other, to see about employing Burgess for the company. These were the only reasons given for the trip to Washoe. He reached the spur about half past three in the afternoon. Now, clearly, only a most casual observation was necessary to enable the deceased to see whether there were any cars already upon the spur, and whether the track was in condition to receive cars, if he wished to have any put there for convenience in connection with his bridge repair work. No assistance was needed to make this inspection; so no delays were required. Upon this branch of the case, therefore, we have no doubt at all that the only inference that can be drawn from the evidence is that Russell made such examination of the spur as he believed was necessary before half past 3, when he went with his family to his father-in-law's house. Passing, then, to the proposed employment of men, we find that Russell may have seen the man Burgess and talked with him about work. There is no evidence at all that he did go to Burgess' house, or did see him, except Mrs. Russell's statement of the inten-

Digitized by Google

tions of her husband, as he told them to her before they reached Washoe. Burgess was not called and did not testify; nor was his absence from the trial explained in any way. But, conceding that Russell did go to see Burgess, and did see him about employment, it yet appears that Russell must have seen him in the afternoon before 5 o'clock, because Mrs. Russell positively testified that her husband ate supper with her at her father's at 5 o'clock, and that he remained with the family from that time until he left for the outfit cars—about eight o'clock or after in the night. So, from 5 to 8, or thereabouts, he was doing nothing for the railroad company, and was engaged purely in pursuit of his own affairs. Had Russell gone back to the outfit cars in the afternoon with the velocipede, as he could have, the accident would not have happened; but he preferred to stay for his own pleasure, and wait for the men who were coming down with the hand car after supper. It is undisputed that the men in the hand car reached the house of Mrs. Russell's family about 7 or shortly thereafter. Supper was over, and, as Russell's duties for the company had ended before 5 o'clock, there was nothing to prevent his immediate return with the men, and had he gone at once with them the accident could not have happened. Again he delayed his departure, and remained at Washoe for an hour or more visiting with his wife's family. When he finally started, he went without a light on the hand car. Under this evidence, the conclusion is certain that his act in remaining until 8:30 o'clock was his own, and that, in returning when and in the manner he did on the hand car, he was acting for himself. His conduct was no part, whatever, of any business relation of master and servant. It must be held, therefore, as a matter of law, that his attitude became that of a servant who voluntarily stepped wholly aside from the business of the master to do his own pleasure exclusively. Under such conditions, the master is not liable for the servant's death.

In St. Louis Southwestern Ry. Co. v. Harvey, 144 Fed. 806, 75 C. C. A. 536, the Court of Appeals of the Eighth Circuit said:

"* * * For if a servant step aside from the business of his master for never so short a time to do any act that is not a part of that business, the relation of master and servant is for the time suspended, and the acts of the servant during that interval are not his master's but his own. Benson v. Chicago, St. P., M. & O. Ry. Co., 78 Minn. 303, 307, 308, 80 N. W. 1050; Baker v. Kinsey, 38 Cal. 631, 633, 99 Am. Dec. 438; Georgia Railroad Co. v. Wood, 94 Ga. 126, 21 S. E. 288, 47 Am. St. Rep. 146.

"Nor does the fact that servants guilty of a tortious act make use of the master's cars, engines, or other facilities, which they could not have obtained in the absence of the relation of master and servant, to commit it, while pursuing their own ends exclusively, charge the master with liability for their act, in the absence of his knowledge or consent to such use. Chicago, St. P., M. O. Ry. Co. v. Bryant, 65 Fed. 969, 973–975, 13 C. C. A. 249, 253–255."

The court cites numerous decisions to sustain the rule which controlled. Cousins v. Railway Co., 66 Mo. 572; Morier v. Railway Co., 31 Minn. 351, 17 N. W. 952, 47 Am. Rep. 793; Campbell v. City of Providence, 9 R. I. 262; Garretzen v. Duenckel, 50 Mo. 104, 11 Am. Rep. 405; Chicago Consol. Bottling Co. v. McGinnis, 86 Ill. App. 38; Snyder v. Railway Co., 60 Mo. 413. To this list may be added Shadoans, Adm'r, v. C. N. O. & T. P. R. Co., 82 S. W. 567, 26 Ky.

Digitized by Google

Law Rep. 828, where it was held that where a brakeman on a freight train went into the cab of the locomotive of another train to get a drink of water, and, while there for that purpose, the two trains collided and he was killed, there could be no recovery, though the collision was due to the negligence of the railroad's servants, deceased not being in the discharge of any duty to the master.

Again, as deceased was not doing duty for the company, but was pursuing his own affairs only at the time of his death, he was not in that relationship of fellow service with the engineer or operatives of the special train which enables his administratrix to recover, relying upon the fellow servant statute of the state of Oregon, approved February 10, 1903, entitled "An act imposing upon railroad corporations liability for injury to their employees in certain cases." In Railroad Co. v. Wade, 35 South. 863, 46 Fla. 197, a wife sued for damages for the death of her husband. The deceased was killed near the eastern boundary of a village in a collision between a hand car and a locomotive. In that case the facts showed that the engine was being run backwards in the night, and it was contended that it did not have proper lights and was running at an unusual rate of speed. The deceased was employed as a member of a bridge gang, but had been discharged for the day, and had borrowed the hand car he was upon from the foreman of the crew of which he was a member. But the court held there could be no recovery, basing its decision upon the ground that the deceased at the time of the accident was not on duty, and was not a fellow servant with the trainmen, and that no relationship of master and servant existed.

In conformity with the views expressed, our opinion is that the relationship of master and servant, and that of fellow servants, and the legal principles applicable thereto, are without the case, and that consequently the action resolves itself into the ordinary one where a plaintiff seeks to recover damages for the death of a person, resulting from the fault or negligence of another. Judged from this standpoint, under firmly established principles, the plaintiff must fail, for the reason that the undisputed evidence permits of no deduction other than that deceased was guilty of fault which directly contributed to the accident which resulted in his death. A railroad company must necessarily have an exclusive right to use its tracks (subject to certain legal rights of the public at crossings), and cannot ordinarily be held responsible for a failure of its engineers to anticipate that at night, between stations and away from crossings, there are persons using hand cars upon the rails without signals of any kind. Conceding that the company in this case was negligent in some respects, as heretofore stated, nevertheless its train was lawfully upon its tracks when deceased was killed; while the deceased was negligent in using the tracks at all by going voluntarily upon them in the night, for his own business, with a hand car, and without a light. His situation was one of great peril, which carried with it all risk of safety. He ought to have used the utmost vigilance to protect himself against possible approaching trains. He was familiar with railroads, and, as a bridge foreman, knew that a special train might come very unexpectedly. Northern Pacific Railway Co. v. Jones, 144 Fed. 47, 75 C. C. A. 205.

Digitized by Google

Appellant makes the point that even if deceased was guilty of negligence, still that such negligence should not prevent recovery if it was shown that the defendant company might, by the exercise of reasonable care and prudence, have avoided the consequences of the negligence of the deceased. Inland Seaboard Coasting Company v. Tolson, 139 U. S. 551, 11 Sup. Ct. 653, 35 L. Ed. 270, and Grand Trunk Railway Co. v. Ives, 144 U. S. 408, 12 Sup. Ct. 679, 36 L. Ed. 485, are cited to sustain this argument The facts of the present case, however, render these citations inapplicable, for it was thoroughly well established on the trial that the defendant's servants in charge of the special train not only could not have anticipated that the deceased was upon the track at the point where he was killed, and in a dangerous position, but that they could not by any possible exertion have avoided the injury to the deceased after his danger was discovered. There is no question of wanton or willful negligence involved. Indeed, the engineer knew nothing at all of any danger until the collision occurred. In Northern Pacific Railway Co. v. Jones, supra, speaking through Judge Gilbert, it was pointed out that the doctrine laid down in Inland & Seaboard Coasting Company v. Tolson was applicable where the agents of the defendant knew of the presence of the injured person, and where there appeared to be reason to believe that such person was not able to avoid injury or danger; but it was distinctly held that neither of the cases just cited "intended to lay down the broad rule that no contributory negligence of the party injured will defeat his right to recover if it be shown that the defendant might, by the exercise of reasonable care and prudence, have avoided the consequences of that negligence." Nor are cases involving the duty of a railroad company at a public road crossing pertinent, as the collision where deceased was killed occurred a considerable distance west of any road or crossing.

Our conclusion upon the whole case is that the court was right in directing a verdict, and that judgment must be affirmed.

(155 Fed. 29.)

PACIFIC COAST CO. et al. v. YUKON INDEPENDENT TRANSP. CO.

(Circuit Court of Appeals, Ninth Circuit. May 6, 1907.)

No. 1,377.

1. SHIPPING—SUIT FOR DAMAGE TO CARGO—LIMITATION IN BILLS OF LADING.

Provisions of bills of lading requiring claims for loss or damage to cargo to be presented to the carrier within a stated time, and barring any suit for such loss or damage unless commenced within a further stated time, will be enforced by the courts only so far as they are reasonable under the circumstances of the particular case, and such requirements may also be waived by the carrier by his conduct.

[Ed. Note.—For cases in point, see Cent. Dig. vol. 44, Shipping, §§ 493, 496.

Limitation of owners' liability, see note to The Longfellow, 45 C. C. A. 387.]

2. SAME—WAIVER OF LIMITATION.

Libelant shipped cargo on respondent's vessel from Seattle to St. Michaels, Alaska, under a clear verbal agreement that it should be delivered on the first trip of the vessel in the spring, or as soon as the ice

Digitized by Google

was out of the harbor. When the vessel arrived the harbor was still closed by ice, and the vessel, after tendering delivery at Nome, returned to Seattle with the cargo on board, and delivered it on the next voyage. The bills of lading provided that all claims for damages should be presented to the carrier within 10 days from notice thereof, and that no action should be brought after 60 days. When the vessel decided to return from Nome with the property on board, libelant's agent served notice that a claim would be made for such damages as might result, and, when the goods were finally delivered at St. Michaels, served as specific a claim for damages as could then be made, and a more specific claim was later presented in Seattle, which respondent took under consideration, and negotiations for settlement were continued for a year before suit was brought. *Held*, that libelant had made reasonable compliance with the terms of the bills of lading as to notice, and that the delay in bringing suit was waived by the carrier by entertaining the claim and continuing negotiations for its settlement.

3. SAME—CONSTRUCTION OF BILLS OF LADING—EVIDENCE.

In construing and giving effect to the provisions of a bill of lading, the conditions and circumstances which the evidence proves were known to the parties and contemplated by them in making it are to be taken into consideration.

[Ed. Note.—For cases in point, see Cent. Dig. vol. 44, Shipping, §§ 416, 417.]

4. SAME—"DEVIATION" BY VESSEL.

A provision of bills of lading giving the vessel the right to "deviate" does not authorize her, after arriving at the port of delivery, to return to the port of shipment with the goods on board, and thence make a second voyage to the port of delivery, which is not a deviation, but an abandonment of the voyage so far as relates to such shipment.

5. SAME—BREACH OF CONTRACT OF AFFREIGHTMENT.

Libelant contracted with respondent for the carriage of goods from Seattle to St. Michaels, Alaska. It was fully understood that libelant intended to market the goods along the Yukon river as soon as the ice went out, and that it had a vessel awaiting at St. Michaels for the purpose. It was agreed that the goods should be taken on the first trip of respondent's vessel north, and should be delivered as soon as the ice was out of the harbor at St. Michaels, which was known to be usually about the 1st of July. Libelant refused to ship without such agreement. The bills of lading, which were issued after the cargo was on board, provided that in case the vessel should be prevented by stress of weather or otherwise from entering the port of delivery, the carrier might convey the property to the nearest or other port, and thence return it to the port of delivery by the same or other vessel, subject to the contract for the original voyage and at the risk of the owner. The vessel reached St. Michaels June 20th, and, finding the harbor filled with ice, returned to Nome, and there tendered delivery at ship's tackle, which being refused she returned to Seattle, and delivered the goods at St. Michaels on her next trip on July 19th. The ice went out of the harbor about July 1st. *Held*, that the vessel was bound by the contract of affreightment to wait until the ice went out or to transship the goods at Nome to be delivered at St. Michaels as soon as the harbor was free, at her own expense, and that she was liable for the damages caused by her breach of contract.

6. SAME—LIMITATIONS OF LIABILITY IN BILLS OF LADING—EFFECT OF ABANDONMENT OF VOYAGE.

In such case provisions of the bills of lading that the carrier should not be required to deliver at any particular time or to meet any particular market, and limiting its liability for damage to cargo, were applicable only to the original voyage, and it lost the benefit of them when it deliberately abandoned such voyage.

Digitized by Google

7. SAME—CONTRACT OF AFFREIGHTMENT—BILLS OF LADING.

A parol contract for the shipment of goods, pursuant to which they were laden on board, may be shown to affect the construction of bills of lading signed and delivered after the goods were loaded and when the vessel was about to sail, and, in order that provisions of such bills shall override the prior agreement, the burden rests on the carrier to show that they were called to the attention of the shipper and assented to by him.

Appeal from the District Court of the United States for the Northern Division of the Western District of Washington.

The appellee caused the steamship Senator to be libeled because of the breach of a maritime contract for the carriage of goods upon the steamship Senator from Seattle, consigned to the steamer Monarch at St. Michaels, at the mouth of the Yukon river. The goods consisted of a large quantity of merchandise, including perishable articles. The contract was made after negotiations between the representatives of the appellee and the appellants, with the understanding that the goods were intended for early sale in the Yukon river markets, and that the delivery was to be made as soon as the Senator should arrive at St. Michaels, or as soon as navigation was open in that harbor. The shipments were made about the end of May, 1901, and the voyage was the first of the season. It was known by the contracting parties that uncertainty existed as to whether the harbor of St. Michaels would be free of ice on the steamship's arrival, and that usually the harbor was not accessible before about the 1st of July. The Senator, on her way to St. Michaels, arrived at Nome on June 16th. After discharging two-thirds of her cargo at that port, she proceeded with the remainder, which was the merchandise consigned to the Monarch, and arrived off Golovin Bay on the morning of June 20th. Golovin Bay was found to be filled with ice, and, after cruising up and down off the face of the ice and making attempts to force a passage through it to St. Michaels, the Senator on the morning of the 21st returned to Nome, and there her master offered to a representative of the appellee to make delivery at ship's tackle. This offer was declined. The Senator then left Nome for Seattle, and reached that port on July 3d. On July 7th she departed from Seattle on a second voyage, having the appellee's cargo still on board. She went to Nome and thence to St. Michaels, where she discharged the cargo to the steamer Monarch on July 19th. The ice had left the St. Michaels Harbor about July 1st, and, if the Senator had remained off that port on her first voyage until July 2d, she could then have entered the harbor and discharged the cargo. The suit was brought to recover damages for loss on the goods and delay to the steamer Monarch. The District Court held that the Senator, by returning to Seattle without making delivery on the first voyage, made a breach of the contract of affreightment, and held the appellants liable to damages in the sum of $12,119.75, of which $4,119.75 was for loss on the goods, and $8,000 was for the delay of the steamer Monarch. The bills of lading contain the following provisions:

"Shipped by ———— per Pacific Coast Steamship Co. (hereinafter called carrier), to be forwarded per Steamer Senator or per some other of the carrier's steamers, or per some other steamer or steamers in the employ of said carrier, the articles or property enumerated hereon in apparent good order, except when otherwise noted, the value, weight, quantity, quality and condition of contents being unknown to said carrier, to be forwarded with as reasonable dispatch as the general business of the carrier will permit, and delivered at vessel's tackle at the port, place or landing of St. Michaels in like apparent good order (but with the option to the master to carry the property on deck, to deviate and to lighter, surf, transship, land and reship the said property or any thereof and to stop and land and receive passengers and freight at intermediate ports or places)."

"The property shall be received by the consignees thereof at the vessel's tackle immediately on arrival of the vessel at the port or place of delivery, without regard to weather; if the consignee is not on hand to receipt the property as discharged, then the carrier may deliver it to the wharfinger, or other party or person believed by said carrier to be responsible, and who will

Digitized by Google

take charge of said property and pay freight on same, or the same may be kept on board or landed and stored in hulks, or put in lighters by the carrier, at the expense and risk of the owner, shipper or consignee, and at his or their risk of any nature whatever."

"And further, that in case the vessel should be prevented by stress of weather or other cause from entering the port or place of delivery, or from discharging the whole or any part of her cargo there, the said property may, at the option of the master or agent, be conveyed upon said vessel to the nearest or other port, and thence returned to the port of delivery by the same or other vessel, subject to all the provisions of this contract in regard to the original voyage, and at the risk of the owner, shipper or consignee of said property."

"The carrier shall not be required to deliver the property at the port of delivery at any specific or particular time, or to meet any particular market."

"If in the judgment of the master of carrier's steamer it shall be impracticable or unsafe to land this freight at Nome on account of ice or weather, carrier may return same at owner's risk. On freight so returned same charges to be paid as if landed at Nome, but with no additional freight charge for returning to Seattle."

The evidence showed that the negotiations for the shipment of the cargo commenced as early as May 12, 1901. H. V. V. Bean, manager of the appellee, called on C. W. Miller, assistant general agent of the Pacific Coast Steamship Company at Seattle, and asked for freight rates for the first voyage of the Senator to St. Michaels, and informed him that, if the goods were taken, delivery must be made on the first voyage, as it was desired to reach the early market on the Yukon river. Mr. Miller replied that the ice might not be out of the St. Michaels Harbor when the steamer arrived, to which Mr. Bean replied that he wanted it understood that delivery must be made at St. Michaels on that voyage, and that otherwise the goods would not be shipped. After that conversation there were others, in which Mr. Miller was informed that the goods were largely perishable, and that the steamer Monarch was to come down the Yukon river to receive them at St. Michaels. He finally sent word to an agent of the appellee that he would take the goods and make delivery on the first trip of the Senator. It was arranged that Geo. R. Fisher, a representative of the appellee, should accompany the vessel to direct the delivery. After the vessel had arrived off the port of St. Michaels, and had remained there about thirty hours, the master told Fisher that he did not know how long he might have to wait, that he could not afford to remain there, and that he would have to take the goods back, but he offered to remain there two days if the appellee would pay the sum of $500 a day for the time of such delay. This Fisher declined, and he demanded delivery at St. Michaels. The evidence was that there was no danger or difficulty in remaining there if a good lookout were kept. The master testified that to remain outside the ice, but in the vicinity would not have subjected the ship to any particular danger, but it would have subjected her to a great deal of detention. The testimony was that on returning to Nome, on June 21st, the master, after consulting the appellant's agent there, offered to make delivery of the cargo at ship's tackle at that port, the appellee to pay lighterage charges and cost of transportation of the cargo thence to St. Michaels. This was refused.

Samuel H. Piles, James B. Howe, and Charles H. Farrell, for appellants.

Richard A. Ballinger, James T. Ronald, Alfred Battle, Albert J. Tennant, and Ira A. Campbell, for appellee.

Before GILBERT and ROSS, Circuit Judges, and HUNT, District Judge.

GILBERT, Circuit Judge, after stating the case as above, delivered the opinion of the court.

It is assigned that the District Court erred in not dismissing the libel for the failure of the appellee to present its claim within the 10-day

Digitized by Google

period prescribed in the bills of lading, and for its failure to begin the suit within 60 days thereafter, as required by the bills of lading. The bills of lading provided that:

"All claims for damages to or loss of any property to be presented to the carrier within ten days from the date of notice thereof (the arrival of the vessel at port or place of discharge or the knowledge of stranding or loss of vessel to be deemed notice), and that after sixty days from such date no action, suit or proceeding in any court of justice shall be brought for any damage to or loss of said property; and that failure to present such claim within said ten days, or to bring suit within said sixty days, shall be deemed a conclusive bar and release of all right to recover against the vessel or its master, said carrier or any of the stockholders thereof, for any loss or damage."

The binding force of such a stipulation is recognized by the courts, provided that thereby a reasonable time is given to comply with its conditions. The Queen of the Pacific, 180 U. S. 49, 21 Sup. Ct. 278, 45 L. Ed. 419; Ward v. Mo. Pac. Ry. Co., 158 Mo. 226, 58 S. W. 28; Soper v. Pontiac, etc., R. Co., 113 Mich. 443, 71 N. W. 853. In the case of The Queen of the Pacific, the court said:

"It is unnecessary to say that if, under the circumstances of a particular case, the stipulation were unreasonable or worked a manifest injustice to the libelants, we should not give it effect."

In the Westminster (D. C.) 102 Fed. 366, it was said that the purpose of the claim of loss is to notify the carrier that the goods have been injured, and that it is charged with liability therefor. The evidence is that when the master of the Senator and the agent of the appellants at Nome decided to abandon the first voyage, and return to Seattle without delivering the goods at St. Michaels, the appellees served notice upon them that claim would be made for any loss that might result from such delay. At that time it was impossible for the appellee to state even approximately the loss which it would sustain. At the time when the goods were, on the second voyage, delivered to the Monarch, Mr. Bean protested against their condition, both to the master and to the appellants' agent, and served upon them as specific a claim for damages as could then be made. The extent of the damage to the goods was not known, and could not be known, until afterwards, and when the Monarch had made two round trips on the river and disposed of the goods. Thereafter Mr. Bean came out from Alaska, and a further claim, specifying the damages, was presented to the appellants' agent in Seattle. The agent made answer that the claim would have to be sent to the appellants' office in San Francisco and there be taken up. This was in October, 1901. Thereafter until October 8, 1902, negotiations were carried on between the parties looking to a settlement of the loss, during which the appellants gave no answer to the demand of the appellee, save to object to the amount thereof as unreasonable. On October 8, 1902, the suit was commenced. It is well settled that the requirement as to the presentation of such a claim, and the institution of suit to enforce the same within the time specified in the contract, may be waived by the carrier by entertaining the same and negotiating concerning its adjustment. Soper v. Pontiac, etc., R. Co., 113 Mich. 443, 71 N. W. 853; Hudson & Co. v. N. P. Ry. Co., 92 Iowa, 231, 60 N. W. 608, 54 Am. St. Rep. 550; Wabash Ry. Co. v. Brown,

Digitized by Google

152 Ill. 484, 39 N. E. 273; Watch Case Co. v. Express Co., 120 N. C. 351, 27 S. E. 74; Wood v. Southern Ry. Co., 118 N. C. 1056, 24 S. E. 704. Upon the evidence in the case, we find no error in the refusal of the District Court to dismiss the cause for the appellee's failure to comply with that provision of the contract of affreightment.

It is assigned as error that the District Court disregarded certain provisions of the bills of lading, for the reason that they were printed in type so small as to be unreadable by persons having only ordinary powers of vision, and this in the face of the fact that the appellee made no showing or contention that the bills of lading were not read or understood or assented to when received. Upon a careful inspection of the rulings and opinion of the court, we find no basis for this assignment of error. It is true that in the opinion the court alluded to the fact that certain provisions of the bills of lading were printed in type so minute as to be illegible by persons of ordinary vision, but we do not discover that on that ground any portion of the bills of lading was rejected. The court said:

> "For this reason the courts are compelled, when called upon to enforce them, to construe such contracts fairly, and to reject stipulations which are unreasonable, and to deny carriers all unfair advantages claimed by reason of exemptions from liability for negligence or plain violation of the carrier's obligation. In order to give a fair construction to a contract, all its parts must be considered, and conditions and circumstances which the evidence proves were known to the parties and contemplated by them in making it."

This doctrine is well sustained by the authorities, and is applicable to bills of lading, no matter in what kind of type they are printed. In Marx v. National Steamship Co. (D. C.) 22 Fed. 680, Judge Brown thus expressed the recognized rule of construction:

> "In construing bills of lading, as in construing other commercial instruments, it is the right and duty of the court to look, not only to the language employed, but to the subject-matter and to the surrounding circumstances, in order to determine the proper effect of the language used, by putting itself so far as possible in the place of the contracting parties."

Did the court err in construing the contract? The appellants contend that it was error to hold that the Senator, after having attempted and failed to make an entrance through the ice into the harbor of St. Michaels, did not have the right to proceed to Nome, and thence back to Seattle, and from that port to return to St. Michaels, and that to do so constituted a deviation not permitted by the bills of lading. The bills of lading authorized the steamship to deviate, but it is very clear, we think, that after arriving at the port of delivery to return to the port of shipment, and thence make a second voyage to the port of delivery, is not a deviation as that term is used and understood in maritime law. Deviation is variously defined. Generally speaking, it is a voluntary departure without necessity or reasonable cause from the regular and usual course of the voyage. 14 Cyc. 282; Hostetter v. Park, 137 U. S. 30, 11 Sup. Ct. 1, 34 L. Ed. 568; Constable v. National Steamship Co., 154 U. S. 51, 14 Sup. Ct. 1062, 38 L. Ed. 903. By returning to Seattle from Nome, the Senator abandoned her voyage, so far as it concerned the appellee, and, when she subsequently carried the goods to the port of delivery, it was by a sec-

Digitized by Google

ond voyage, and not by the voyage contemplated in the contract. The bills of lading, while they gave the right to deviate, contain special provision as to the permissible course of the appellants in the event that stress of weather or other cause should prevent the entrance of their vessel into the port of delivery. It provided that, in such a case, the cargo might, at the option of the master or agent, be conveyed upon said vessel to the nearest or other port, and thence returned to the port of delivery by the same or other vessel, subject to all the provisions of the contract in regard to the original voyage, and at the risk of the owner, shipper, or consignee. By this provision, the appellants were given the right, under the circumstances disclosed in the evidence, to carry the goods from off St. Michaels Harbor to Nome, and thence to carry them back to St. Michaels or to ship them to that port upon another vessel. They pursued neither course. They offered to deliver the goods to the appellee at Nome, but at ship's tackle, and they declined to assume the expense of lighterage or carriage to St. Michaels. The offer was not a compliance with the obligation of the contract, by the terms of which the appellants were bound to deliver the goods of St. Michaels at their own expense, notwithstanding the provision that the carriage from Nome to St. Michaels was to be at the owner's risk. In Luduc v. Ward, 20 Q. B. Div. 475, Lord Esher, M. R., said:

"In the present case liberty is given to call at any ports in any order. It was argued that that clause gives liberty to call at any port in the world. Here, again, it is a question of the construction of a mercantile expression used in a mercantile document, and I think that as such the term can have but one meaning, namely, that the ports, liberty to call at which is intended to be given, must be ports which are substantially ports which will be passed on the named voyage."

A well-considered case in point is Swift & Co. v. Furness, Withy & Co. (D. C.) 87 Fed. 345. In that case the libelant shipped fresh beef from Boston to London, under bills of lading which gave the vessel liberty to make deviation and to call at any intermediate port or ports for any purpose. The bills of lading also provided that the beef was to be shipped wholly at the risk of the shipper, and that the owners of the vessel assumed no responsibility whatever therefor during the voyage, and were not to be held liable for loss or damage thereto. The voyage ordinarily took from 14 to 16 days. On arriving at Dover the ship was ordered to go to Havre and discharge part of her cargo. From Havre she went to Flushing, Holland, thence back to London, where she arrived several days later, with the beef in a damaged condition. The court, in denying the vessel exemption from liability on the ground that her deviation was permissible under the bills of lading, said:

"Under both bill of lading and marine insurance policy, reasonable, necessary, and contemplated deviations are permitted. Unreasonable, unnecessary, and arbitrary deviations are held breaches of contract. The clause providing that 'meat is to be shipped wholly at the risk of the shipper, and that the owners assume no responsibility therefor during the voyage,' etc., does not afford the carrier protection for damage arising after the vessel was diverted from her voyage, and sent upon what must be regarded as an additional and independent voyage to Havre and Flushing. This clause refers to the voyage contemplated by the parties, and to deviations reasonably incident thereto, not to an additional voyage arbitrarily made by the order of the owner."

Digitized by Google

The case at bar presents stronger ground, for the application of that doctrine than did the case in which it was announced.

The clause of the bills of lading providing that if, in the judgment of the master of the steamship, it should be impracticable or unsafe to land freight at Nome on account of ice or weather, the freight might be returned to Seattle, does not avail the appellants in the present case, whether that provision be regarded as a part of a printed form applicable only to consignments of freight from Seattle to Nome and therefore not pertinent to the present contract, or whether it be regarded as a provision of the contract intended for the protection of the steamship in the event of her return to Nome after an unsuccessful attempt to reach anchorage ground at St. Michaels. In either view, it is the expression of the whole of the intention of the parties as to the right of the vessel to return to Seattle without delivering the goods. It is inapplicable here for the reason that, in fact, it was not impracticable or unsafe to land freight at Nome on account of either ice or weather. In the light of the circumstances attending the execution of the contract, and the provisions of the bills of lading, we think it is clear that the appellants were under obligation to deliver the goods upon their own or another vessel at St. Michaels as soon as that harbor was free from ice. The appellants could have been absolved from that obligation only upon the occurrence of an unforeseen event. It was not unforeseen that the vessel might be delayed on account of the ice. It was well known to both the contracting parties that the ice rarely left St. Michaels Harbor before the 1st of July. The contract was made with special reference to that contingency. The necessity of the delay or of transshipping the goods at Nome was fairly within the intention of the agreement, and the risk thereof must be presumed to have been compensated for by the freight money which the appellants received.

It is contended that the District Court erred in holding the appellants liable for damage for the decay of perishable goods when the bills of lading provided that they should not be responsible for the decay of perishable articles or damage to any article "arising from the effect of heat or cold, sweating, or fermentation." The answer to this contention is that the limitations of liability expressed in the bills of lading were applicable only to the voyage contemplated in the contract. They do not relieve the carrier from liability for damages resulting from the delay occasioned by the abandonment of the voyage and the return of the vessel to Seattle. 6 Cyc. 383; Balien & Son v. Jolly, Victoria & Co., Ltd., 6 T. L. R. 345; Luduc v. Ward, 20 Q. B. D. 475. In the latter case the court said:

> "It follows that when the defendant's ship went off the ordinary track of a voyage from Fiume to Dunkirk to a port not on the course of that voyage, such as Glasgow, there was a deviation, and she was then on a new voyage, different from the one contracted for, to which the excepted perils clause did not apply, and therefore the ship owner is responsible for the loss of the goods."

It is contended, further, that there was error in holding the appellants liable for delay in delivering the goods, and in allowing demurrage to the Monarch contrary to the provision in the bills of lading that the

Digitized by Google

carrier shall not be required to deliver property at the port of delivery at any specified or particular time or to meet any particular market. The foregoing considerations and the authorities just quoted are applicable also to this provision of the bills of lading, and to the further clause thereof, providing that claim for loss or damage to any of the property shall be restricted to "the cash value of the same at the port of shipment at the date of shipment unless otherwise agreed." The benefit of all of these provisions was forfeited by the appellants by their act in causing the Senator to return to Seattle without making delivery of the goods on the voyage upon which they were to have been delivered. For breach of that contract the appellee was entitled to damages for the loss of the market, with a view to which the contract was made. Mobile & Montgomery R. Co. v. Jurey, 111 U. S. 584, 4 Sup. Ct. 566, 28 L. Ed. 527; The Arctic Bird (D. C.) 109 Fed. 167; Port Blakeley Mill Co. v. Sharkey, 102 Fed. 259, 42 C. C. A. 329.

The appellants earnestly contend that the court erred in admitting evidence of a prior parol agreement between the parties which tended to modify the terms of the bills of lading. The evidence so admitted tended to prove the negotiations antecedent to the shipment and the common understanding that the appellants intended to take advantage of the market prices prevailing at points on the Yukon river at the opening of navigation. It tended to show that the probable presence of ice in the St. Michaels Harbor was contemplated, and that the contract was made with the special understanding that delivery was to be made as soon as the harbor was free from ice. It showed, also, that the bills of lading were signed late at night, and at about the last minute before the boat went out. All of this evidence was admitted for the purpose, not of modifying the provisions of the bills of lading, but of showing the intent and purpose of the contracting parties, and aiding the court to construe the bills of lading with reference to that intent. The bills of lading were printed forms applicable to different consignments of goods to different ports. In Hutchinson on Carriers (3d Ed.) § 622, it is said:

> "But the main object and intent of the contract is the voyage agreed upon, and, while the printed general words must not in construing a contract be discarded, it is well recognized that, when considering what the main object and intent of the contract is, it is proper to bear in mind that a portion of each is on a printed form applicable to many voyages, and is not especially agreed upon in relation to the particular voyage."

See, also, Marx v. National S. S. Co. (D. C.) 22 Fed. 680; Mobile & Montgomery R. Co. v. Jurey, 111 U. S. 584, 4 Sup. Ct. 566, 28 L. Ed. 527.

But if, indeed, the parol testimony so admitted in evidence did have the effect to modify some of the provisions of the bills of lading, it was, under the circumstances disclosed in this case, admissible for that purpose, for the bills of lading were issued after the goods had been delivered on board the Senator, and after they had passed from the control of the shipper, and the vessel was about to go on her way. The burden was then upon the carrier to show that its agents directed attention to the terms of the bills of lading and that the shipper assented

Digitized by Google

to them. The Arctic Bird (D. C.) 109 Fed. 167; Bostwick v. B. & O. R. Co., 45 N. Y. 712; Strohm v. Detroit & M. Ry. Co., 21 Wis. 562, 94 Am. Dec. 564; Mo. Pac. Ry. Co. v. Beeson, 30 Kan. 298, 2 Pac. 496; Michigan Central R. R. Co. v. Boyd, 91 Ill. 268.

We find no error for which the decree should be reversed. It is accordingly affirmed.

(155 Fed. 38.)

ROSENCRANZ v. UNITED STATES.

(Circuit Court of Appeals, Ninth Circuit. May 20, 1907.)

No. 1,404.

1. CRIMINAL LAW — JURISDICTION OF OFFENSE — OFFENSES AGAINST UNITED STATES AND MUNICIPALITY.

Under the rule that when a court has jurisdiction of a crime a statute which merely confers the same judisdiction on another court, or authorizes a municipality to define and punish the same act, does not deprive the first court of its jurisdiction unless there is an express provision or clear implication to that effect, Act April 28, 1904, c. 1778, 33 Stat. 529, conferring power on municipalities in Alaska to prohibit certain things and punish the same as misdemeanors, and which repeals all prior acts and parts of acts inconsistent therewith, although acted upon by a town, does not affect the jurisdiction of the District Court over prosecutions for the same acts which are made offenses by Carter's Alaska Code March 3, 1899, c. 429, 30 Stat. 1253, there being no inconsistency between the dual jurisdictions.

[Ed. Note.—For cases in point, see Cent. Dig. vol. 14, Criminal Law, § 176.]

2. SAME—INDICTMENT—ABOLITION OF DISTINCTION BETWEEN ACCESSORY AND PRINCIPAL.

Under Pen. Code Alaska, §§ 186, 188, which abolish the old distinctions between principal and accessory before the fact, one who aids and abets another in the commission of a crime may be charged in the indictment and convicted as a principal.

[Ed. Note.—For cases in point, see Cent. Dig. vol. 14, Criminal Law, § 103.

Prosecution and punishment of accessories, see note to 44 C. C. A. 326.]

3. DISORDERLY HOUSE—ELEMENTS OF OFFENSE—LETTING PREMISES FOR BAWDY-HOUSE.

An owner of property, or an agent of such owner, who knowingly rents the same to another to be used as a bawdyhouse, the keeping of which is a misdemeanor, aids and abets the commission of the offense, and under Pen. Code Alaska, § 188, which provides that in misdemeanors there are no accessories, is punishable as a principal.

[Ed. Note.—For cases in point, see Cent. Dig. vol. 17, Disorderly House, § 6.]

4. JURY—COMPETENCY OF JURORS—BIAS AND PREJUDICE.

The examination of jurors on their voir dire in a criminal case *held* to have disclosed such a state of mind on their part as to render the overruling of challenges by defendant for actual bias an abuse of discretion, where each disclosed that he had a fixed opinion that the defendant was guilty, and, while one thought he could lay his opinion aside "if the evidence showed he was not guilty," another stated that his was a strong opinion which he would not be able to rid himself of.

[Ed. Note.—For cases in point, see Cent. Dig. vol. 31, Jury, §§ 461–479.]

In Error to the District Court of the United States for the Second Division of the District of Alaska.

Digitized by Google

Mose Rosencranz, plaintiff in error, was indicted under the code of Alaska for the crime of keeping a bawdyhouse. The indictment, in its direct charging part, is as follows: "The said Rosencranz within two years last past, to wit, on the 30th day of September, nineteen hundred and six, in the district aforesaid, did wrongfully and unlawfully keep and set up a house of ill fame, brothel, and bawdyhouse, for the purpose of prostitution, fornication, and lewdness, the same being that certain apartment, being the fourth apartment east of the westerly line thereof on the southerly end of lot 46, block 19, according to the town-site plat thereof, contrary to the form of the statute in such case made and provided, and against the peace and dignity of the United States." Rosencranz interposed a plea in abatement, alleging that the municipal court in and for the city of Nome, Alaska, had exclusive jurisdiction of the offense charged in the indictment, and that the District Court of the United States for the District of Alaska, Second Division, had no jurisdiction. He also filed a demurrer to the indictment, based upon the ground that the grand jury had no legal authority to inquire into the crime charged, and that the indictment did not conform to the requirements of chapter 7 of title 2 of the act of Congress entitled "An act to define and punish crimes in the District of Alaska and to provide a Code of Criminal Procedure for said district" (Act March 3, 1899, 30 Stat. 1253, c. 429); and that the facts stated in the indictment do not constitute a crime. The court overruled the plea and the demurrer. Trial was had. At the close of all of the evidence, plaintiff in error moved the court to direct a verdict of not guilty. This motion was based upon the principal ground that the indictment did not allege a crime under the laws of Alaska, and that the evidence failed to show that plaintiff in error had acted as agent, owner, proprietor, or lessor, or that he had knowledge of the use to which the property had been put. This motion was overruled. Plaintiff in error was convicted, and sentenced to imprisonment for one year. He prosecutes this writ of error to review the proceedings and rulings of the lower court, and to set aside the judgment of conviction.

James W. Bell, C. D. Murane, Hobbes & Bell, W. H. Bard, James E. Fenton, and Albert Elliot, for plaintiff in error.

Henry M. Hoyt, U. S. Atty., for defendant in error.

Before GILBERT and ROSS, Circuit Judges, and HUNT, District Judge.

HUNT, District Judge. The first contention of the plaintiff in error is that the District Court of Alaska had no jurisdiction because by the act of Congress approved April 28, 1904 (33 Stat. 529–534 c. 1778), which was "An act to amend and codify the laws relating to municipal corporations in the District of Alaska," Congress conferred upon municipal corporations in Alaska the power to prohibit gambling, houses of ill fame, and other misdemeanors, and to prescribe the punishment therefor, and that thereby it repealed section 127 of the act of Congress approved March 3, 1899 (Carter's Code), providing for the prosecution and punishment of such offenses in the District Courts of the territory. The particular clause of the act of April 28, 1904, which is relied upon by plaintiff in error, reads as follows:

"Sec. 8: That all acts and parts of acts inconsistent with this act are, to the extent of such inconsistency hereby repealed: and the provisions of this act shall apply to and govern all municipal corporations heretofore created in the District of Alaska." 33 Stat. 534.

It is established by the plea filed by plaintiff in error that the city council of Nome did on August 1, 1904, pass an ordinance making it a misdemeanor to set up or keep a house of ill fame or bawdyhouse for

Digitized by Google

the purpose of prostitution. The argument is that Congress intended to vest in the municipal authorities exclusive jurisdiction of the misdemeanors mentioned, and that the purpose was to prevent a conflict between the federal and local authorities within the limits of incorporated towns. To support this reasoning plaintiff in error cites decisions by the Supreme Courts of California and Missouri. But upon examination of the principal case relied upon, Green v. Superior Court, 78 Cal. 556, 21 Pac. 307, 541, we find that it is really inapplicable. That was an application for a writ of prohibition by Green, who was indicted in the superior court of the city and county of San Francisco for conspiracy. The writ was sought upon the ground that inasmuch as conspiracy was punished by imprisonment not exceeding one year, or by fine not exceeding $1,000, or by both, jurisdiction was exclusively in the police court of the city and county of San Francisco. The Constitution of the State of California provided that the superior courts should have jurisdiction in all criminal cases amounting to felony, and cases of misdemeanor not otherwise provided for. By further constitutional power the Legislature was authorized to fix the jurisdiction of inferior courts created by it in pursuance of the Constitution; and an act was passed which prescribed the jurisdiction of the police court of the city and county of San Francisco, wherein it was provided that the police court should have jurisdiction of misdemeanors of a certain class, which included conspiracy. The court held that the jurisdiction had become exclusive in the police court because the Constitution had plainly conferred jurisdiction in the superior courts only until otherwise provided for, and that, inasmuch as other provision has been made, the authority of the superior court ended, as it was meant it should end under the provisions of the Constitution. It will be understood, therefore, that the decision turned upon the terms of the Constitution of the state, which indicated an intention that there should be jurisdiction in the one court. In the course of the opinion, however, the court expressly recognized the rule as a well-established one that where jurisdiction is given either by Constitution or statute to two different courts, not indicating whether such jurisdiction shall be exclusive or concurrent, the same may be regarded as concurrent in both courts, although the case then before the court was not brought within the operation of the rule, for reasons already indicated. So far, therefore, as the opinion is pertinent at all to questions of jurisdiction involved in the present case, it is but one of the many decisions which recognize the principle that, when a court has jurisdiction of a crime, a statute which merely confers the same jurisdiction on another court does not deprive the former court of its jurisdiction, unless there is an express provision or clear implication to that effect. The consequence is that concurrent jurisdiction is conferred. 12 Cyc. p. 199; State v. Nichols, 60 Atl. 763, 27 R. I. 69; Moren v. Commonwealth, 76 S. W. 1090, 116 Ky. 859. This principle is thus stated by Cooley in his Constitutional Limitations, p. 279:

"Nor will conferring a power upon a corporation to pass by-laws and impose penalties for the regulation of any specified subject necessarily supersede the state law on the same subject; but the state law and the by-law may both stand together if not inconsistent. Indeed, an act may be a penal offense under the laws of the state, and further penalties under proper legis-

Digitized by Google

lative authority be imposed for its commission by municipal laws. And the enforcement of the one would not preclude the enforcement of the other."

Among the well-considered decisions in accord with Cooley's text are: Ogden v. City of Madison, 111 Wis. 413, 87 N. W. 568, 55 L. R. A. 506, where it was held that where the keeping of a house of ill fame was made a misdemeanor by state law, so that one accused of doing so was entitled to a jury trial, it did not prevent a municipality from imposing a penalty for a like offense which could be enforced without a jury trial; McInerney v. City of Denver et al., 29 Pac. 516, 17 Colo. 302, where petitioner was convicted of keeping open a tippling house in violation of a city ordinance, and it was held that, although by general statute of the state the act was made a misdemeanor, yet the Legislature could delegate power to municipal corporations to adopt and enforce ordinances on matters of special local importance, even though general statutes exist relating to the same subject, and both could be given effect; Territory v. Guyott, 9 Mont. 46, 22 Pac. 134, where an act of the territory of Montana which made it a felony to sell liquor to an Indian was held to be constitutional, though Congress had passed a statute making the act a crime; and Town of Van Buren v. Wells, 14 S. W. 38, 53 Ark. 368, 22 Am. St. Rep. 214, where a conviction under a state law for carrying concealed weapons was held not to be a bar to a prosecution for the same act under a city ordinance. It was also decided in U. S. v. Wells, 2 Cranch, C. C. 45, Fed. Cas. No. 16,662, that a by-law of Georgetown prescribing a penalty for keeping a public gaming table did not supersede nor repeal a general law of Maryland prescribing a penalty for keeping a faro table in a house occupied by a tavern keeper; and in U. S. v. Holly, 3 Cranch, C. C. 656, Fed. Cas. No. 15,381, Judge Cranch ruled that it was not to be supposed that a power to pass by-laws to prohibit gambling, conferred upon the city of Washington, was to be regarded as an exclusive power bestowed. As we look at the question, Congress, in conferring power upon the municipalities of Alaska to prohibit houses of ill fame, gambling, disorderly conduct, and other offenses, and in conferring the further power upon the municipalities to define such offenses and to prescribe the punishment therefor, intended to bestow a larger measure of local self-government upon municipalities in respect to the regulation of certain matters usually brought under the police power as subjects of local municipal regulations; but in delegating such power we do not think that it was meant that Congress should surrender its own right of control over the subjects enumerated in the act of April 28, 1904, supra. There is no inconsistency between the dual jurisdictions; and, as the repealing provision of section 8, supra, only went to the extent of inconsistencies between the later and earlier legislation, both acts must be sustained, and effect must be given to both. We therefore hold that the District Court was correct in denying the several pleas and motions which were made to test the jurisdiction of the court.

The next contention of plaintiff in error is that the court should have directed a verdict of acquittal because of a fatal variance between the indictment and the proof, in that the charge is that plaintiff in error did unlawfully keep and set up a house of ill fame for pur-

Digitized by Google

poses of prostitution, whereas the evidence merely tended to establish that plaintiff in error owned the premises and received rental therefor from a woman who used the place for purposes of prostitution. Under section 186 of the Penal Code of Alaska, all persons concerned in the commission of a crime, whether it be felony or misdemeanor, or whether they directly commit the act constituting a crime or aid in the commission, though not present, are principals, and are to be tried and punished as such, and, by section 188, in misdemeanors there are no accessories. Plaintiff in error argues, however, that the particular acts which establish that a defendant aided and abetted the crime, and thus became in law a principal, must be pleaded in the indictment. To support this position he relies upon People v. Campbell, 40 Cal. 129, and State v. Gifford, 19 Wash. 464, 53 Pac. 709. These two cases hold that while it is proper to indict, try, and punish an accessory as a principal, yet that the particular acts which establish that he aided and abetted the crime, and thus became in law a principal, must be stated in the indictment. But in People v. Outeveras, 48 Cal. 19, the case of People v. Campbell, supra, was distinguished and in effect overruled, the court distinctly holding that principals in the second degree and accessories before the fact are all deemed chief actors under statutes generally similar to those in Alaska; that is, they are principals in the first degree in the commission of the crime, and are to be indicted, tried, and punished as such principals. The decision was put upon the ground that the statutes have abolished distinctions between accessories before the fact and principals, and that there is no variance between proofs and allegations if the charge is against one as principal, yet the evidence discloses that he is what has been called an accessory, for the law has declared that the aiding and abetting shall make the offender guilty as a principal, and that he may be charged accordingly. And in the later case of People v. Rozelle, 78 Cal. 84, 20 Pac. 36, the court reaffirmed the doctrine of People v. Outeveras, supra, again overruling People v. Campbell, supra. The case of State v. Gifford, supra, supporting plaintiff in error, was also expressly held to be against the current of recent authorities by the Supreme Court of Montana (State v. Geddes, 22 Mont. 68, 55 Pac. 919), where the earlier decision of the Supreme Court of Washington (State v. Duncan, 35 Pac. 117, 7 Wash. 336, 38 Am. St. Rep. 888), was cited with approval. See, also, People v. Bliven, 112 N. Y. 79, 19 N. E. 638, 8 Am. St. Rep. 701; Bishop's New Cr. Law, § 674; State v. Kent, 62 N. W. 631, 4 N. D. 577, 27 L. R. A. 686; State v. Rowe, 104 Iowa, 324, 73 N. W. 833; State v. Comstock, 46 Iowa, 265; People v. Chapman, 62 Mich. 280, 28 N. W. 896, 4 Am. St. Rep. 857; Boggus v. State, 34 Ga. 275; Stevens v. People, 67 Ill. 587; State v. Jones, 83 N. C. 605, 35 Am. Rep. 586; 1 Enc. Pl. & Pr. 69, 70; 1 Sup. Enc. Pl. & Pr. 14. In State v. Steeves, 43 Pac. 947, 29 Or. 85, the Supreme Court of Oregon passed upon the question now under consideration. A defendant was there jointly indicted with one Kelly for the crime of murder in the first degree. Defendants had separate trials. The defendant Steeves was not present at the killing, but the evidence showed that he counseled and procured his codefendant to kill the

Digitized by Google

deceased. It was insisted by defendant that, inasmuch as he was charged with the overt act and not as an accessory, his constitutional right to be informed of the nature and cause of the accusation against him was invaded, and that he could not tell by an inspection of the charge that an attempt would be made to prove he was an accessory before the fact. But the contention was held to be unsound, the court pointing out that the statute of the state which abrogated distinctions between accessories before the fact and principals, and authorized all persons concerned in the commission of a felony, whether they directly committed the act constituting the crime or aided and abetted in its commission, though not present, to be indicted, tried, and punished as principals, was valid, and that, when the law abolished distinctions between classes of offenders, an indictment charging one with the doing of the overt act substantially informed him of the nature and cause of the accusation against him. In Lowenstein v. People, 54 Barb. (N. Y.) 299, it was decided that a man who rents a house to be kept as a disorderly house, and which is so kept with his knowledge, especially where he derives a profit from that mode of using the property, may well be called the keeper of the house and be punished as such. And in People v. Erwin, 4 Denio (N. Y.) 129, it was held that the owner of a house who rents it to be used and kept as a house of prostitution is to be deemed a keeper of a bawdyhouse, and is liable to indictment and conviction as the keeper of such a house. The Court said:

"In misdemeanors there are no accessories. All who procure, counsel, aid, or abet the commission of the crime are principals."

The federal courts adopt the same rule, recognizing that the old distinctions which only pertained to felonies are generally abrogated, and that a charge against one formerly known as an accessory before the fact is good against him as principal. United States v. Snyder (C. C.) 14 Fed. 554; Toledo Ry. Co. v. Penn. Co., 54 Fed. 736, 19 L. R. A. 387; United States v. Stevens (D. C.) 44 Fed. 140.

Our conclusion is that where a statute has done away with former distinctions between principal and accessory before the fact, as it has in Alaska, a charge against one formerly known as an accessory is good against him as principal, and that he must answer to the proofs whether they disclose that he was present and did the overt act, or, not being present, aided and abetted the doing of it in a way to make himself liable as a principal.

It is next insisted that the court erred in overruling the challenges for cause to a number of jurors. Nearly every juror who sat was retained over the objection of plaintiff in error. Several of the jurors said they had prejudices against the keeping of bawdyhouses, that they knew the locality in the city of Nome described in the indictment and were prejudiced against it, but that they did not know the defendant, and would not convict him unless the prosecution established guilt beyond a reasonable doubt. It is evident that some of the jurors sat upon juries in the trials of other cases where defendants were charged with like offenses, and had formed opinions of more or less strength by reason of having heard the evidence in such other cases; yet their examinations failed to disclose such a knowl-

Digitized by Google

edge of the facts connected with this case, or such a frame of mind generally as to warrant us in holding that the trial court abused its discretion in overruling the challenges for cause. But among the jurors challenged were three whose examinations were as follows:

Phil. Ernst testified:

"I heard the statement of the case. I was one of the jurors in the Ludovic case; I have an opinion at this time as to the guilt or innocence of the defendant—I might say a fixed opinion, such as would require considerable evidence to remove. I believe I could be a fair and impartial juror. I don't know positively whether I could or not. I don't know the man, and have no prejudice against him. I have a prejudice against that business, but I have no knowledge of whether he is guilty or not; I might require less evidence to find a man, charged with setting up and keeping a bawdyhouse, guilty, but I think I would require the government to prove all the allegations of the indictment. I would require the government to prove him guilty by the preponderance of the evidence before I would render a verdict against him. I have an opinion as to the character of the house alleged from its description and locality; proof that the house was in the restricted district would be sufficient to my mind to establish its character. I don't know that a vacant house could have any character. There might be a laundry there. I don't know; but there would have to be evidence to show that to my mind. If the government simply introduced proof that the house is in the restricted district and no more proof were offered, I think I would conclude that it was a bawdyhouse from its locality.

"Mr. Bell: We challenge the juror for actual bias."

On cross-examination the juror said:

"I think that the government should prove beyond a reasonable doubt that the house which is alleged in the indictment was used as a house of ill fame or for the purposes of prostitution; but I would not infer that merely from the locality; but if there were no evidence offered as to the character of the house, and it was proved to be in that district, why, then, I would have an opinion as to its character from the district. I don't know this house; I would require the government to prove all the allegations of the indictment beyond a reasonable doubt before I would find the defendant guilty."

Chris Frantzen testified:

"I heard the statement of the case. I don't know the defendant. I have never heard the case discussed in any way. I have an opinion at this time as to the guilt and innocence of the defendant; it is a fixed opinion. I think I could lay it aside if the evidence showed he was not guilty. I was one of the jurors in the Ludovic case. I would try to lay aside my opinion and try the case according to the evidence. I am sure I could do it; but I have an opinion at the present time. I feel at the present time it would require evidence to remove that opinion; as it is, I would have to have some testimony before my mind would be evenly balanced as to the guilt or innocence of the defendant. I would not enter upon the trial of this case as a fair and impartial juror; that opinion which I now have would have some weight in considering the testimony and weighing the testimony that would be introduced, and my mind would be biased upon the testimony in finding a verdict at the present time. I do not feel that I could lay that opinion aside entirely and disregard it as though I never had any opinion whatever.

"Mr. Bell: We submit a challenge for actual as well as implied bias.

"Mr. Hoyt: We resist.

"Q. (by Mr. Landers) Upon what is that opinion based? A. Well, the house is inside the stockade. Q. You have an opinion just as to the character of the house then? A. Yes.

"(Continuing) I don't know anything about this house. I have a prejudice against the houses back in the stockade. I don't know whether this house is run as a house of prostitution or not. I don't know whether it is run by the de-

Digitized by Google

fendant. I have heard that he has several houses there, inside the stockade. I don't know whether he has or not. I don't know whether this particular house alleged in the indictment is one of them or not. I have an opinion in regard to this particular charge. I would enter into the trial of this case without any opinion whatever in regard to this particular charge of keeping a bawdyhouse within a certain house within that district."

James E. Cahill testified:

"I heard the statement of the case. I have heard the facts about this case. I know who the defendant is by sight. I have an opinion at the present time as to the guilt or innocence of the defendant. It is a decided opinion, which would require evidence to remove. It would require considerable evidence to remove the opinion that I now have, and I do not think I could lay it aside and have no weight in considering the testimony.

"Mr. Murane: We submit a challenge for actual bias.

"Mr. Hoyt: Challenge resisted.

"Q. (by Mr. Hoyt) Is your opinion based upon some knowledge which you have? A. No, just a general impression. Q. An impression, or a prejudice? A. No, an impression. Q. You have no knowledge as to the guilt or innocence under this charge? A. None whatever. * * *

"(Continuing) That is a strong opinion which I possess and which I will not be able to rid myself of.

"Mr. Hoyt. We do not resist the challenge.

"Q. (by the Court) Would you mix up with the evidence in the case, if you were sworn to try the case, would you mix up any knowledge that you might have with the evidence and base your verdict partly on that? A. Oh, no; I would not allow my prejudice to guide me to a verdict. Q. You do not know the defendant? Have you any prejudice against the United States? A. None whatever. Q. Do you think you could enter the jury box and render a fair, just, and impartial verdict? You would not convict anybody, would you, unless the evidence satisfied your mind beyond a reasonable doubt? A. I think, on the contrary, I would be more lenient after forming an opinion."

The statutes of Alaska bearing upon the qualifications of jurors are that a challenge for cause exists:

"Sec. 125. * * * Second. For the existence of a state of mind on the part of a juror in reference to the action or to either party which satisfies the trier, in the exercise of a sound discretion, that he can not try the issue impartially and without prejudice to the substantial rights of the party challenging, and which is known in this code as actual bias. * * *

"Sec. 127. Challenge for Actual Bias. That a challenge for actual bias may be taken for the cause mentioned in the second subdivision of section one hundred and twenty-five. But on the trial of such challenge, although it should appear that the juror challenged has formed or expressed an opinion upon the merits of the cause from what he may have heard or read, such opinion shall not of itself be sufficient to sustain the challenge, but the court must be satisfied, from all the circumstances, that the juror can not disregard such opinion and try the issue impartially."

It is not to be disputed that, unless manifest error has occurred in ruling upon the qualifications of jurors, the action of a trial court should not be disturbed. The position of the trial judge necessarily enables him to try the fitness of a juror to much better advantage than an appellate court can. Thiede v. Utah, 159 U. S. 510, 16 Sup. Ct. 62, 40 L. Ed. 237. It often happens that the very manner in which the answers are given by a juror greatly aids the trial court in judging fairly of the state of the juror's mind. It sometimes occurs that a juror, particularly if he is a man who is unfamiliar with court procedure, or one not well versed in the English language, or one who is uneducated, does not at once fully understand the significance of

Digitized by Google

the questions put to him by counsel as to any opinions or impressions he may have bearing upon the case. Sometimes it is only by repetition and perhaps after some explanation that the juror appreciates the purpose of the proceeding and slowly discloses the actual state of his mind. Such a juror may be perfectly honest, not trying to keep back anything; he may be anxious to be wholly truthful; yet upon the bare printed record there appear to be inconsistencies or evasions in his answers. We believe generally that in such instances the discretion of the trial court, presumably wisely exercised, should control, and appellate courts ought to refuse to interfere. But, on the other hand, in the interpretation of statutes concerning challenges to jurors for cause, it is of vital importance that the constitutional right to an impartial jury secured to a defendant by the sixth amendment be most carefully guarded, no matter how unimportant the case may be wherein it is seriously urged that this right has been denied. In Williams v. United States, 93 Fed. 396, 25 C. C. A. 369, decided by this court, there was no difference of opinion upon these general principles, but the judges disagreed upon whether or not the action of the trial court presented a case of manifest error, the majority holding it did. In Dolan v. United States, 116 Fed. 578,[1] this court again considered a ruling by a lower court upon challenges to jurors for cause, and again the judges disagreed, not upon the principle involved, but upon the extent of its application to the particular facts and evidence presented by the record. In neither of the cases, just cited, however, did it appear that the jurors challenged answered as did the two last whose examinations are given above. The examination of Juror Frantzen certainly showed that he went into the trial of the case with a fixed opinion that the defendant was guilty. He frankly stated that he had such an opinion, though he thought he could lay it aside if the evidence showed the defendant was not guilty. The juror would do his best to disregard the opinion, but he felt he could not lay it aside entirely. He had heard that this defendant had several houses inside the stockade where houses of prostitution were, but did not know whether he had or not. It is true that in concluding his testimony he said he would enter upon the trial without any opinion whatever in regard to this particular charge. But in the light of the specific prior statements made by the juror, his own judgment that he would not be a fair juror appears to us to have been the only proper conclusion that was deducible from what he said, and we think he ought to have been excused upon the challenge. Juror Cahill was even more unfit for service. He knew the facts and had an opinion, and felt that he could not lay his opinion aside. He said later that he had no knowledge of the guilt or innocence of defendant under the charge, but he had "an impression," a "strong opinion," which he would not be able to rid himself of. The district attorney did not resist the defendant's challenge to this juror, but the court carried the examination farther and elicited from the juror statements that he would not allow his prejudice to guide him to a verdict, that he had no prejudice against the United States (he was not asked if he had any against the defendant), and that he would be more lenient as a juror after

[1] 54 C. C. A. 34.

Digitized by Google

forming an opinion, and would not convict unless satisfied of guilt beyond a reasonable doubt.

We find it impossible to avoid the conclusion that a jury made in part of men whose minds are in such a condition is not impartial. It is possible, of course, that such a jury will be perfectly fair; but the standards by which courts must test impartiality are necessarily those derived from common experiences with practical human nature. So if men start out in a case with fixed opinions of guilt, and fear they cannot disregard them, their mental attitudes are well characterized by the language used by Juror Frantzen when he said he thought he could lay his opinion aside "if the evidence showed that the defendant was not guilty." The burden of proof as to guilt is too apt to be lost sight of before such a jury, and the defendant at the outset, and before a word of evidence is heard, finds himself forced into a trial with the jury strongly against him, and therefore without that full measure of protection which the presumption of innocence should afford him. The question is, therefore, of such a substantial nature that it has received our most earnest consideration in an endeavor to uphold the exercise of the discretionary power of the trial court without infringing upon the constitutional provision which surrounds the exercise of that power, and our conclusion is that there was an abuse of discretion in overruling defendant's challenges, and that because of this error the judgment must be reversed.

If, upon a new trial of the case, the prosecution again offers evidence to show that plaintiff in error was the owner of the property kept and used for purposes of prostitution, as a circumstance tending to rebut this evidence plaintiff in error should be allowed to introduce deeds tending to show legal title in another. Such testimony is proper, although it is not necessary for the government to establish that defendant was the owner of the house, nor is it necessary to show by positive testimony that he was the keeper. It may be found that he was the keeper by his acts and admissions, or by proof that he acted and held himself out as such keeper. If a man leases his house to a woman to be kept as a bawdyhouse for purposes of prostitution, and it is kept for such purposes, with his knowledge, he is guilty as keeper; and by the same principle the agent of an owner who rents a house knowing that it is to be used as a house of prostitution, and that it is so used, may be found guilty as a keeper. 14 Cyc. 489; Kessler v. State, 46 S. E. 408, 119 Ga. 301. We advise, too, that upon a new trial the court should adopt the suggestions as to what constitutes a reasonable doubt made by this court in its opinion remanding the case of Owens v. United States, 130 Fed. 279, 64 C. C. A. 525.

The judgment is reversed, and the cause remanded for a new trial.

Digitized by Google

(155 Fed. 48.)

HORNSTEIN v. UNITED STATES.

(Circuit Court of Appeals, Ninth Circuit. May 20, 1907.)

No. 1,403.

CRIMINAL LAW—JURISDICTION OF OFFENSE—OFFENSES AGAINST UNITED STATES AND MUNICIPALITY.

An ordinance prohibiting gambling and prescribing punishment for the same, enacted by a town of Alaska under authority conferred by Act April 28, 1904, c. 1778, 33 Stat. 529, does not deprive the district courts of jurisdiction of a prosecution for gambling within the limits of the town, instituted under the Penal Code of the district, which makes the same a criminal offense.

[Ed. Note.—For cases in point, see Cent. Dig. vol. 14, Criminal Law, § 176.]

In Error to the District Court of the United States for the Second Division of the District of Alaska.

Albert H. Elliot and George D. Schofield, for plaintiff in error. Henry M. Hoyt, U. S. Atty.

Before GILBERT and ROSS, Circuit Judges, and HUNT, District Judge.

HUNT, District Judge. Charles Hornstein, plaintiff in error, was convicted of the crime of gambling after trial upon information filed in the United States Commissioner's Court for the District of Alaska. To the information Hornstein filed a demurrer and plea in abatement, raising the point that the United States Commissioner had no jurisdiction over an offense committed within the incorporated limits of the town of Nome, District of Alaska, where the alleged crime was committed. The plea in abatement and demurrer were overruled, trial was then had before a jury, and a verdict of guilty was rendered. The plaintiff in error moved for a new trial, which motion was denied, and thereupon he was fined. From the judgment of conviction he sued out a writ of error to this court.

The statute of Alaska under which the information was filed reads as follows:

"That each and every person who shall deal, play, or carry on, open or cause to be opened, or who shall conduct, either as owner, proprietor or employee whether for hire or not, any game of faro, monte, roulette, rouge et noir, lansquenet, rondo, vingt-un, twenty-one, poker, draw poker, bragg, bluff, thaw, craps, or any banking or other device whether the game shall be played for money, checks, credit, or any other representative of value, shall be guilty of a misdemeanor."

Congress passed an act, approved April 28, 1904, 33 Stat. 529, c. 1778, entitled "An act to amend and codify the laws, relating to municipal corporations, in the District of Alaska." Under this act, the town of Nome, a municipal corporation, passed an ordinance on August 1, 1904, making it a misdemeanor to gamble. This ordinance was in effect at the time of the filing of the information against the plaintiff in error.

The principal contention of the plaintiff in error is that the act to amend and codify the laws relating to municipal corporations in the

Digitized by Google

District of Alaska, approved April 28, 1904, repealed the act of Congress of March 3, 1899, 30 Stat. 1253, c. 429, entitled "An act to define and punish crimes in the District of Alaska," in so far as the said act of March 3, 1899, related to the offense of gambling, where said offense is committed within the limits of incorporated towns, and where such incorporated towns have enacted ordinances defining the offense of gambling, and where such ordinances are in force, as in the case of the city of Nome. The legal question involved is the same as that presented and decided in the case of Mose Rosencranz v. United States, 155 Fed. 38,[1] and the conclusion there reached, that Congress under the act of April 28, 1904, c. 1778, 33 Stat. 529, did not intend to yield its authority over the subjects of gambling and other offenses enumerated, must control here. The argument that by the act of 1904 Congress intended to increase greatly the powers of town councils is sound until it is invoked to sustain the conclusion that the power conferred upon the municipality is inconsistent with the reservation of power by the United States. It then fails, for as we have shown in the Rosencranz Case, there is no repugnancy between the two acts, and in the absence of expressed or clearly implied terms that the jurisdiction should be exclusively in the municipalities we cannot find a surrender of the jurisdiction of the United States. Not finding such surrender, we cannot infer it merely upon the ground of a possible double prosecution. Cross v. North Carolina, 132 U. S. 131, 10 Sup. Ct. 47, 33 L. Ed. 287; Bishop on Statutory Crimes, § 24; Fox v. Ohio, 5 How. 410, 12 L. Ed. 213.

Plaintiff in error also contends that the court erred in refusing to instruct the jury in writing when requested by the defendant. Section 137 of the Penal Code of Alaska provides:

Subd. 5. "When the evidence is concluded, either party may request instructions to the jury on points of law, which shall be given or refused by the court; which instructions shall be reduced to writing if either party request it."

Subd. 7. "The court, after the argument is concluded, shall immediately, and before proceeding with other business, charge the jury; which charge, or any charge, given after the conclusion of the argument, shall be reduced to writing by the court, if either party request it before the argument of the trial is commenced; such charge or charges, or any other charge or instructions provided for in this section, when so written and given, shall in no case be orally qualified, modified, or in any manner explained to the jury by the court; and all written charges and instructions shall be taken by the jury in their retirement, and returned with their verdict into court, and shall remain on file with papers of the case."

The bill of exceptions does not show that the plaintiff in error requested the court to charge the jury in writing; but sets forth that the counsel for the plaintiff in error, just before the government rested its case, requested the court "in charging the jury to charge the jury according to defendant's written requests numbered 1 and 2." The purport of counsel's request and of his exception was therefore, not that the court should charge in the form of a written instruction, but that the substance of the written requests should be stated as the law to the jury, without regard to any particular form. Argument of the case was waived by defendant. The court then charged the jury orally. After the judge had delivered his charge, counsel for the defendant

[1] 83 C. C. A. 634.

Digitized by Google

for the first time stated that he took exceptions "to the oral instructions given by the court and the refusal of the court to charge the jury in writing." But, as said, the only request made before argument to the court having been that the jury should be charged "according to the defendant's written requests numbered 1 and 2," plaintiff cannot now urge that his rights were prejudiced by the omission of the court to deliver a written charge. Under no circumstances, however, could the plaintiff in error have been prejudiced by the failure of the court to charge the jury in writing, inasmuch as his two requests related entirely to the question of jurisdiction, which had been previously properly passed upon by the court in overruling his demurrer and plea in abatement.

We find no error in the record, and the judgment is affirmed.

(155 Fed. 50.)

BOTTS et al. v. UNITED STATES.

(Circuit Court of Appeals, Ninth Circuit. May 27, 1907.)

No. 1,406.

DISORDERLY HOUSE—PROSECUTION FOR KEEPING—PROOF OF CHARACTER OF HOUSE.

Although Alaska Pen. Code, § 128, expressly makes common fame competent evidence in support of an indictment for keeping a bawdyhouse for purposes of prostitution, such evidence alone is not sufficient proof to warrant a conviction, but there must be some evidence that the house was in fact kept and used for such purposes. Such evidence need not, however, be direct, but may be circumstantial.

[Ed. Note.—For cases in point, see Cent. Dig. vol. 17, Disorderly House, §§ 26–29.]

In Error to the District Court of the United States for the Second Division of the District of Alaska.

The plaintiffs in error, Lloyd Botts and James Haughey, were indicted by the grand jury of the District of Alaska for the crime of keeping a bawdyhouse for purposes of prostitution therein. The plaintiffs in error interposed pleas in abatement, alleging facts upon which the contention was made that the municipal court in and for the city of Nome, Alaska, had exclusive jurisdiction of the offense charged in the indictment, and that the District Court of the District of Alaska, Second Division, had no jurisdiction of said offense. Plaintiffs in error also filed demurrers to the indictment, raising the same questions of jurisdiction. The court overruled the pleas in abatement and the demurrers. Trial was had, and a verdict of guilty rendered. The plaintiffs in error were sentenced to imprisonment for the period of one year. This writ of error is prosecuted to obtain a review of the proceedings and rulings of the lower court, and to set aside the judgment of conviction, and to have the indictment dismissed and a new trial ordered.

W. H. Bard, James W. Bell, C. D. Murane, Hobbes & Bell, and James E. Fenton, for plaintiffs in error.

Henry M. Hoyt, U. S. Atty.

Before GILBERT and ROSS, Circuit Judges, and HUNT, District Judge.

HUNT, District Judge, after making the foregoing statement of the case, delivered the opinion of the court.

Digitized by Google

The same question of jurisdiction is presented by this writ of error that has been decided in the case of Rosencranz v. United States, 155 Fed. 38, and for the reasons announced in the opinion filed therein we affirm the action of the lower court overruling the pleas in abatement and the demurrers, and pass to the consideration of other points.

The record shows that the prosecution was conducted upon the theory that if the government proved that the reputation of the house situated upon the lot described in the indictment was that it was a bawdyhouse, and that if defendants as owners knew of such reputation, and with such knowledge received rentals from the occupant, they themselves became keepers of a bawdyhouse for purposes of prostitution, and were liable to punishment as such keepers. Upon this theory the court instructed the jury:

"That in all prosecutions for the offense of keeping a bawdyhouse, common fame or reputation is competent evidence in support of the indictment as to the character of the house. Therefore, if the house has the reputation of being a bawdyhouse or house of ill fame, beyond a reasonable doubt, that is sufficient to support a finding that it is such, if there is no evidence offered to the contrary."

The court refused to give in substance, or at all, an instruction requested by defendant that—

"under the statute common fame is made competent evidence of the character of the house in question, but reputation or fame alone is not sufficient evidence to warrant a conviction for keeping a bawdy house; there must be some other evidence showing that the house is actually used as a bawdyhouse for purposes of prostitution."

The question for decision, therefore, is whether evidence of the general reputation of a house is sufficient proof of its being bawdy and used for prostitution, or whether besides the ill repute of the house, some other evidence is necessary in order to justify the inference that it is bawdy. It is laid down that under the common law, evidence of the general reputation of the house would be inadmissible upon the issue of whether the house is a bawdy one. 14 Cyc. 503; State v. Plant, 32 Atl. 237, 67 Vt. 454, 48 Am. St. Rep. 821. But by statute, section 128, Alaska Code, "common fame" is expressly made competent evidence in support of an indictment such as we find in the present case. So that there is no room for contention that such evidence was inadmissible altogether, the point being, was it alone sufficient proof to sustain a conclusion that the house was in fact a bawdy one for purposes of prostitution? We must answer the question in the negative.

Undoubtedly there are some cases which hold that, where the evidence shows that a house is by general repute a bawdyhouse, the jury may find from such evidence alone that as a fact it is a bawdyhouse and used for immoral purposes. But where the offense charged is keeping a house of ill fame for purposes of prostitution, we believe there should be some evidence of the purpose or use for which the house was kept, besides that of common fame. If reputation alone is enough, then one may be tried and convicted of keeping a house commonly said to be a bawdyhouse for purposes of prostitution re-

Digitized by Google

gardless of the question whether or not the house involved in the inquiry is in fact bawdy and used for such immoral purposes. On principle such a rule would be dangerous, and we must decline to approve it. There should be some additional evidence of the immoral purposes for which the house is kept; and, while it may not seem always easy to obtain testimony of such purposes, as a practical affair it ought not to be difficult, provided the reputation is based upon facts. The very same circumstances that have given a place its ill repute would ordinarily be ample additional evidence of the uses made of the house and the purposes for which it is kept. If men are seen going at unusual hours into a house where only women live; if obscene language and profanity are heard in the house; if drinking and boisterous conduct occur therein; if women clad in an unseemly way are about the premises; and if the women who live in the house are themselves reputed to be prostitutes—these are all circumstances which, when considered with the general reputation of the place, justify the conclusion that such a house is kept for purposes of prostitution. Drake v. State, 17 N. W. 117, 14 Neb. 535; State v. Steen, 101 N. W. 96, 125 Iowa, 307; State v. Hendricks, 15 Mont. 194, 39 Pac. 93, 48 Am. St. Rep. 666; State v. Boardman, 64 Me. 523; Toney v. State, 60 Ala. 97; 14 Cyc. 510; Greenleaf on Evidence, § 186. These views dispose of the case, and necessarily lead to a reversal because of substantial error in the charge of the court.

The judgment is reversed, and the cause remanded for a new trial.

(155 Fed. 88.)

GWYN v. CINCINNATI, N. O. & T. P. R. CO.

(Circuit Court of Appeals, Sixth Circuit. June 14, 1907.)

No. 1,638.

CARRIERS—PUTTING PASSENGER OFF AT DANGEROUS PLACE—PROXIMATE CAUSE OF DEATH.

Plaintiff's intestate was riding on defendant's railroad on a through ticket, which entitled him to transportation to a junction with the next connecting road. The train on which he took passage did not stop at the junction, but stopped at a station four miles north, to which the train of the connecting road also ran over defendant's track to make connection with it. Deceased was advised of such fact, and told to get off at such station, which he did, but for some unexplained reason got back on the same train and started southward. He was soon discovered by the conductor, who put him off a half mile south of the station and told him that if he would hasten back he could still catch his connecting train, which would soon follow. The place at which he was put off was between two tunnels, and he walked back through the north one, and while talking with a man whom he met his train left the station, which was in sight and only a short distance away. He then turned southward again, walked through the first tunnel, and entered the second, which was 1,600 feet

Digitized by Google

long, curving, very dark and narrow, and while in such tunnel was struck by a train and so injured that he soon died. There was no material evidence to show how he came to be struck. *Held* that, conceding that deceased was put off at a dangerous place between the two tunnels, he had passed such danger and reached a place of safety, and the proximate cause of his death was, not such negligence of the conductor, but his own voluntary act in turning back, for which defendant could not be held liable.

[Ed. Note.—For cases in point, see Cent. Dig. vol. 9, Carriers, § 1245.]

In Error to the Circuit Court of the United States for the Eastern District of Tennessee.

A. G. Foster, the plaintiff's intestate, was run over and killed by a railway train operated by the servants of the defendant in error. The accident took place in a long, narrow, and dark tunnel, being tunnel No. 26, between Oakdale and Harriman Junction, Tenn. The deceased bought a ticket at Charleston, W. Va., from the Chesapeake & Ohio Railway Company, for Knoxville, Tenn.; one coupon calling for a passage over the Chesapeake & Ohio Railway Company to Lexington, Ky., another for a passage over the lines of the defendant railway company from Lexington to Harriman Junction, Tenn., and a third for a passage over the Southern Railway from Harriman to Knoxville. Harriman was the junction point of the railroads; but by arrangement the latter ran its trains over the rails of the first-named company to Oakdale, four miles north of Harriman, for the purpose of there exchanging passengers. One of defendant's daily passenger trains did not stop at Harriman at all, while the other did. The deceased, by mistake, took that train at Lexington which did not stop at Harriman. He was advised of this, and told to get off at Oakdale, where he could take a Southern train which would take him to Knoxville upon the coupon which called for that city. On reaching Oakdale deceased got off according to instructions given him; but instead of waiting for and taking the Southern train, which he had been told would follow defendant's train out of Oakdale, he for some unexplained reason got back upon defendant's train. He was discovered very shortly after leaving Oakdale, and told that he was on the wrong train, and that he could, by hurrying, get back to the platform and catch the Knoxville train before it should pull out. The train was at once stopped, and deceased put off at a point just about one-half mile south of the Oakdale platform, and at a point on defendant's line between two tunnels, one known as "Tunnel No. 25" and the other as "No. 26." Tunnel No. 25 is a straight tunnel, about 200 feet in length, and open and light enough to see through. Its southern portal was some 200 feet north of the point where deceased left the train, and its northern portal is 1,200 to 1,500 feet from the Oakdale station. Tunnel No. 26 began about 1,000 feet south of the point of ejection, and was some 1,600 feet long, curving, and very dark and narrow. Deceased started to walk back to Oakdale. He reached and safely passed through tunnel No. 25, and reached a point some 200 or 300 feet north of its northern portal, and was in plain sight of the Oakdale station, where the train he wanted was standing. There he met a Mr. Case, who lived at Oakdale, and stopped and had some conversation with him. While talking to Case the train he wanted to catch was observed to be moving, and Case told him he had missed his train. He then made some inquiries about trains out of Oakdale and Harriman, and hotels at each point. He was also told that it was about four miles to Harriman, and that Harriman was in just the opposite direction to Oakdale. Deceased then turned back and started down the track toward Harriman. While going through tunnel No. 26 he was struck and sustained injuries from which he soon died. There was no evidence, of material character, to show how he came to be struck. The tunnel is so dark and low and curving that smoke accumulates ahead of an engine going south in such a way as to prevent a headlight penetrating the darkness more than a few feet. There was evidence of compliance with the provisions of the Tennessee statute, in respect to the precautions to be observed in running trains, by the only two trains which could possibly have collided with him. Foster alighted from defendant's

Digitized by Google

train about 4:15 o'clock p. m. and was found in tunnel No. 26 between 4:30 o'clock and 5 the same afternoon; the day being December 7th. At the close of all of the evidence, the jury was instructed to find for the defendant.

Jerome Templeton, for plaintiff in error.

T. A. Wright and Edward Colston, for defendant in error.

Before LURTON, SEVERENS, and RICHARDS, Circuit Judges.

After making the foregoing statement of the facts, the opinion of the court was delivered by LURTON, Circuit Judge.

It cannot be said that there was not evidence from which the jury might have found that the deceased was put off at a dangerous place, from which he could not reach a place of safety without some risk. Neither was the evidence all one way as to whether he got off voluntarily or not at that place. In view of this state of the evidence, the trial judge announced that upon the matter of negligence there was a question for the jury, and based his instructions to find for the defendant in error wholly upon the ground that any negligence in putting him off when and where it did was not, as matter of law, the proximate cause of his death. In this conclusion we concur. The deceased wished to connect with a train which would carry him to Knoxville. There is no disputing the fact that he knew he had to make his connection at Oakdale, and that the train he had taken would not stop at Harriman Junction. He got off at Oakdale to do this thing. For some unexplained reason he got back upon the train he alighted from. Possibly this was due to some confusion of mind, for he was awakened from sleep to get off there. However, the fact is that after being fully advised he got off at Oakdale and then got back on again. The conductor discovered him very soon after leaving Oakdale, and told him plainly he had time, if he would hurry, to get back to the platform and catch the train, which would in ten minutes follow his own train.

Now, assuming that he did not of choice alight at this place because it gave him a good chance to get back and catch the right train, but that he left only because the conductor put him off as a passenger upon a wrong train, it is not deniable that he was put off with the direction and in the reasonable expectation that he would go back to Oakdale, and that, if he did not delay, he would catch his train and retrieve his mistake. Contrary to his own expressed purpose and to the explicit direction of the railway conductor as to the direction he should take to extricate himself from the place, he dallied along until the train he was intent on catching had pulled out. If he had then gone to Oakdale, he would have there found that there was no passenger train, from either Oakdale or Harriman Junction, by which he might go to Knoxville, until morning. But if he preferred to stay at Harriman Junction, though it was a place without accommodations, in order to take a chance of getting into Knoxville on a freight train, he would have found at Oakdale that an accommodation train would leave for Harriman within a few minutes. But, losing his chance to catch the train he should have taken, he turned his back upon Oakdale, its hotel and station being in full sight, and set off to walk down the track to Harriman Junction, four miles away. This he doubtless did

Digitized by Google

upon some notion that he might have there a chance for a train to Knoxville which he would not have at Oakdale. Possibly he did this upon advice or information from Case. But Case was a stranger to the defendant in error, though he had once been in their employment. When he made this change in his plans, deceased had then extricated himself from any particular dangers incident to the place of his ejection from the train, and might have made his way safely to Oakdale in ample time to have taken the local train for Harriman, if, for any reason, he should prefer to go there.

The only legal liability of the defendant company in this action is for damages resulting from being put off of its train at a dangerous place. But when he changed his purpose of going to Oakdale he had extricated himself from that dangerous place and was that moment as safe as if he had there been put off. Being in plain sight of the Oakdale station and the principal Oakdale hotel, and very near to paths alongside of the tracks which would have led him safely to the railway station, he turned his back upon Oakdale, returned to the alleged dangerous place from which he had made his way, and then, in the face of the ominous appearance and warning notices at the portal of tunnel No. 26, undertook to go through that gloomy passage under the mountain. This voluntary return to the dangerous place from which he had safely escaped, and his voluntary effort to go through tunnel No. 26, whether superinduced by information from Case or not, is of no legal importance, as Case was a stranger, was an act of folly which could not have been reasonably anticipated, and was itself an intervening and proximate cause of his death which ensued. A wrongdoer is responsible for the results which should be anticipated as the natural consequences of the wrong, but not for those which ensue from some line of conduct by the injured person, or unforeseen consequences which might not be reasonably anticipated. The relation of the defendant's original negligence to the collision which occurred in tunnel No. 26 was too remote to be regarded as the proximate cause of his death. Milwaukee R. R. Co. v. Kellogg, 94 U. S. 469, 475, 24 L. Ed. 256; Scheffer v. Railroad Co., 105 U. S. 249, 26 L. Ed. 1070; Butts v. Cleveland, C., C. & St. L. R. R. Co., 110 Fed. 329, 330, 49 C. C. A. 69; Jarnagin v. Travelers' Protective Ass'n, 133 Fed. 892, 895, 66 C. C. A. 622, 68 L. R. A. 499; Jackson v. Railroad Co., 13 Lea (Tenn.) 491, 49 Am. Rep. 663; Railroad v. Fleming, 14 Lea (Tenn.) 128; Hamilton v. Railroad Co., 183 Pa. 638, 38 Atl. 1085; Gaukler v. Detroit Ry. Co., 130 Mich. 666, 90 N. W. 660.

The case of Washington, etc., Street Ry. Co. v. Hickey, 166 U. S. 521, 17 Sup. Ct. 661, 41 L. Ed. 1101, has been cited and pressed upon us as if it established some new rule in respect to what constitutes a proximate cause of negligence. This is a misapprehension of the case. In that case counsel sought to separate the cause of the accident into two distinct causes, one of which they claimed was remote and the other proximate. The court, upon the peculiar facts of the case, said:

"The two so-called negligent acts were in fact united in producing the result, and they made one cause of concurring negligence on the part of both companies. They were in point of time substantially simultaneous acts and parts of one whole transaction, and it would be improper to attempt a separation in the manner asked for by the counsel for the horse car company."

Digitized by Google

Counsel have suggested that there might be a liability for the action of the signal man at the tower, between the two tunnels, in permitting north-bound trains to enter tunnel No. 26 while the deceased was in that tunnel. The pleadings raise no such question, nor does the evidence show the signal man to have had any knowledge of deceased's presence in the tunnel when he signaled trains bound north that the track was clear.

Judgment affirmed.

(155 Fed. 92.)

NATIONAL ASS'N OF RY. POSTAL CLERKS v. SCOTT.

(Circuit Court of Appeals, Second Circuit. May 30, 1907.)

No. 270.

1. INSURANCE—ACTION ON ACCIDENT POLICY—BURDEN AND MEASURE OF PROOF.
   To warrant a recovery on an accident policy insuring against death only when it results alone from an accidental injury, the plaintiff must establish two fundamental propositions: First, that there was an accidental injury; and, second, that it alone caused the death.
   [Ed. Note.—For cases in point, see Cent. Dig. vol. 28, Insurance, § 1721.]

2. SAME—PROOF OF ACCIDENTAL INJURY—SUFFICIENCY OF EVIDENCE.
   In an action to recover for the death of an insured under an accident policy or certificate which provided that the insurer should be liable for death only in case it resulted alone from bodily injuries received through external, violent, and accidental means, the plaintiff was not entitled to recover where the sole evidence relating to the receipt of any accidental injury by the deceased was testimony showing that some three months prior to his death there was a discolored spot on one of his shins, several inches in extent, which might have been caused by a bruise or an abrasion.
   [Ed. Note.—For cases in point, see Cent. Dig. vol. 28, Insurance, § 1721.]

3. TRIAL—DIRECTION OF VERDICT—INSUFFICIENCY OF EVIDENCE.
   Under the rule of the federal courts, a court should direct a verdict where the evidence produced by the party on whom rests the burden of proof is insufficient to sustain a verdict in his favor.
   [Ed. Note.—For cases in point, see Cent. Dig. vol. 46, Trial, §§ 376-380.]

In Error to the Circuit Court of the United States for the Western District of New York.

On writ of error to the Circuit Court for the Western District of New York to review a judgment entered upon the verdict of a jury in favor of the plaintiff for $3,420.40, upon a certificate of insurance for $3,000, issued by the defendant to Winfield L. Scott for the benefit of the plaintiff, who was his wife.

Edward P. White, for plaintiff in error.

Carey D. Davie, for defendant in error.

Before LACOMBE, TOWNSEND, and COXE, Circuit Judges.

COXE, Circuit Judge. The certificate issued to Scott provides that if, during its continuance, he shall receive bodily injuries "through

Digitized by Google

external, violent and accidental means" and "if death shall result from such injuries alone within one hundred and twenty days the association will pay not to exceed $3,000 * * * to Mary A. Scott, his wife."

The complaint alleges that on or about November 1, 1902, at the village of Cuba "and while the said Winfield L. Scott was actually engaged in the performance of his duties as a railway postal clerk he received severe injuries by accidental, external and violent means, which injuries received as aforesaid caused the death of said Winfield L. Scott on the 25th day of January, 1903; that such injury, received as aforesaid, was entirely accidental, and that the same was the cause of the death of said Winfield L. Scott, and that such death occurred within the period of one hundred and twenty days after the occurrence of such injury."

This allegation is denied by the answer, the defendant alleging that death resulted from natural causes.

At the close of the testimony the court was asked to direct a verdict for the defendant on the ground that the plaintiff had failed to prove a case of death from accidental causes. The court was at first disposed to grant the motion, saying:

> "My impression is that there is no evidence here of accidental death. I think I must ask you to convince me that this death was caused by one of these reasons specified in the policy and the constitution of the order."

Subsequently, however, he became convinced that there was "some evidence tending to show that prior to November 1, 1902, the decedent was a strong healthy man not afflicted with any of these diseases with which he was subsequently afflicted," and concluded to submit the case to the jury.

The principal question litigated was this: Did the assured receive on November 1, 1902, an accidental injury, and, if so, did death result from this injury alone?

In approaching the consideration of this question it is well to bear in mind that the law places upon the plaintiff the burden of establishing two fundamental propositions: First, that there was an accidental injury; and, second, that it alone caused the death of Scott.

The evidence is overwhelmingly to the effect that prior to November, 1902, Scott was far from well; he had been reduced in salary and placed on the short run between Salamanca and Hornellsville, instead of the long one between Salamanca and Jersey City. During the seven years prior to his death he was frequently off duty on account of sickness and wrote to the chief clerk explaining the cause of his absence and the nature of his illness, as shown by certificates of physicians inclosed. Thus, from January 1 to March 1, 1900, Dr. Lattin certified that he was suffering from "albuminuria," which incapacitated him from attending to duty; from April 30 to May 31, 1902, Dr. Wilcox certified that he was unable to attend to his duties because of an operation for "double hernia"; from June 27 to July 5, 1902, he was treated by Dr. Miller for "congestion of the liver and palpitation of the heart," and from November 4th to November 6th he was suffering from "heart trouble," as certified to by Dr. Bourne. Dr. Bozovsky, of Dunkirk, attended him from December 17, 1902, to December 30, 1902,

Digitized by Google

and certified that his ailment was "torpid liver and nephritis," and the same physician certifies that the chief cause of death was "nephritis," the contributing cause being "valvular heart trouble."

Within six months prior to November 1st, therefore, Scott, who was 60 years of age, had been treated for double hernia, congestion of the liver and palpitation of the heart. In view of all this it is not surprising that July 5, 1902, he wrote his chief: "Dr. Miller says I was pretty near a goner on June 27th." After November 1st there are certificates from three physicians as to Scott's maladies, but no one of them mentions an accident or the discovery of a bruise upon one of his shin bones. On November 6, 1902, Scott wrote Chief Wade: "I was taken seriously ill Tuesday night (November 4). My heart rather failed me." On November 11th and 13th and on December 1st he also wrote Wade, but in none of these was there any allusion to an accident or a bruise.

Under the certificate of insurance Scott was entitled to receive "a sum not exceeding $15.00 per week against loss of time." Although he was off duty for 12 weeks after November 1, 1902, he made no application for an allowance and did not mention any accident, notwithstanding the fact that he wrote to the defendant's collector paying an assessment about November 20th.

An autopsy was made February 4, 1903, and the physician who made it testified as follows:

"I examined the thorax and found both lungs in a state of congestion and engorgement, indicating pneumonia in life. The left pleura was adherent, showing that an old pleurisy had existed. The heart was hypertrophied; the left ventricle being greatly thickened. The middle valve of the aorta had a calcareous deposit at its base which seriously interfered with the closing of the valve, making a permanent heart leak. The aorta just above the valve had a patch of calcareous degeneration in it about half an inch long, and there were several other smaller patches of calcareous degeneration near it in the vessels beyond. The liver was simply engorged with bile, there being an impacted stone in the cystic duct pressing on the common duct and a suppurating gall bladder. Both kidneys showed degenerative processes, the capsules peeling readily, and an abscess was found in the upper part of the left kidney; constricted and encysted appendix. Other abdominal organs normal. From what I saw of the lungs and their condition, pneumonia had been present at the time of death. Pneumonia of both lungs of the degree observed, together with the weak and leaking heart, was practically of a fatal nature. In cases of serious pneumonia, a weak heart, or a heart such as that of the deceased, is a serious additional factor."

To find that Scott was a strong healthy man on the first day of November, 1902, involves the conclusion that he was a malingerer and a falsifier and that the physicians who certified to his disabilities were either charlatans or incompetents. On the contrary, the record shows that Scott was a hard working, conscientious, honest man and that the physicians were men of learning and high standing in their profession.

But, let it be assumed that there was sufficient dispute upon the testimony to warrant the submission of the question as to his previous health to the jury, how then stands the case? The entire fabric of the defendant's liability is built upon the theory that Scott received an injury on November 1, 1902, at Cuba, which caused his death. This

Digitized by Google

is the keystone of the plaintiff's case; if it be removed the entire structure falls to the ground. We have searched the record in vain for evidence of such an injury or, indeed, of any injury, on that day. The plaintiff testified that when her husband left home on the last day of October he was in good health, with no wound on his leg and that when he returned at 4 o'clock on November 1st he appeared sick, feeble and weary. There was a bruise on his left shin five or six inches long and two or three inches wide; it looked red. Dr. McIntosh saw this bruise in November but did not examine it until December. He thus describes it:

"It was very much discolored. It looked as though the skin had been rubbed or jammed and quite badly discolored. The discoloration was up and down the leg. It might have been five or six inches in length and four or five wide, about that. It did not look as though there had been any tearing through the skin, to get down through the whole of the skin."

When, where or how this bruise was received does not appear. There is no proof that it was received at Cuba on November 1st. In fact the testimony of the trainmen is to the effect that Scott performed his duties as usual that day. He said nothing about an accident and they heard of none. The postal clerk at Hornellsville, in whose office Scott was required to register, saw him November 1st. He also saw him on his next trip, November 3d. He said he was going to Cattaraugus to vote. On the night of election day he went to Salamanca intending to take his usual trip in the morning. That night he was found at his boarding house, in Salamanca, by Dr. Bourne in a serious condition from which he was aroused by hypodermics of strychnine and digitalis. On the 6th of November he went to his home where he remained until December 18th, when he was taken to the home of his son, at Dunkirk, where he remained until his death.

In the hypothetical questions addressed to the medical experts the plaintiff's counsel assumes that Scott received an external injury on November 1st severe enough to produce shock which caused all the other ailments which resulted in his death. Indeed, the trial proceeded from beginning to end upon this theory, which would be plausible enough were not the major premise—injury through external, violent and accidental means—wholly lacking.

It is true that he had a bruise on his left shin, but everything else regarding it is left to conjecture. Instead of proving an injury received at Cuba on November 1st severe enough to produce shock, the presence of shock caused by the injury and nephritis and heart disease resulting from shock, the plaintiff's logic is in the inverse order. The argument proceeds on the following hypotheses—that death on January 25, 1903, was caused by diseases which may have been produced by shock, that shock may be caused by a severe external injury, that a bruise on the skin indicates an external injury, therefore Scott must have received such an injury on November 1st at Cuba. It will be observed that there is a fatal hiatus between the fact that death occurred and the conclusion that it was caused alone by an external injury.

We are of the opinion, therefore, that the court should have directed a verdict for the defendant on the ground that the plaintiff had not

Digitized by Google

sustained the onus of proving that Scott's death was caused alone by external violent and accidental means.

As there was no direct proof of this fundamental fact and as plaintiff's contention regarding it rested only upon presumption and guesswork, it was the duty of the court to direct a verdict for the defendant.

In Com'rs v. Clark, 94 U. S. 278, at page 284, 24 L. Ed. 59, the court says:

"Decided cases may be found where it is held that, if there is a scintilla of evidence in support of a case, the judge is bound to leave it to the jury; but the modern decisions have established a more reasonable rule; to wit, that, before the evidence is left to the jury, there is or may be in every case a preliminary question for the judge, not whether there is literally no evidence, but whether there is any upon which a jury can properly proceed to find a verdict for the party producing it, upon whom the burden of proof is imposed." North Penn. R. Co. v. Com. Nat. Bank, 123 U. S. 727, 733, 8 Sup. Ct. 266, 31 L. Ed. 287; Anderson Co. Com'rs v. Beal, 113 U. S. 227, 241, 5 Sup. Ct. 433, 28 L. Ed. 966; Pleasants v. Fant, 22 Wall. 116, 22 L. Ed. 780; Treat Mfg. Co. v. Standard Steel & I. Co., 157 U. S. 675, 15 Sup. Ct. 718, 39 L. Ed. 853; Cudahy Packing Co. v. Marcan, 106 Fed. 645, 45 C. C. A. 515, 54 L. R. A. 258; Penn. R. Co. v. Martin, 111 Fed. 586, 49 C. C. A. 474, 55 L. R. A. 361.

Even if it be assumed that there was an injury as alleged in the complaint it is doubtful if there was sufficient evidence to go to the jury upon the question whether or not the injury alone caused the death. The law on this subject is well stated in Masonic Ass'n v. Shyock, 73 Fed. 774, 20 C. C. A. 3, as follows:

"The burden of proof was upon the defendant in error to establish the facts that William B. Shyock sustained an accident, and that that accident was the sole cause of his death, independently of all other causes. If Shyock suffered such an accident, and his death was caused by that alone, the association agreed by this certificate to pay the promised indemnity. But if he was affected with a disease or bodily infirmity which caused his death, the association was not liable under this certificate, whether he also suffered an accident or not. If he sustained an accident, but at the time it occurred he was suffering from pre-existing disease or bodily infirmity, and if the accident would not have caused his death if he had not been affected with disease or infirmity, but died because the accident aggravated the effects of the disease, or the disease aggravated the effects of the accident, then the defendant is not liable, because the express contract was that the association should not be liable for the amount of the insurance, for in such a case death would not be the result of accident alone, but would be caused partly by the disease and partly by the accident."

The death being produced by Bright's disease assisted by valvular heart trouble it is difficult to perceive, in view of the prior difficulty with the heart, how it can be said that the injury alone caused the death. However, we prefer to rest the decision upon the entire absence of any competent proof of the happening of the alleged accident.

The judgment is reversed and a new trial ordered.

Digitized by Google

(155 Fed. 385.)

DERHAM v. DONOHUE.

(Circuit Court of Appeals, Eighth Circuit. July 10, 1907.)

No. 2,447.

1. PLEADING—AMENDMENT PERMISSIBLE WHERE VARIANCE IMMATERIAL.

Where the variance between the pleading and the facts which the pleader seeks to prove is so slight that it is obvious that the opposing party could not have been misled by it in the preparation of his case for trial, it is the duty of the court to disregard it or to permit an amendment to conform the pleading to the proof offered.

[Ed. Note.—For cases in point, see Cent. Dig. vol. 39, Pleading, § 1338.]

2. BILLS AND NOTES—NOTICE OF PROTEST—SUFFICIENCY.

A notice of protest is sufficient which by express terms or by necessary implication informs the indorser of the identity of the paper, of due demand, of its protest, and of its dishonor.

Mistakes and omissions in it which obviously could not have misled or prejudiced the indorser are not fatal.

[Ed. Note.—For cases in point, see Cent. Dig. vol. 7, Bills and Notes, §§ 1129-1136.]

3. SAME—FACTS—CONCLUSION.

A certificate of deposit dated January 25, 1904, due January 25, 1905, was duly presented for payment. Payment was demanded and refused on January 25, 1905. Thereupon a notice of the presentment, demand, and dishonor was sent to, and received by, the indorser, which was dated January 25, 1904, when it should have been dated January 25, 1905, which stated that the demand and dishonor were on the day of the date of the notice, that the certificate was dated January 25, 1905, when it was dated January 25, 1904, and it omitted to recite this clause which was in the certificate, "No interest after six months." *Held*, the notice sufficiently identified the certificate and notified the indorser of due presentment, demand, and dishonor, so that it is obvious that he could not have been misled or prejudiced by the mistakes in it.

[Ed. Note.—For cases in point, see Cent. Dig. vol. 7, Bills and Notes, §§ 1129-1136.]

(Syllabus by the Court.)

In Error to the Circuit Court of the United States for the District of Minnesota.

D. W. Lawler and D. F. Lyons, for plaintiff in error.

Thomas H. Quinn, for defendant in error.

Before SANBORN and HOOK, Circuit Judges, and PHILIPS, District Judge.

SANBORN, Circuit Judge. M. F. Donohue recovered a judgment against John Derham, the indorser of a certificate of deposit issued by the First National Bank of Faribault, and the defendant sued out this writ of error to reverse it.

The first alleged error specified is that the court permitted the plaintiff to amend his amended complaint at the trial when the certificate and indorsement were offered in evidence by inserting in the copy of the certificate set forth in the pleading the words, "With interest at 3 per cent. per annum, no interest after 6 months," which had been omitted from the complaint, and received the certificate and indorsement in evidence. But the statutes of Minnesota provide that:

Digitized by Google

"No variance between the allegation in the pleading and the proof is material, unless it has actually misled the adverse party to his prejudice in maintaining his action or defense upon the merits. Whenever it is alleged that a party has been so misled, that fact shall be proved to the satisfaction of the court, and it shall be shown in what respect he has been misled; and thereupon the court may order the pleading to be amended upon such terms as may be just." General Statutes of Minnesota 1894, § 5262.

The Supreme Court of Minnesota has declared that:

"When the disagreement between the facts alleged and the facts proved or sought to be proved is so slight that it is perfectly obvious that the adverse party could not have been misled in his preparation for trial, the variance is deemed immaterial, and the court will either disregard it altogether or order an immediate amendment without costs." Wilcox Lumber Co. v. Ritteman, 88 Minn. 18, 92 N. W. 472.

The case in hand falls under this rule. The certificate of deposit was set forth correctly in the original complaint and its execution was admitted by the answer; but the words "with interest at 3 per cent. per annum, no interest after 6 months," were omitted from the amended complaint. It is obvious that the defendant could not have been misled by this omission in his preparation for the trial, and it was the duty of the court below to permit the amendment and to receive the certificate and indorsement in evidence under the United States statute of jeofails. Rev. St. § 954 [U. S. Comp. St. 1901, p. 696]; Gen. St. Minn. 1894, §§ 5262, 5266.

The second error specified is that the court rejected evidence that Stateler agreed with Derham to take the certificate of deposit as an absolute payment of its face value for a part of the purchase price of his farm. Stateler sold his farm to Derham about December 16, 1904. Donohue had a mortgage on the farm for $4,599. Derham signed this indorsement, "Pay to the order of M. F. Donohue," upon the certificate, and delivered it to Donohue, and the latter released his mortgage and paid over to Stateler $401, the difference between the principal of the debt evidenced by the certificate and the amount due on his mortgage. The agreement between Donohue and Stateler was made at the time of the sale of the farm before the certificate was indorsed and delivered to Donohue and was not communicated to the latter. Counsel argue that this agreement constituted a defense to this action under section 5157 of Statutes of Minnesota 1894, which reads:

"In the case of an assignment of a thing in action, the action by the assignee is without prejudice to any set-off or other defense existing at the time of, or before notice of, the assignment; but this section does not apply to a negotiable promissory note or bill of exchange, transferred in good faith and upon good consideration, before due."

They cite in support of their contention La Due v. First National Bank, 31 Minn. 33, 16 N. W. 426. In that case the payee of a draft indorsed it to one Edison, against whom the drawer, the defendant bank, had an offset. After the draft became due Edison indorsed it and it passed by subsequent indorsements to the plaintiff. The court held that the indorsers subsequent to Edison took it subject to the same offset to which it was subject in his hands. But the action in that case was

Digitized by Google

upon the draft, and that draft had passed by indorsement through Edison to assignees of the plaintiff. In the case in hand the action is not upon the certificate of deposit which Derham once owned, but upon Derham's indorsement of it. That indorsement was made directly to the plaintiff Donohue. Whatever the relations of Stateler and Derham may have been, there never was any contract of indorsement of this certificate between Derham and Stateler, and as Stateler was never a party to, or the owner of, such a contract, he was never the owner or assignor of the thing in action here in hand, the indorsement to Donohue, which is the subject of this action, and the statute invoked has no application to this case. The evidence of the agreement between Stateler and Derham was immaterial and inadmissible.

About the 16th day of December, 1904, in the negotiations for the indorsement of the certificate and the satisfaction of the mortgage Derham informed Donohue that if he would hold the certificate, which was dated January 25, 1904, and which by its terms drew interest for only six months, until January 25, 1905, the bank would pay a year's interest upon it. Thereupon they went together to the bank, and it promised to pay this year's interest if the certificate was held until January 25, 1905. Donohue agreed with Derham to hold it until that time, and that Derham should have the interest which the bank would then pay, and Derham indorsed the certificate. Counsel argue that the effect of this agreement was to substitute Donohue for Derham in the latter's relation to the bank, so that, if the bank failed to pay the certificate, the loss was Donohue's, and not Derham's. The position is untenable, because the transaction was concluded by the execution of the indorsement, the written contract by Derham to pay the certificate on due demand and notice, if the bank did not, and the delivery of this contract and the certificate to Donohue by Derham. That indorsement is utterly inconsistent with the theory that Donohue took the chance of the failure of the bank. It is in writing, its terms and legal effect are certain, and it must prevail.

Nor is the contention that since Donohue did not demand the payment of the certificate until January 25, 1905, Donohue assumed the risk of the insolvency of the bank meanwhile and thereby released Derham from his indorsement, more persuasive, because Donohue delayed his demand at the request of Derham and for his benefit, and Derham is thereby estopped from taking advantage, to the detriment of Donohue, of the delay which he caused.

Finally, counsel insist that the judgment should be reversed because in the notice of protest its date was January 25, 1904, when it should have been January 25, 1905, the date of the certificate was recited January 25, 1905, when it should have been recited January 25, 1904, and the notice failed to state that the certificate contained the words, "No interest after 6 months." They cite the following authorities in support of their argument that this notice did not inform Derham of the demand and refusal of payment of the certificate on January 25, 1905, when it fell due: Townsend v. Lorain Bank of Elyria, 2 Ohio St. 345, 353, 360, in which a note fell due on June 4, 1849, and a notice dated June 2, 1849, that it was presented and dishonored on that day, was held insufficient. Ransom v. Mack, 2 Hill (N. Y.)

Digitized by Google

587, 38 Am. Dec. 602, wherein a notice dated July 4th, that a note was presented and dishonored on that day when it was presented and dishonored on July 3d, was held bad; Etting v. Schuylkill Bank, 2 Pa. 355, 44 Am. Dec. 205, in which a notice dated on the second day of grace that payment of the note had been demanded and refused on that day, when it should have stated that the demand and dishonor were on the next day, was rejected; Wynn v. Alden, 4 Denio (N. Y.) 163, where a notice without date that the paper was presented and dishonored on "this day" was held bad; and Tevis v. Wood, 5 Cal. 393, in which a notice that the demand and dishonor were one day too late was held insufficient. It is conceded that these decisions strongly tend to sustain the contention of counsel. There are, however, decisions to the contrary. Ontario Bank v. Petrie, 3 Wend. 457; Crocker v. Getchell, 23 Me. 392; Journey v. Pierce, 2 Houst. (Del.) 176; 2 Daniel on Neg. Inst. § 984; Tiedemann on Commercial Paper, § 346. The rule upon this subject which prevails in the federal courts was stated by Story, J., in Mills v. United States Bank, 11 Wheat. 431, 436, 6 L. Ed. 512, in answer to a contention that a notice was fatally defective because it did not state who was the holder of the paper, because it misdescribed the date of the note and because it did not state that the demand had been made at the bank when the note was due. He said:

"No form of notice to an indorser has been prescribed by law. The whole object of it is to inform the party to whom it is sent that payment has been refused by the maker, that he is considered liable, and that payment is expected of him. It is of no consequence to the indorser, who is the holder, as he is equally bound by the notice, whomsoever he may be, and it is time enough for him to ascertain the true title of the holder when he is called upon for payment. The objection of misdescription may be disposed of in a few words. It cannot be for a moment maintained that every variance, however immaterial, is fatal to the notice. It must be such a variance as conveys no sufficient knowledge to the party of the particular note which has been dishonored. If it does not mislead him, if it conveys to him the real fact, without any doubt, the variance cannot be material, either to guard his rights or avoid his responsibility. * * * The last objection to the notice is that it does not state that payment was demanded at the bank when the note became due. It is certainly not necessary that the notice should contain such a formal allegation. It is sufficient that it states the fact of nonpayment of the note, and that the holder looks to the indorser for indemnity. Whether the demand was duly and regularly made is matter of evidence, to be established at the trial. If it be not legally made, no averment, however accurate, will help the case; and a statement of nonpayment and notice is, by necessary implication, an assertion of right by the holder, founded upon his having complied with the requisitions of law against the indorser."

This decision has been generally followed, and these rules may be said to be established in the national courts and to prevail in many of the state courts. Any notice of protest is sufficient which by express terms or by necessary implication conveys information to the indorser of the identity of the paper and that upon presentment, when due, payment has been neglected or refused. Mistakes and omissions in a notice which obviously could not have misled or prejudiced an indorser are not fatal to it. Bank v. Swann, 9 Pet. 33, 46, 9 L. Ed. 40; Bank v. Watterson, 2 Fed. Cas. No. 941; Cooper v. Gibbs, 6 Fed. Cas. No. 3194; Hodges v. Shuler, 22 N. Y. 114; Gates v.

Digitized by Google

Beecher, 60 N. Y. 518, 527, 19 Am. Rep. 207; Youngs v. Lee, 12 N. Y. 551; Bank of Cooperstown v. Woods, 28 N. Y. 561, 566; Smith v. Whiting, 12 Mass. 6, 7 Am. Dec. 25; Housatonic Bank v. Laflin, 5 Cush. (Mass.) 546, 548; Cayuga County Bank v. Warden, 1 N. Y. 413, 417; Rochester Bank v. Gould, 9 Wend. 280.

In the cases cited for the plaintiff in error the dates of the notices and the dates therein named on which the demands and dishonors were averred were within a few days of the due dates of the respective pieces of paper, so that the indorsers might have inferred that the demands and presentments were made on the wrong days. But in the case before us the indorser knew that the certificate which he had indorsed was dated on January 25, 1904, that it was due on January 25, 1905, and that he received this notice a short time after the latter date. The notice was dated January 25, 1904, and stated that on that day the certificate was duly presented for payment and that payment was demanded and refused. Derham knew that this was a mistake, for he knew that the certificate was issued to him and that he himself had possession of it on that day. Thus he knew it could not have been presented on the day stated in the notice. He knew that it fell due on January 25, 1905, and that the purpose of this notice was to inform him of its presentment and dishonor. "A statement of nonpayment and notice," says Mr. Justice Story in Mills v. United States Bank, "is, by necessary implication, an assertion of right by the holder, founded upon his having complied with the requisitions of law against the indorser." It is plain that the mistake in the recital of the date of the certificate in the notice and its failure to contain the clause, "No interest after six months," could not have misled Derham as to the identity of the paper, and there is no rational escape from the conclusion that by the terms of the notice and the necessary implication therefrom it sufficiently informed him of the presentment, demand, and dishonor of the certificate on the day when it fell due.

The judgment below must accordingly be affirmed; and it is so ordered.

HOOK, Circuit Judge (specially concurring). I concur in the result in this case, and in what is said excepting as to the application of the Minnesota statute of amendments. Congress has prescribed a rule sufficient for the guidance of national courts in this particular.

(155 Fed. 389.)

COLLIN COUNTY NAT. BANK OF McKINNEY, TEX., v. HUGHES.

(Circuit Court of Appeals, Eighth Circuit. July 10, 1907.)

No. 2,511.

1. APPEAL AND ERROR—DECISION—QUESTIONS PRESENTED BY RECORD.

Legal issues other than the one specifically presented for determination may properly be considered and determined by an appellate court, where they naturally arise and are pertinent to the question at issue and to further proceedings in the trial court.

Digitized by Google

2. COURTS—FEDERAL COURTS—JURISDICTION TO ENFORCE JUDGMENTS.

The jurisdiction of a national court over a controversy once lawfully acquired includes the power to enforce its judgment or decree, and this power may not be destroyed or restrained by the legislation or lack of legislation of the states.

3. SAME—WRIT OF SCIRE FACIAS TO REVIVE A JUDGMENT.

A Circuit Court of the United States has power to issue its writ of scire facias to revive its judgment and to prescribe a reasonable method of service thereof without the district where the judgment defendant has departed therefrom. Such power is derived from the Constitution and Rev. St. § 716 [U. S. Comp. St. 1901, p. 580], and cannot be restrained, limited, or rendered less efficacious by the statutes of a state.

4. SAME—MODE OF SERVICE.

The conformity act (Rev. St. §§ 914, 915, 916 [U. S. Comp. St. 1901, p. 684]) empowers a Circuit Court to use a similar remedy to that provided by a state statute to enforce its judgments, but does not require it to follow the method prescribed by a state statute in serving a writ of scire facias to revive a judgment on a nonresident defendant if it deems such method insufficient.

[Ed. Note.—State laws as rules of decision in federal courts, see notes to Wilson v. Perrin, 11 C. C. A. 71, and Hill v. Hite, 29 C. C. A. 553.]

On Petition for Rehearing.

For former opinion, see 152 Fed. 414, 81 C. C. A. 556.

Clayton C. Dorsey and William V. Hodges, for the motion.

Before SANBORN, HOOK, and ADAMS, Circuit Judges.

SANBORN, Circuit Judge. Counsel for Hughes have made a motion for a rehearing of this case upon four grounds: (1) That what is said in the opinion with reference to the practice upon a writ of scire facias to revive a judgment is obiter dictum; (2) that the use of the writ of scire facias to revive a judgment is abolished in Colorado, except in the manner prescribed by the statutes of that state; (3) that the method of service of the writ is prescribed exclusively by the statute of Colorado, and that it may not be otherwise served by the direction of the federal court to revive a judgment of that court in that state; and (4) that the service of the writ personally outside of the district of Colorado will not be due process of law under the decision in Pennoyer v. Neff, 95 U. S. 714, 24 L. Ed. 565.

1. What was said in the opinion upon the questions challenged was appropriate and logical in its relation to the decision of the actual issue presented, to wit, whether or not the order assailed in this case was a final order. While the specific legal issues other than the latter question were not expressly presented for adjudication, they naturally arose and were properly considered in view of the condition of the case and the necessity of proper action by the court below.

2. The jurisdiction of a national court over a controversy once lawfully acquired includes the power to enforce its judgment or decree, and this power may not be destroyed or restrained by the legislation or lack of legislation of the states, because it is granted by the Constitution and the acts of Congress, which are the supreme law of the land. Barber Asphalt Pav. Co. v. Morris, 66 C. C. A. 55, 59, 132 Fed. 945, 949. The writ of scire facias to revive a judgment

Digitized by Google

is founded upon the statute of 2 Westminster, c. 45, enacted in the thirteenth year of Edward I, or the year 1285. A scire facias to revive a judgment is a continuance of the original action, and is not a new action. The practice under the common law in case the writ of scire facias could not be served upon the defendant was to render judgment of fiat executio upon two returns of nihil. But Chief Justice Beasley in delivering the opinion of the Supreme Court of New Jersey in Elsasser v. Haines, 52 N. J. Law, 10, 18 Atl. 1095, 1098, said, and it is a rational statement, that there is no substantial difference between the judgment fiat executio and the judgment quod recuperet. So that it does not seem to be material to notice the form which the judgment in the case at bar may take under the scire facias issued. In the eighteenth volume of the Encyclopedia of Pleading and Practice, at page 1055, the statement is made that scire facias to revive a judgment is the usual method unless another is provided.

In 1789 the Congress granted to the Supreme Court and the Circuit and District Courts of the United States the power to issue writs of scire facias. Rev. St. § 716 [U. S. Comp. St. 1901, p. 580]. In 1822 in Delano v. Jopling, 1 Litt. (Ky.) 118, 120, the Court of Appeals of Kentucky held that a judgment rendered in the state of Virginia on a scire facias against special bail upon two returns of nihil was entitled to full faith and credit in the state of Kentucky, and sustained an action for judgment upon it. That court said:

> "A scire facias is styled a judicial writ, viz., a writ for the purpose of effectuating what has already been decided, or, in case of bail, to compel the bail to perform that which he hath solemnly undertaken of record; and the reason why the bail is summoned at all is out of abundant caution and tender regard to his rights, for the purpose of allowing him to show some matter which may have arisen since his undertaking, and which may exonerate him. Hence he is summoned to answer matters of record, and the judgment rendered of record after his undertaking, against his principal, is conclusive against him. There is therefore no necessity of taking the same care to bring him into court, in order to subject him to his undertaking, as there is with regard to defendants in original actions, where the matters in controversy are entirely en pais, and have never been settled or ascertained by judicial determination."

In 1858, in Battey, Ex'r, v. Holbrook, 77 Mass. 212, the Supreme Judicial Court of that commonwealth decided that after judgment had been rendered against a defendant, and he had removed from the local jurisdiction of the court, the writ of scire facias might still issue, "for," said the court, "the suit is in fact still pending in court, its remedy yet incomplete, and to be enforced as and when new breaches occur."

In 1840 one Comstock recovered a judgment in the Circuit Court of the United States for the District of Rhode Island in an action of debt in which the defendant had been duly served with process. In 1859 a writ of scire facias was sued out upon that judgment in Rhode Island, and was served personally upon the defendant in the state of Massachusetts, to which state he had moved and in which he was then residing. In 1860 an action was brought upon this second judgment in one of the trial courts of Massachusetts, and the plaintiff re-

Digitized by Google

covered. Upon a writ of error the Supreme Judicial Court of Massachusetts affirmed the judgment. It said:

"The scire facias was not a new action, but a continuation of the old one. Wright v. Nutt, 1 T. R. 389. It was indeed necessary that notice thereof should be given to the defendant before judgment thereon could legally be rendered. But, as the law prescribed no form of notice to a defendant out of the district where the court was held, it was for the court to cause such notice to be given as should be reasonable and enable him to appear and defend his rights. The notice given to the defendant was actual, personal, and seasonable, and though it was not in any form which had been ordered by the court, and was not proved by a return of an officer of the court, as such officer, but by his affidavit, yet it was adopted by the court as sufficient; and the judgment thereafter rendered must be deemed valid, and this action thereon be sustained. The Circuit Court could not be ousted of its jurisdiction by the absence of the defendant from the district in which the action was pending." Comstock v. Holbrook, 82 Mass. 111, 113.

In this state of the law and the practice the territory of Colorado in the year 1861 enacted a statute to the effect that the common law of England and all acts and statutes of the British Parliament prior to the fourth year of James I, of a general nature and not local to that kingdom, should be the rule of decision and be considered in full force until repealed by legislative authority. 2 Mills' Ann. St. § 4184. There can be no doubt that, under the common law, the foregoing statutes and decisions, and the established practice, the Circuit Court of the United States had power to issue its writ of scire facias and to prescribe a reasonable method of service thereof without the district of the court where a defendant in a judgment had departed from its district. In 1877 the Legislature of Colorado provided that a judgment in a civil action might be revived by filing a petition, issuing an order to show cause and serving it on the defendant in the same manner as summonses were required to be served in civil actions. Mills' Ann. Code, §§ 241–244. The statutes of Colorado also provided that a summons in a civil action might be served by publication where the defendants were not residents. Mills' Ann. Code, § 41. At the time of the issue of this scire facias there was a rule of the court below in force in the district of Colorado, to the effect that:

"Writs of execution and other final process issued on judgments and decrees rendered in this court and the proceedings thereon had shall be the same, except their style, as are now or may be hereafter used in the highest court of original and general jurisdiction in this state."

But this rule is not controlling in the issue and service of writs of scire facias because they are not writs of execution or other final process, nor are they proceedings thereon had, and, even if the rule were applicable, it would still be within the power of the court below to vary its process and its manner of service by order so as to attain the ends of justice.

It will be perceived from the statutes and decisions which have been cited that the power to issue the writ of scire facias and to serve it in such manner as the court below deemed wise and reasonable was vested in that court prior to the Colorado act of 1877 and that no additional power was granted by that act.

In Elsasser v. Haines, 52 N. J. Law, 10, 18 Atl. 1095, Chief Justice

Digitized by Google

Beasley, in an exhaustive and learned opinion which he delivered in the year 1889 for the Supreme Court of New Jersey, expressed the opinion of that court that a judgment upon two returns of nihil upon a scire facias issued in the state of Pennsylvania upon a bail bond was according to the course of the common law and of the law of that state, and was conclusive in the state of New Jersey and the action upon it was sustained.

Counsel insist that this proceeding by scire facias cannot be sustained, and they cite in support of their view Humiston v. Smith, 21 Cal. 129, 135, Cameron v. Young, 6 How. Prac. (N. Y.) 372, Hughes v. Shreve, 60 Ky. 547, and De Baca v. Wilcox, 68 Pac. 922, 923, 11 N. M. 346, decisions which hold that the writ of scire facias to revive a judgment is abolished in these various jurisdictions by the provisions of their codes that there shall be one form of civil action. It is enough to say in answer to these opinions that they do not apply to suits or proceedings in the national courts, that this court has previously expressed a different opinion, and that its view has been sustained by the Supreme Court. U. S. v. Insley, 54 Fed. 221, 223, 4 C. C. A. 296, 298; Insley v. U. S., 150 U. S. 512, 14 Sup. Ct. 158, 37 L. Ed. 1163. The same conclusion was earlier adopted in England. 2 Coke's Inst. 472. In Brown v. Wygant & Leeds, 163 U. S. 618, 16 Sup. Ct. 1159, 41 L. Ed. 284, the Supreme Court held that two returns of nihil constituted sufficient service upon a resident of a state.

There are decisions cited by counsel which determine other questions, but none have been brought to our attention which hold that a Circuit Court may not issue and direct the manner of service of a writ of scire facias upon its own judgment so as to warrant it in entering a judgment of revivor thereon. In Owens v. Henry, 161 U. S. 642, 16 Sup. Ct. 693, 40 L. Ed. 837, however, the Supreme Court decided that a judgment upon two returns of nihil in the state of Pennsylvania upon a scire facias to revive a judgment of a court of that state would not sustain an action upon the revived judgment in the state of Louisiana when the original judgment had become barred by the statute of the latter state. The court held that, if the scire facias was a new action, there was no sufficient service because the defendant was a resident of Louisiana at the time of the returns and had received no notice, and that, if it was a continuance of the original action, the effect of the judgment of revivor was to keep in force the local lien in the state of Pennsylvania, and that it did not have the effect to remove the bar of the statute of limitations in the state of Louisiana. In Bickerdike v. Allen, 157 Ill. 95, 41 N. E. 740, 29 L. R. A. 782, may be found a decision that the service of a writ of scire facias issued upon a judgment in another state upon a resident of the state of Illinois by publication in the other state would not sustain an action upon the judgment of revivor rendered thereon in the state of Illinois under the doctrine of Pennoyer v. Neff, 95 U. S. 714, 24 L. Ed. 565. And there is an opinion in Weaver v. Boggs, 38 Md. 255, that a judgment of revivor on two returns of nihil in the state of Pennsylvania will not sustain an action upon the judg-

Digitized by Google

ment of revivor in the state of Maryland after its statute of limitations has run.

A careful review and reconsideration of these authorities show that the common law, the practice under it, and the decisions of the courts that a judgment of revivor may be rendered in the jurisdiction in which the original judgment was recorded upon the issue of a writ of scire facias and its service in such manner as the court may direct upon the defendant who is without the territorial jurisdiction of the court in which the record remains, is undisputed. But there is a controversy among the authorities over the effect of such a judgment in the state of the residence of the defendant at the time the writ of scire facias is served upon him. That controversy is not presented, and will not be presented in this case, and hence it is unnecessary farther to consider it.

But counsel contend that the act of conformity compelled the Circuit Court to adhere to the method of service of the writ of scire facias prescribed by the statutes of Colorado. There are two answers to this contention. The first is that the power of the Circuit Court to issue and to serve its writ of scire facias was derived from the Constitution and the act of Congress, and that it cannot be restrained, limited, or made less efficacious by the statutes of the state. The second is that the act of conformity does not require the Circuit Court to follow the method of service of its writ prescribed by the act of Colorado of 1877. Three sections of the conformity act are discussed by counsel. Section 914, Rev. St. [U. S. Comp. St. 1901, p. 684] is mandatory. It declares that the practice, pleadings, and forms and modes of proceeding in civil causes other than equity and admiralty cases shall conform as near as may be to the practice, pleadings, and forms and modes of proceeding existing in like causes in the state courts. It has no application to this case because it relates exclusively to proceedings before judgment. It may not be futile to notice the fact, however, that this is the most peremptory section of this act, and that nevertheless the Supreme Court and this court have held that strict conformity to the practice and proceedings in the state courts is impracticable, and that this section does not require the courts of the United States to adopt any rule of pleading, practice, or procedure enacted by state statute or announced by the decision of a state court which would restrict their jurisdiction or unwisely encumber the administration of justice in their tribunals. O'Connell v. Reed, 5 C. C. A. 586, 592, 56 Fed. 531, 536; Shepard v. Adams, 168 U. S. 618, 18 Sup. Ct. 214, 42 L. Ed. 602. Thus it has been held that a variance from the state practice in (1) the signature of the summons (Martin v. Criscuola, 10 Blatch. 211, Fed. Cas. No. 9,159; Dwight v. Merritt [C. C.] 4 Fed. 614); (2) its service by a private party (Schwabacker v. Reilly, 2 Dill. 127, Fed. Cas. No. 12,501); (3) the time and form and character of the charge to the jury (Railway Co. v. Horst, 93 U. S. 291, 300, 23 L. Ed. 898; Association v. Barry, 131 U. S. 100, 120, 9 Sup. Ct. 755, 33 L. Ed. 60); (4) the motions for new trials (Missouri Pac. Ry. Co. v. Chicago & A. Ry. Co., 132 U. S. 191, 10 Sup. Ct. 65, 33 L. Ed. 309); (5) the effect of

Digitized by Google

a special appearance (Southern Pac. Co. v. Denton, 146 U. S. 202, 13 Sup. Ct. 44, 36 L. Ed. 942); (6) the method of reviewing judgment; and (7) the time within which an answer should be made after service of the summons, and variances in many other respects, constitute no violation of this peremptory section.

Section 915 provides that in common-law cases in the Circuit and District Courts the plaintiff shall be entitled to similar provisional remedies as those provided by the laws of the state in which the courts are held, and that the Circuit and District Courts may by general rules adopt state laws with reference thereto. Section 916 provides that the party recovering a judgment in any common-law cause in the Circuit or District Court shall be entitled to similar remedies on the same by execution or otherwise to reach the property of the judgment debtor to those that are provided in like causes by the laws of the state in which such court is held, or by any such laws as are thereafter enacted which may be adopted by general rules of such Circuit or District Court, and that such courts may from time to time by general rules adopt such state laws as may thereafter be in force in such state. It will be noticed that these sections do not limit the power of the court to determine how its process shall be served after judgment, but only provide that the parties shall be entitled to similar remedies to those provided in like cases by the laws of the state. The Supreme Court has held that only those statutes in force at the time of the passage of this act, to wit, June 1, 1872, were adopted thereby, and that all subsequent statutes, must be adopted by general rules of the Circuit Courts or they are not in force. Lamaster v. Keeler, 123 U. S. 376, 391, 8 Sup. Ct. 197, 31 L. Ed. 238. This court has held, however, that, in the absence of the proof of any general rule, a general practice may become a rule, and that, when the general practice is to use the remedies provided by the state statutes, the appellate court will presume, in the absence of proof, that these have been adopted by a general practice or a general rule. Logan v. Goodwin, 109 Fed. 490, 495, 43 C. C. A. 658, 663; Citizens' Bank v. Farwell, 56 Fed. 570, 574, 6 C. C. A. 24, 28. It may therefore be assumed in the words of section 916 that a party recovering a judgment in the Circuit Court is "entitled to similar remedies upon the same by execution or otherwise" to those which have been provided by the statutes of Colorado. Now, the statutes of Colorado provide a remedy for the revivor of a judgment by scire facias and prescribe the method of the service of the writ of scire facias. The plaintiff, therefore, might have availed himself of this method of service if it was sufficient. If, however, it was, in the opinion of the Circuit Court, insufficient, that court had the power under the common law and under this statute to adopt and use similar remedies by directing the service to be made in such way as in its opinion would give to the defendant reasonable notice that the suit in which the judgment had been rendered would be continued, and that the judgment would be revived in accordance with the practice at common law under the decisions in Kentucky, Massachusetts, and New Jersey, which portray it. In other words, before, and in the absence of, the Colorado statute of 1877,

Digitized by Google

the United States courts had the power to issue the writ of scire facias and to cause it to be served according to the practice at common law by a personal service of the writ upon the defendant without the territorial jurisdiction of the court in which the record was found and upon such service it had the right to enter its judgment. When the Colorado statute was enacted, it had the option to adopt the specific method of service prescribed by that statute, or to refuse to adopt it. The greater includes the less, and hence it had the right to prescribe the method of service of its writ and to use a similar remedy by such service as it thought proper both under the common law and under the act of conformity. The latter act did not deprive the court below of the right or the power to cause the service of its writ upon two returns of nihil and by such personal service as it deemed necessary to give proper notice to the defendant.

3. Counsel argue that the service of the writ of scire facias upon the defendant personally without the jurisdiction will not sustain the revived judgment under the rule in Pennoyer v. Neff. No decision of any court has been called to our attention to the effect that such service will not sustain a revived judgment in the jurisdiction in which the record of the original judgment is found. The Massachusetts and New Jersey cases hold that it will sustain such judgments both in that and in other jurisdictions. There are decisions that the statute of limitations bars a proceeding of scire facias to revive a judgment within the same time that it bars an action for the same purpose (Lafayette County v. Wonderly, 92 Fed. 313, 34 C. C. A. 360; Wrightman v. Boone County, 88 Fed. 435, 31 C. C. A. 570), and that an exemption by state statute of a homestead from execution exempts it from execution under section 916, Rev. St. (Fink v. O'Neil, 106 U. S. 272, 1 Sup. Ct. 325, 27 L. Ed. 196). In Kirk v. U. S. (C. C.) 124 Fed. 324, 335, Kirk v. U. S. (C. C.) 131 Fed. 331, Kirk v. U. S., 137 Fed. 753, 70 C. C. A. 187, there was a holding that an action could not be maintained in the state of New York upon a judgment upon a bail bond based upon a service of a writ of scire facias without the district of the record of the bail bond. But a scire facias upon a bail bond is the commencement of a new action, while a scire facias upon a judgment is a continuance of an old action. Moreover, in the Kirk Cases it is evident that the established practice to serve writs of scire facias beyond the jurisdiction of the record and to enter judgments thereon and the decisions in Kentucky, Massachusetts, and New Jersey which portray this practice were not called to the attention of the courts; for the Court of Appeals said that it was cited to no authority holding to the contrary of its conclusion where the proceeding was by scire facias to revive or continue a former proceeding in the nature of an original action. Kirk v. U. S., 137 Fed. 755, 70 C. C. A. 187.

The conclusion of the whole matter is:

(1) The common law and the statute of 2 Westminster were in force in Colorado from 1861, save as otherwise provided by statute.

(2) The Circuit Court of the United States had the power to issue the writ of scire facias to revive a judgment according to the course of the common law under Rev. St., § 716, in the absence of any special statute of the state of Colorado upon the subject.

Digitized by Google

(3) The statute of Colorado of 1877 granted to that court no new right or remedy, but was cumulative and simply gave to it an additional remedy to one which already existed.

(4) The conformity act (sections 914, 915, 916, Rev. St.) empowered the Circuit Court to use a similar remedy to that provided by the state statute. The Circuit Court of the United States under the common law and the practice thereunder and the statutes to which reference has been made had the jurisdiction to issue a writ of scire facias to revive the judgment in question and to cause it to be served personally without the district upon the defendant in the record within the district.

(5) The effect of the judgment rendered upon this service in the jurisdiction of the present residence of the defendant is left undetermined, and the motion for the rehearing is denied.

(155 Fed. 397.)

WESTINGHOUSE, CHURCH, KERR & CO. v. CALLAGHAN.

(Circuit Court of Appeals, Eighth Circuit. July 10, 1907.)

No. 2,547.

1. MASTER AND SERVANT—NEGLIGENCE OF FELLOW SERVANTS.

One who enters the employment of another thereby assumes the risk of the negligence of his fellow servants in the performance of all acts which they do while they are not discharging a positive duty of the master.

[Ed. Note.—For cases in point, see Cent. Dig. vol. 34, Master and Servant, § 567.]

2. SAME—DUTY OF CARE FOR SAFETY OF PLACE AND OF APPLIANCES WHERE CHARACTER NECESSARILY CHANGES WITH WORK, SERVANT'S NOT MASTER'S.

The duty of caring for the safety of a place or of appliances in cases in which the work which the servants are employed to do necessarily changes the character of the place or of the appliances as to safety as the work progresses is the duty of the servants to whom the work is intrusted, and it is not the duty of the master.

3. SAME—VICE PRINCIPAL—FELLOW SERVANTS.

All who enter the employment of a common master to accomplish a common undertaking are prima facie fellow servants, although their grades of service are different, and some direct and supervise the men subject to their command and their work, while others perform the labor.

[Ed. Note.—For cases in point, see Cent. Dig. vol. 34, Master and Servant, §§ 451, 452.

Who are fellow servants, see notes to Northern Pac. R. Co. v. Smith, 8 C. C. A. 668; Flippen v. Kimball, 31 C. C. A. 286.]

4. SAME—RISK OF SUPERVISION BY FELLOW SERVANT ASSUMED.

The servant assumes the risk of the negligence of his superior fellow servant in the direction of the men and the work to the same extent that he assumes the risk of the negligence of the fellow laborer by his side who is engaged in performing the work.

[Ed. Note.—For cases in point, see Cent. Dig. vol. 34, Master and Servant, §§ 567, 570.]

5. SAME—VICE PRINCIPAL—DEPARTMENTS OF BUSINESS.

The homogeneous business of a master cannot be divided into distinct and separate departments under the rule in Railroad Co. v. Baugh, 13 Sup. Ct. 914, 149 U. S. 368, 383, 37 L. Ed. 772, by the testimony to that

Digitized by Google

effect of his servants, and such testimony is incompetent for this purpose. The nature of the business alone can separate it into departments.

[Ed. Note.—For cases in point, see Cent. Dig. vol. 34, Master and Servant, §§ 475–479.]

6. SAME—VICE PRINCIPAL—FACTS—CONCLUSION.

The plaintiff and D. were employed by the defendant in dismantling heavy machinery in the World's Fair buildings. D. was foreman under a superintendent who was under a manager there. The day before the accident a heavy wooden frame 25 feet high had been erected and temporarily fastened in place with guy ropes under the direction of D. to be used to lift and move the heavy parts of an engine. On the day of the accident the plaintiff and four other men were working under D. to permanently secure this frame in place. D. directed the plaintiff to go upon the frame, and, after he had climbed there for the purpose of moving one of the ropes which held this frame in place so that they could use it at another place as a permanent guy rope, D. untied it below, and the frame fell and injured the plaintiff.

Held, D. was not a vice principal, but he was a fellow servant of the plaintiff, and the defendant was not liable for his negligence.

[Ed. Note.—For cases in point, see Cent. Dig. vol. 34, Master and Servant, §§ 451, 452.]

(Syllabus by the Court.)

In Error to the Circuit Court of the United States for the Eastern District of Missouri.

Percy Werner, for plaintiff in error.

James J. O'Donohoe, for defendant in error.

Before SANBORN and HOOK, Circuit Judges, and PHILIPS, District Judge.

SANBORN, Circuit Judge. Westinghouse, Church, Kerr & Co., a corporation, was engaged in dismantling heavy machinery in the World's Fair buildings at St. Louis. Caldwell was its manager and Oldham its superintendent there. According to the most favorable evidence in the record for the plaintiff below, Callaghan, he had worked for this corporation during the Fair, had left his employment for some time, and about the 1st of December, 1904, he returned and applied to Caldwell for his old job. Caldwell referred him to Oldham, the superintendent who employed him. He then labored there three weeks with a gang of men in the power house taking down props, and Douglas worked in the machinery hall with another gang. Douglas was the foreman, and ordered the work to start promptly and gave the plaintiff his orders. On December 24, 1904, Oldham asked the plaintiff if he would work upon Christmas Day, and offered him time and a half. He accepted the offer, and reported to Oldham that he was ready to work. Douglas on the night before Christmas ordered him to work and to be out early. On Christmas Day Callaghan, Douglas, Stanley, Dorig, and two other men who had agreed to work on that day appeared and Douglas ordered them to put permanent guy ropes on a heavy wooden frame which had been erected the day before under his direction for the purpose of lifting and removing the heavy materials of which the engines were composed. This frame consisted of four upright pieces of timber 8 by 8, 25 feet long. Upon the east and west sides heavy timbers 14 feet long had been mortised into the up-

Digitized by Google

rights, and there were timbers lying across these from north to south. This frame was temporarily held in position by guy ropes. In order to substitute permanent guy lines for the temporary ones, Douglas, who was a rigger and the foreman of this gang, directed one of the men to get some ropes, and ordered the plaintiff to go upon the northwest corner of the frame. After he and Stanley had climbed upon this frame Douglas directed the latter to untie a certain temporary guy rope, so that it might be moved to the corner of the structure, and there used for a permanent line, but Stanley was unable to loosen it. Thereupon Douglas untied it below where he was at work, and the frame immediately fell and injured the plaintiff. One of the laborers testified that he worked in the boiler room department, and that this was 20 or 30 yards from the department in which the engines were being dismantled. Another testified that the power house and machinery hall were different departments, which were all run by the same foreman, and that he worked in the department for dismantling engines under Douglas. Douglas was paid higher wages than the other employés. He directed them what to do and where to work, and also engaged in manual labor with them.

At the close of the evidence, the defendant requested the court to instruct the jury to return a verdict in its favor, on the ground that the negligence which caused the injury was that of the plaintiff's fellow servant, Douglas, and not that of the defendant; but the court denied the request, and this ruling is assigned as error. The testimony of the servants that the work of dismantling the machinery in which they were employed by the defendant was in different departments, that one of these was the dismantling of the machinery in the power house and another the dismantling of the machinery in machinery hall, was futile and immaterial. Its evident purpose was to endeavor to bring the case under the rule in Railroad Co. v. Baugh, 149 U. S. 368, 383, 13 Sup. Ct. 914, 920, 37 L. Ed. 772, to the effect that the superintendent of a separate department of a vast and diversified business may be a vice principal. "But," said the court in that case, "this rule can only be fairly applied when the different branches or departments of service are in and of themselves separate and distinct." But the dismantling of the machinery in the buildings at the World's Fair was single and homogeneous, and the testimony of those employed in it was both incompetent and insufficient to divide it into distinct departments. The character of the business and that alone separates it into distinct departments and it cannot be so divided by the testimony of those who are employed to carry it on.

The frame which fell was constructed under the direction of Douglas. He directed Callaghan to station himself upon it and he untied the guy rope which permitted it to fall. Callaghan assumed the risk of the negligence of his fellow servants, and, if Douglas is conclusively shown by this evidence to have been the fellow servant of the plaintiff, the latter was not entitled to recover here, and the court should have instructed the jury to return a verdict for the defendant. "Prima facie all who enter into the employ of a single master are engaged in a common service, and are fellow servants and some other line of demarcation than that of control must exist to de-

Digitized by Google

stroy the relation of fellow servants." Railroad Co. v. Baugh, 149 U. S. 368, 384, 13 Sup. Ct. 914, 920, 37 L. Ed. 772. The servant assumes the risk of the negligence of his superior fellow servant in the latter's direction of the men and of the work to the same extent that he assumes the risk of the negligence of the fellow laborer by his side who is engaged in performing the work. American Bridge Co. v. Seeds, 75 C. C. A. 407, 410, 144 Fed. 605, 608, and cases there cited.

The duty of the master to exercise ordinary care to make and keep reasonably safe the place in which, and the machinery and appliances with which, his servants are at work, does not extend to cases in which the work which the servants are employed to do necessarily changes the character of the place or of the appliances as to safety as the work progresses. But the duty of care for the safety of the place and of the machinery and appliances in such cases devolves upon the servants to whom the work is intrusted. American Bridge Co. v. Seeds, 75 C. C. A. 407, 415, 144 Fed. 605, 613, and cases there cited. If the negligent act of the servant which causes the injury is done in the discharge of a positive duty of the master, then the negligence therein is the negligence of the master. If it is done in the discharge of any other duty of the employé, it is the negligence of the servant, the risk of which his fellows have assumed. Weeks v. Scharer, 111 Fed. 330, 335, 49 C. C. A. 372, 377.

In Coal Co. v. Johnson, 6 C. C. A. 148, 56 Fed. 810, a foreman of a gang of 10 or 12 men worked in a mine under a pit boss, who worked under a superintendent. While one of this foreman's gang was digging a hole in the floor of a room in the mine by his direction to set a drilling machine, the foreman struck the roof above him with a pick to make a hole there for the same machine, and thereby brought down upon the plaintiff a mass of stones and earth, which seriously injured him. The foreman had authority to direct the men in his gang when and where to work and what to do. It was his duty to prop the roofs of the rooms with timber, to sound and inspect them so that they would be reasonably safe, to drill holes in their faces, charge them with powder, and fire it at the proper times to bring down the coal. This court held that the foreman was not a vice principal, but a fellow servant of the workmen. In Minneapolis v. Lundin, 7 C. C. A. 344, 58 Fed. 525, the city engineer was the general superintendent of all the work of the city. He appointed a superintendent of sewer construction. The latter employed a foreman who superintended and directed the work of a crew of about 50 men. This foreman was empowered to hire and discharge men, and to direct them when, where, and how to work. He ordered one of his gang to reload a hole which had been drilled in a rock, and had been filled with dynamite which had failed to explode, but he did not inform the workman that dynamite remained in the hole. The workman, in ignorance of the presence of the dynamite, proceeded to drill out the hole, the dynamite exploded, and he was injured; but the foreman was held to be his fellow servant. To the same effect are Kansas & A. V. Ry. Co. v. Waters, 16 C. C. A. 609, 70 Fed. 28, and The Miami (D. C.) 87 Fed. 757.

Digitized by Google

The principles and authorities to which reference has been made leave no alternative in the case in hand. The plaintiff and Douglas were engaged in the same work, the work of dismantling heavy machinery, and at the moment of the accident in securing in place for this purpose, a frame which had just been erected and which was held in place by temporary guy ropes, a work which necessarily continually changed the character of the place where, and the appliances with which they were working, as to safety. It was the duty of these servants, of Douglas and Callaghan, and not the duty of the master, to care for the safety of this place in so far as that safety was conditioned by the frame which they were securing in place and their manipulation of it. Douglas was not a vice principal of the master, because he was neither a general manager nor a superintendent of the entire undertaking or of any distinct department of a vast and diversified business. He was not a vice principal because the performance of the specific act which caused the injury was not a part of the positive duty of the master, but one of the duties of the servant. In the performance of this act and of all his acts in relation to this frame the evidence is conclusive that he was discharging no positive duty of his master, but the ordinary duty of a servant. He was, therefore, in the performance of these acts a fellow servant of the plaintiff and the defendant was not liable.

The judgment below must accordingly be reversed, and the case must be remanded to the Circuit Court, with directions to grant a new trial; and it is so ordered.

(155 Fed. 401.)

VERA CRUZ & P. R. CO. v. WADDELL et al.

(Circuit Court of Appeals, Fourth Circuit. July 9, 1907.)

No. 708.

1. APPEAL AND ERROR—REVIEW—PRESUMPTIONS—TRIAL BY COURT.

It matters little whether a court trying a case without the intervention of a jury formally excludes evidence which it has necessarily had to hear in order to determine its relevancy at the time when offered, or at the end, when it considers the whole with a view of maturing its judgment, for the fact that it remains in the record does not necessarily imply that it was improperly considered in making the final decision.

[Ed. Note.—For cases in point, see Cent. Dig. vol. 3, Appeal and Error, § 3766.]

2. SAME—FINDINGS OF FACT.

Reversal of the lower court's judgment as to the facts will only be made when such judgment is shown to be against the clear preponderating weight of all the evidence.

[Ed. Note.—For cases in point, see Cent. Dig. vol. 3, Appeal and Error, § 3974.]

3. SAME—PRESUMPTION.

Where the whole testimony has not been incorporated in the record, it will be presumed that such testimony preponderates in favor of and sustains the judgment of the trial court.

[Ed. Note.—For cases in point, see Cent. Dig. vol. 3, Appeal and Error, § 3673.]

Digitized by Google

4. SAME—FINDINGS OF FACT—SUFFICIENCY TO SUPPORT JUDGMENT.

Where findings of fact are specifically made and filed by the trial court sitting without the intervention of a jury, and no exceptions are taken to such findings, no other or additional findings are asked, and the testimony in full is not incorporated in the record, such findings will be taken as true, and the appellate court in passing upon the case will only reverse in case it finds the judgment rendered to be contrary to the facts so found and set forth by the trial court.

[Ed. Note.—For cases in point, see Cent. Dig. vol. 3, Appeal and Error, § 3673.]

In Error to the Circuit Court of the United States for the District of Maryland.

Carroll T. Bond and J. S. Lemmon (Marbury & Gosnell, on the briefs), for plaintiff in error.

Edward Duffy and William C. Scarritt (Bond, Robinson & Duffy and Scarritt, Scarritt & Jones, on the briefs), for defendants in error.

Before PRITCHARD, Circuit Judge, and WADDILL and DAYTON, District Judges.

DAYTON, District Judge. This case comes here upon a writ of error to a judgment rendered by the Circuit Court of the United States for the District of Maryland. The original action was one in assumpsit instituted by the defendants in error, who will hereinafter be called the "engineers," against the plaintiff in error, hereinafter to be called the "railroad company," in the superior court of Baltimore City, and removed by the defendant railroad company to said United States Circuit Court. Attachment in the original proceeding was sued out and served upon Allan McLane, receiver of the Maryland Trust Company, and he, in the course of the proceeding, confessed assets in his hands, as such garnishee, sufficient to pay plaintiff's demand. The defenses interposed were substantially the general issue of nonassumpsit, and the case came on for trial by the court under express stipulation waiving trial by jury, and judgment was rendered in favor of the plaintiff engineers against the defendant railroad company on February 24, 1906, for $10,632.10, principal, and $850.56, interest, after the court had filed in the record its findings of fact and conclusions of law, and a written opinion setting forth its reasons therefor.

The record is voluminous, but only a very brief statement of facts will be necessary. The railroad company, a West Virginia corporation, engaged in the construction of a line of railroad in Mexico, by contracts in the nature of accepted written propositions, employed the plaintiff engineers substantially to furnish plans and specifications for, and inspect and supervise the construction of, the bridges on said railroad line —some 208 in number. In addition to this, said engineers were called upon and furnished plans for an ocean pier at Vera Cruz, and supervised the construction of the company's shops at Tierra Blanco, and performed other services, and incurred expenses not necessary here to set forth in detail. The work involved a period of over three years, and, at the end these engineers rendered to the railroad company their account for these services, set forth in 72 specific items, showing a total of $123,215.03, which, after allowing payments of $108,591.45,

Digitized by Google

left, as they claimed, a balance of $14,623.58 due and unpaid to them. The sole controversy in the case turns upon the integrity of this account, and whether proper and sufficient evidence has been adduced to sustain it.

Many exceptions to the testimony were taken, motions were made to strike out and exclude testimony, prayers were made for "instructions or declarations by the court as to the law of the case" in the course of the hearing, and numerous assignments of error are now based upon the trial court's action in overruling these exceptions and motions and denying these prayers. We have carefully considered all these, and, for reasons following, we believe them to be without merit.

It matters little whether a court, trying by agreement a case in lieu of a jury, shall formally exclude evidence which it has necessarily had to hear in order to determine its relevancy, at the time when offered, or at the end, when it considers the whole with a view of maturing its judgment, for, as said in Miller v. Houston City St. Ry. Co., 55 Fed. 366, at page 372, 5 C. C. A. 134, 139:

> "The admission of evidence in a case being tried by a court without the intervention of a jury does not require the nice distinction of ruling that it does when it is to go to a jury. And the fact that testimony is given in an answer, or read in a deposition, does not necessarily imply that it is improperly considered in the final examination and conclusion of the case. The same judicial mind that would exclude it from a jury can as readily set it aside upon a final consideration; and, where there appears sufficient evidence to justify the conclusions reached, the presumption is that the irrelevant testimony, although heard and not positively excluded by order, was set aside eventually, and not considered to the injury of the plaintiff in error."

And in this connection the words of Mr. Justice Shiras in Holmes v. Goldsmith, 147 U. S. 150, at page 164, 13 Sup. Ct. 288, 292, 37 L. Ed. 118, are deemed pertinent:

> "The modern tendency, both of legislation and of the decisions of courts, is to give as wide a scope as possible to the investigation of facts. Courts of error are specially unwilling to reverse cases because unimportant and possibly irrelevant testimony may have crept in, unless there is reason to think that practical injustice has been thereby caused."

The court below has set forth in six separate paragraphs the facts involved, and the record nowhere discloses any exceptions taken to these findings, and no requests made for other or additional findings, and, although very voluminous by reason of the extended bills of exceptions, prayers for instructions, and assignments of error, it does not set forth the testimony upon which these findings are based, save and except to the extent that the bills of exceptions afford summaries of certain portions thereof.

We are convinced that the brief statement and application of a few principles governing appellate courts in passing upon cases like this, involving only questions of fact, will render wholly unnecessary a detailed consideration of this multitude of exceptions and assignments of error. And these principles are so fundamental and universal as to require no citation to the vast number of decisions establishing them.

First. Reversal of the lower court's judgment as to the facts will only be made when such judgment is shown to be against the clear preponderating weight of all the testimony.

Digitized by Google

Second. Where the whole testimony has not been incorporated in the record, it will be presumed that such testimony preponderates in favor of, and sustains, the judgment of the trial court.

Third. Where findings of fact are specifically filed by the trial court, sitting without intervention of a jury, and no exceptions are taken to such findings, no other or additional findings are asked, and the testimony in full is not incorporated in the record, such findings will be taken as true, and the appellate court, in passing upon the case, will only reverse it in case it finds the judgment rendered to be contrary to the facts so found and set forth by the trial court.

Under these principles, it is clearly apparent that the judgment of the lower court in this case must be in all respects sustained. And in justice to that court we feel constrained to state that, by what we have said herein, we do not intend to imply that improper and irrelevant testimony under the peculiar circumstances involved was admitted and considered. In the course of the trial the learned judge presiding, in passing upon the motions to strike out the testimony excepted to, said:

"I think that those motions should not prevail because the testimony that you move to strike out is all in one shape or another material and pertinent. It all has some force. How much weight or probative force is to be given to it is another matter, because this motion does not go to that. This motion is based on the theory that it is altogether inadmissible for any purpose for which it is offered. Now, it seems to me that it is admissible for some purpose or another. Some of your criticism goes to the exactness of the testimony. On the whole consideration of the matter, I admit the testimony for some weight, for some probative force as to each item. Of course, as to how much is a question for after consideration, but I will refuse the motions to strike out."

A careful consideration of the 14 bills of exceptions setting forth summaries of the evidence excepted to has convinced us that he was entirely right in this ruling, and such consideration further convinces us that he was entirely right in the final conclusions reached by him, for from this record as it is before us comes the abiding conviction that this railroad company, after securing the efficient services of these engineers—men standing in the forefront of their profession, and of approved character for probity—has sought by technicalities to escape its liability for the just and contract compensation due from it for such services. The appeal bond in this case was in the penalty of $1,000, conditioned to pay damages and costs. The formal order of judgment is not set forth in the record, and we are wholly unable to determine whether provision was made in it for the payment of interest upon the principal of the debt from the date of the judgment until its payment. To such interest plaintiff engineers are clearly entitled. More than a year has already elapsed since this judgment was rendered.

Out of abundance of caution, therefore, we will remand this cause to the court below, with direction, if such order of judgment does not already so provide, it be corrected so as to make full provision for the payment of such interest. And, affirming, as we do, the court below in its adjudication of the principles involved, it follows that defendants in error must recover of the plaintiff in error their costs in this court expended.

Digitized by Google

MEMORANDUM DECISIONS.

(154 Fed. 1002.)

CRAFT, Internal Revenue Collector, v. SCHAFER. (Circuit Court of Appeals, Sixth Circuit. June 26, 1907.) No. 1,589. On rehearing. Petition dismissed. For former opinion, see 153 Fed. 175, 82 C. C. A. 349. Before SEVERENS and RICHARDS, Circuit Judges, and COCHRAN, District Judge.

RICHARDS, Circuit Judge. In this case we held (see our opinion of March 5, 1907, 153 Fed. 175)[1] that section 3176 of the Revised Statutes [U. S. Comp. St. 1901, p. 2068] does not apply in the collection of the special tax exacted for the sale of oleomargarine, so as to authorize the assessment of a penalty of 50 per cent. of the tax for a neglect or refusal to make a return; and, further, that a tax of $6 per annum for selling oleomargarine not artificially colored, which was exacted from certain dealers at substantially the same time and for the same period that the tax of $48 per annum for selling artificially colored oleomargarine was collected, ought to be refunded. The case has been reargued, but the conclusions we reached after the first hearing have not been disturbed. At the same time, we think we probably went to an unnecessary length in stating: "The oleomargarine acts are complete in themselves. They either contain provisions of their own for the enforcement of the tax, or they incorporate such sections of the internal revenue laws as Congress thought ought to be made applicable. Section 3176 of the Revised Statutes was not one of those sections, or Congress would have said so, making it applicable in the enforcement of the oleomargarine tax. This has been the holding in Re Kearns, Collector (D. C.) 64 Fed. 481, and in Re Kinney (D. C.) 102 Fed. 468, not to mention other analogous cases." By this statement, we adopted the reasoning in the Kearns and Kinney Cases, and inferentially passed upon the applicability of a number of sections of the internal revenue law which, we are informed, are being used, by direction of the Commissioner, in the enforcement of the oleomargarine tax. It was only necessary for us to pass upon the applicability of section 3176, and to this we think our opinion should be limited. There are a number of reasons why section 3176 can have no applicability which might not obtain with reference to some other section of the general law.

(154 Fed. 1003.)

FLICKENGER WHEEL CO. v. WAGNER. (Circuit Court of Appeals, Sixth Circuit. August 3, 1907.) No. 1,594. Appeal from the District Court of the United States for the Northern District of Ohio. L. E. Powell, for appellant. L. C. Barker, W. J. Geer, John F. Wilson, Cobb, Howard & Bailey, Van Deman, Burkhart & Smith, and Brown, Burnsides & Ballington, for appellees.

PER CURIAM. Decree of District Court affirmed, with costs. See 145 Fed. 162, 76 C. C. A. 132.

(154 Fed. 1003.)

HOGG v. HOAG et al. HOFFMAN et al. v. HOGG. (Circuit Court of Appeals, Second Circuit. June 20, 1907.) Nos. 238, 239. Appeals from the Circuit Court of the United States for the Southern District of New York. On appeal and cross-appeal from a final decree of the Circuit Court for the Southern District of New York, filed July 25, 1905. The opinion of the Circuit Court is reported in 107 Fed. 807. John De Witt Warner, for Hogg and others. Anderson, Pendleton & Anderson, for Hoffman and others. Charles Bulkley Hubbell (Charles F. Matthewson, of counsel), for appellees William

[1] 83 C. C. A. 349.

Digitized by Google

H. Hoag and others. Huntington & Rheinlander (Francis K. Pendleton and Origen S. Seymour, of counsel), for Hoag. Gould & Wilkie (William B. Goodwin, of counsel), for the receiver. Before TOWNSEND and COXE, Circuit Judges, and HOUGH, District Judge.

PER CURIAM. The record presents an unusual number of perplexing problems, the solution of which is rendered doubly difficult by the fact that the transactions in question occurred 20 years ago; all the principal actors being now dead. The opinion of the circuit judge presents a painstaking and elaborate statement of facts. This statement has been criticised, and some minor errors and discrepancies have been pointed out, but it is unnecessary to attempt to correct them, as, in our judgment, they are all negligible and have no bearing upon the result. After a careful examination of the record and the briefs we are not persuaded that reversible error exists. In the case of Coe we have no doubt whatever of the correctness of the conclusions of the Circuit Court. If all the evidence, documentary and oral, relating to the Coe trust were before us, we feel confident that many of the transactions which now seem inexplicable would be made clear, but, in the absence of such proof, we are not justified in presuming mala fides, especially where, as in the case of Coe, no motive for wrongdoing appears. Regarding the liability of Hogg, as found by the Circuit Court, the testimony leaves us in doubt as to the intent and purpose of the parties in the delivery and acceptance of the certificate 18½. No theory which is advanced regarding it leads to a perfectly consistent and satisfactory conclusion. In such circumstances we are of the opinion that the Circuit Court has adopted the most natural and logical solution of the difficulty by treating Hogg as a subscriber for 270 shares under the trust and as succeeding to the rights and obligations of the defaulting syndicate members. So treated, the transaction is consonant with honesty and fair dealing, which, in the absence of proof to the contrary, must necessarily be inferred. We are unable to find in the record sufficient proof of wrongdoing to justify the inference of the existence of a conspiracy to defraud entered into by men who, apparently, were held in high esteem by their associates in the various efforts to complete the Oregon Pacific Railroad, and who were regarded as men of high character in the community in which they lived. The decree should be affirmed, with costs to the executors of the estate of George S. Coe against the cross-appellants.

TOWNSEND, Circuit Judge, heard the argument and participated in the preliminary consultation.

(154 Fed. 1004.)

THE J. L. LUCKENBACH. (Circuit Court of Appeals, Fourth Circuit. July 9, 1907.) No. 674. Appeal from the District Court of the United States for the Eastern District of Virginia. For opinion below, see 144 Fed. 980. Floyd Hughes and J. L. Jeffries, for appellant. Gordon Paxton, for appellee. Before PRITCHARD, Circuit Judge, and BRAWLEY and McDOWELL, District Judges.

PER CURIAM. We have carefully examined and considered the testimony in the case above stated, and are of opinion that it does not sustain the conclusion of the court below that the steamship "Luckenbach" was at fault. It is therefore ordered and adjudged that the decree below be reversed, and the case remanded to the District Court for the Eastern District of Virginia, with directions to dismiss the libel.

(154 Fed. 1004.)

KING v. SUPREME TENT KNIGHTS OF MACCABEES OF THE WORLD. (Circuit Court of Appeals, Sixth Circuit. August 3, 1907.) No. 1,659. In Error to the Circuit Court of the United States for the Western District of Tennessee. Lehman, Gates & Lehman, for plaintiff in error. F. Zimmerman, for defendant in error.

PER CURIAM. Order dismissing cause on motion of plaintiff in error. See 142 Fed. 678, 73 C. C. A. 668.

Digitized by Google

(154 Fed. 1004.)

KUTTROFF, PICKHARDT & CO. v. UNITED STATES. (Circuit Court of Appeals, Second Circuit. March 5, 1907.) No. 190 (3,651). Appeal from the Circuit Court of the United States for the Southern District of New York. For decision below, see 147 Fed. 758, reversing a decision of the Board of United States General Appraisers. G. A. 5,768 (T. D. 25,523). Curie, Smith & Maxwell (W. Wickham Smith, of counsel), for importers. J. Osgood Nichols, Asst. U. S. Atty. Before WALLACE, LACOMBE, and COXE, Circuit Judges.

PER CURIAM. Decision affirmed. The majority of the court concurring in the opinion below, and Judge LACOMBE concurring in the result because the tariff act was passed after and with full knowledge of long-continued departmental construction classifying this substance as a color or dye.

(154 Fed. 1004.)

REPUBLIC IRON & STEEL CO. v. TAGGART. (Circuit Court of Appeals, Sixth Circuit. August 8, 1907.) No. 1,611. In Error to the Circuit Court of the United States for the Northern District of Ohio. Halbrook & Monsarrat, for plaintiff in error. King & Tracy, Marshall & Fraser, and George D. Welles, for defendant in error.

PER CURIAM. Judgment of the District Court affirmed. See 141 Fed. 910, 73 C. C. A. 144.

(154 Fed. 1005.)

UNITED STATES v. CRUCIBLE STEEL CO. (Circuit Court of Appeals, Second Circuit. April 12, 1907.) No. 184 (4,150). Appeal from the Circuit Court of the United States for the Southern District of New York. For decision below, see 147 Fed. 537, affirming a decision of the Board of United States General Appraisers. G. A. 6,213 (T. D. 26,870). J. Osgood Nichols, Asst. U. S. Atty. William J. Gibson, for importers. Before WALLACE and COXE, Circuit Judges.

PER CURIAM. Decree affirmed.

(154 Fed. 1005.)

UNITED STATES v. TREFOUSSE, GOGUENHEIM & CO. UNITED STATES v. PASSAVANT & CO. (Circuit Court of Appeals, Second Circuit. January 8, 1907.) Nos. 137, 136 (4,128, 4,129). Appeals from the Circuit Court of the United States for the Southern District of New York. For decision below, see 144 Fed. 708, reversing a decision of the Board of United States General Appraisers. J. Osgood Nichols, Asst. U. S. Atty. Frederick W. Brooks, for importers. Before WALLACE, LACOMBE, and TOWNSEND, Circuit Judges.

PER CURIAM. Decrees affirmed in open court.

(154 Fed. 1005.)

WEST CHICAGO R. CO. et al. v. CHICAGO CONSOLIDATED TRACTION CO. et al. (Circuit Court of Appeals, Seventh Circuit. July 30, 1907.) No. 1,368. Appeal from the Circuit Court of the United States for the Eastern Division of the Northern District of Illinois. Henry S. Robbins, for appellants. Nathaniel C. Sears, Albert J. Hopkins, and Clarence A. Knight, for appellees.

PER CURIAM. Appeal dismissed. See 150 Fed. 612.

(154 Fed. 1006.)

WESTINGHOUSE ELECTRIC & MFG. CO. v. MONTGOMERY ELECTRIC LIGHT & POWER CO. (Circuit Court of Appeals, Second Circuit.

Digitized by Google

June 7, 1907.) No. 268. Appeal from the Circuit Court of the United States for the Northern District of New York. Before WALLACE and TOWNSEND, Circuit Judges, and HOLT, District Judge.

HOLT, District Judge. The resignation of Judge WALLACE and the death of Judge TOWNSEND having left me the only member of the court which heard this appeal, I think that I have no power to render any decision or make any order upon the application for a rehearing. I therefore decline to act upon such application for want of power.

END OF CASES IN VOL. 83.

Digitized by Google

INDEX.

ABANDONMENT.

Of barge in tow, see "Towage."

ABATEMENT AND REVIVAL.

§ 1. **Another action pending.**
A proceeding for a writ of assistance in a state court, following a sale and conveyance of land under a decree of foreclosure entered by such court, does not operate as a bar, either temporarily or permanently, to an action of ejectment between the same parties for the same property, brought by the applicant for the writ in a federal court.
—Lamar v. Spalding, 154 Fed. 27.....83 C. C. A. 111

ABETTORS.

Criminal responsibility, see "Criminal Law," § 1.

ABUTTING OWNERS.

Compensation for taking of or injury to lands or easements for public use, see "Eminent Domain," § 1.

ACCESSION.

Intermixture of goods of same kind, see "Confusion of Goods."

ACCESSORIES.

Criminal responsibility, see "Criminal Law," § 1.

ACCIDENT.

Cause of death, see "Death," § 1.

ACCIDENT INSURANCE.

See "Insurance," §§ 6, 8.

ACCOMPLICES.

Criminal responsibility, see "Criminal Law," § 1.

Digitized by Google

ACCOUNT.

Accounting by infringer of patent, see "Patents," § 5.

ACTION.

Abatement, see "Abatement and Revival."
Jurisdiction of courts, see "Courts."
Pendency of action, see "Abatement and Revival," § 1.

Actions between parties in particular relations.

See "Master and Servant," § 2.

Actions by or against particular classes of persons.

See "Carriers," § 1; "Municipal Corporations," § 2.
Corporate officers, see "Corporations," § 3.
Trustee in bankruptcy, see "Bankruptcy," § 3.

Particular causes or grounds of action.

See "Death," § 1; "Insurance," § 8; "Libel and Slander," § 2; "Negligence," § 1.
Breach of contract, see "Contracts," § 5.
Breach of warranty, see "Sales," § 2.
Death of passenger, see "Carriers," § 1.
Death of servant, see "Master and Servant," § 2.
Hire of dredge, see "Shipping," § 2.
Infringement of patent, see "Patents," § 5.
Personal injuries, see "Carriers," § 1; "Master and Servant," § 2; "Municipal Corporations," § 2; "Railroads," § 2.
Recovery of land sold by vendor, see "Vendor and Purchaser," § 1.
Unpaid duties, see "Customs Duties," § 4.

Particular forms of action.

See "Replevin"; "Trover and Conversion."

Particular forms of special relief.

See "Injunction"; "Specific Performance."
Enforcement of liability against corporate officers, see "Corporations," § 3.
Foreclosure of vendor's lien, see "Vendor and Purchaser," § 1.

Particular proceedings in actions.

See "Appearance"; "Damages"; "Evidence"; "Judgment"; "Judicial Sales"; "Jury"; "Parties"; "Pleading"; "Removal of Causes"; "Trial"; "Venue."
Verdict, see "Trial," § 2.

Particular remedies in or incident to actions.

See "Injunction"; "Receivers."

Proceedings in exercise of special or limited jurisdictions.

Criminal prosecutions, see "Criminal Law."
Suits in admiralty, see "Admiralty"; "Shipping," § 5.
Suits in equity, see "Equity."

Review of proceedings.

See "Appeal and Error"; "Judgment," § 1.

Digitized by Google

§ 1. **Joinder, splitting, consolidation, and severance.**
An assignee of a part of a credit or of a chose in action cannot, without the consent of the obligor, maintain an action at law upon it.
But such a part owner may maintain a suit in equity upon his claim, upon condition that he makes the owners of the other portions of the claim parties to the suit.
—Rogers v. Penobscot Min. Co., 154 Fed. 606.....83 C. C. A. 380

And the assignee of a part of the interest of a cestui que trust in real or personal property without the consent of the assignor may maintain such a suit to enforce the execution of the trust.
—Rogers v. Penobscot Min. Co., 154 Fed. 606.....83 C. C. A. 380

ACT OF BANKRUPTCY.

See "Bankruptcy," § 2.

ADEQUATE REMEDY AT LAW.

Effect on jurisdiction of equity, see "Equity," § 1.

ADJUDICATION.

Of courts in general, see "Courts," § 2.
Operation and effect of former adjudication, see "Judgment," § 2.

ADMINISTRATION.

Of estate of bankrupt, see "Bankruptcy," § 3.

ADMIRALTY.

See "Collision"; "Seamen"; "Shipping"; "Towage."

§ 1. **Jurisdiction.**
A corporation organized to conduct a boys' school on shipboard, chartered a vessel for the purpose, and also entered into contracts with libelants, by which it engaged to take pupils for the school year, who were to be received on board and taught the ordinary studies of a preparatory course. During the year, the ship was to make a voyage to foreign countries, and the pupils were to be organized into a cadet corps and given instruction in nautical and naval matters. *Held*, that such contracts were not maritime, and that their breach by the corporation did not give libelants a lien on the vessel enforceable in admiralty.
—The Pennsylvania, 154 Fed. 9.....83 C. C. A. 139

Contracts of a mixed nature are not cognizable in the admiralty courts, and, where the principal subject-matter of a controversy belongs to the jurisdiction of a court of common law or of equity, the incidental matters must also be relegated to the appropriate jurisdiction, although of themselves they might be cognizable in admiralty.
—The Pennsylvania, 154 Fed. 9.....83 C. C. A. 139

§ 2. **Appeal.**
Where, upon a proper construction of a dredge charter, it did not cover the dredging of material not ordinarily found in such dredging operations, and for which a dredge of that construction was not adapted, the charterer, in a libel for the hire of the dredge, was not prejudiced by the admis-

Digitized by Google

sion of representations made by one of its officers as to the character of the material which was to be dredged.
—Bowers Hydraulic Dredging Co. v. Federal Contracting Co., 153 Fed. 870.....83 C. C. A. 52

§ 3. Costs.
A marshal who has taken possession of a vessel on a process from a court of admiralty is responsible for her safe keeping to all parties in interest, and, if he dispenses with a caretaker at the request of one party, it is within his discretion to again take possession and incur the expense of a keeper as authorized by Rev. St. § 829 [U. S. Comp. St. 1901, p. 636].
—The Robert R. Kirkland, 153 Fed. 863.....83 C. C. A. 45

A court of admiralty has no power to allow costs other than those provided for by statute, unless for an expense incurred under its order, and, there being no statutory provision for the allowance of mileage to a proctor in attending on the taking of depositions, no such allowance can be taxed as costs.
—Pacific Mail S. S. Co. v. Iverson, 154 Fed. 450.....83 C. C. A. 306

AFFIDAVITS.

Particular proceedings or purposes.

Appraisal of merchandise subject to duty, see "Customs Duties," § 3.
Verification of claim against municipal corporation, see "Municipal Corporations," § 2.
Verification of pleading, see "Pleading," § 1.

AFFREIGHTMENT.

Contracts, see "Shipping," § 4.

AGENCY.

See "Principal and Agent."

AGREEMENT.

See "Contracts."

AIDERS AND ABETTORS.

Criminal responsibility, see "Criminal Law," § 1.

ALASKA.

Criminal jurisdiction of United States court in, see "Criminal Law," § 2.

ALIENS.

See "Indians."
Right to maintain action for wrongful death, see "Death," § 1.

§ 1. Exclusion or expulsion.
Evidence considered, and *held* sufficient to entitle a Chinese person arrested for being unlawfully within the United States to his discharge on the ground that he was a citizen of the United States by birth; there being direct testimony of apparently credible witnesses to such fact, and no evidence to the contrary, except a statement made by defendant to the in-

Digitized by Google

spectors who arrested him, which, although somewhat inconsistent with such claim, was not irreconcilable therewith.
—Pang Sho Yin v. United States, 154 Fed. 660.....83 C. C. A. 484.

AMENDMENT.

At trial, see "Trial," § 3.

AMOUNT IN CONTROVERSY.

Jurisdictional amount, see "Courts," § 3.

APPEAL AND ERROR.

Review in criminal prosecutions, see "Criminal Law," § 6.
Review in habeas corpus proceedings, see "Habeas Corpus," § 1.
Review of proceedings in admiralty, see "Admiralty," § 2.

§ 1. Decisions reviewable.

The rule applied that an order of a Circuit Court, adjudging the defendant in a suit for infringement of a patent in contempt for violation of an injunction granted therein, and imposing a fine for the benefit of the complainant, is civil in its nature, and constitutes a part of the proceedings in the case, and, where entered after final decree, is appealable to the Circuit Court of Appeals.
—Wilson v. Calculagraph Co., 153 Fed. 961.....83 C. C. A. 77

A decision which completely determines the rights of parties in the pending proceeding, who are not jointly liable with others, is a final decision, reviewable by appeal or writ of error under the acts of Congress.
—Morrison v. Burnette, 154 Fed. 617.....83 C. C. A. 391

An order which avoids a confirmation of a sale and an approval of a lease of an allotment of an Indian minor is a final decision, because it completely determines the right of the purchaser thereunder.
—Morrison v. Burnette, 154 Fed. 617.....83 C. C. A. 391

An order made by a district court of Alaska setting aside a prior judgment of such court and granting a new trial is not appealable under Alaska Codes, pt. 4, c. 51, § 504, which gives the right of appeal from a "final judgment or order," but such order may be reviewed on appeal by the Circuit Court of Appeals for want of jurisdiction in the court to make it.
—Nelson v. Meehan, 155 Fed. 1.....83 C. C. A. 597

§ 2. Right of review.

Parties who have secured all the relief they seek cannot appeal or sue out a writ of error, nor can they, by assigning or arguing cross-errors, confer jurisdiction on a national appellate court to consider or determine alleged erroneous rulings not otherwise presented. Guarantee Co. v. Phenix Ins. Co., 29 C. C. A. 376, 379, 124 Fed. 170, 173.
—Rogers v. Penobscot Min. Co., 154 Fed. 606.....83 C. C. A. 380

§ 3. Presentation and reservation in lower court of grounds of review.

In actions at law the function of the Circuit Court of Appeals is exclusively the correction of errors below, and questions which were not presented to nor decided by the trial court are not open for review.
—City of Pittsburgh v. Jonathan Clark & Sons Co., 154 Fed. 464.... 83 C. C. A. 262

A motion for a directed verdict at the close of all the evidence is waived, where a direct ruling thereon is not insisted on and no exception is reserved.
—Fidelity & Casualty Co. of New York v. Thompson, 154 Fed. 484... 83 C. C. A. 324

Digitized by Google

An appellate court will notice without objection lack of jurisdiction of an inferior court.

—Morrison v. Burnette, 154 Fed. 617.....83 C. C. A. 391

§ 4. Requisites and proceedings for transfer of cause.

The six months allowed by statute for suing out a writ of error for the review of a judgment by the Circuit Court of Appeals cannot be extended by a motion in the trial court to vacate the judgment, filed after such time has expired, which brings nothing new into the record, but is in effect merely a motion to reargue the question whether the judgment was warranted by the record.

—United States v. Fidelity & Deposit Co. of Maryland, 155 Fed. 117.....83 C. C. A. 577

§ 5. Record and proceedings not in record.

A bill of exceptions has no function and is unnecessary in an equity proceeding in the absence of a trial of some issue by a jury, because the appeal brings the entire record, including the evidence, objections, and exceptions, to the appellate court.

—Morrison v. Burnette, 154 Fed. 617.....83 C. C. A. 391

Legal issues other than the one specifically presented for determination may properly be considered and determined by an appellate court, where they naturally arise and are pertinent to the question at issue and to further proceedings in the trial court.

—Collin County Nat. Bank of McKinney, Tex., v. Hughes, 155 Fed. 389.....83 C. C. A. 661

§ 6. Assignment of errors.

Held, that the ordinary rules in reference to the limitation after mandate, of the powers of a court appealed from do not apply here, because no proposition with reference to them was made in the court appealed from; and consequently the Circuit Court of Appeals declined to revise a proceeding in the Circuit Court with reference to the violation of an interlocutory injunction, which proceeding occurred after the reception of the mandate dismissing the suit.

—Wilson v. Calculagraph Co., 153 Fed. 961.....83 C. C. A. 77

The purpose of the provision of rule 11 of the Circuit Courts of Appeals (150 Fed. xxvii, 118 C. C. A. xxvii), that "the court at its option may notice a plain error not assigned," is to prevent the miscarriage of justice from oversight, and it does not intend that the court is to sift the record and deal with questions of small importance, but only that it may notice errors which are obvious and of a controlling character.

—P. P. Mast & Co. v. Superior Drill Co., 154 Fed. 45...83 C. C. A. 157

General assignments of error that the court erred in sustaining the report of a master, or in overruling the exceptions thereto, which were numerous, or in awarding any substantial damages thereon, do not comply with the requirement of rule 11 of the Circuit Courts of Appeals (150 Fed. xxvii, 118 C. C. A. xxvii), that such assignments "shall set out separately and particularly each error asserted and intended to be urged," and will not be considered.

—P. P. Mast & Co. v. Superior Drill Co., 154 Fed. 45...83 C. C. A. 157

Under rule 11 of the Circuit Courts of Appeals (150 Fed. xxvii, 18 C. C. A. xxvii), which requires an assignment of errors to be filed with the clerk of the court below with the petition for an appeal, and provides that no appeal shall be allowed until such assignment of errors shall have been filed, additional assignments of error filed after an appeal has been perfected by the service of citation, by which the court below lost jurisdiction, constitute no part of the record, and will not be considered on the appeal.

—P. P. Mast & Co. v. Superior Drill Co., 154 Fed. 45...83 C. C. A. 157

Digitized by Google

Where there was no request in the trial court for the allowance of nominal damages by a plaintiff and no assignment of error because of the failure to do so, the judgment will not be reversed because of such failure.
—Peck v. Tribune Co., 154 Fed. 330.....83 C. C. A. 202

A defect of jurisdiction of the trial court, such as want of diversity of citizenship, which cannot be waived, and which discloses the total absence of power in that court to take any affirmative action in the suit, will be noticed by the appellate court sua sponte, without exception or specification of error. But objections to the jurisdiction of the trial court, such as lack of proper service of a lawful summons, which condition the method of the exercise of the power of the court and which may be waived, must be presented to the appellate court by a proper assignment of errors, which gives the opposing party an opportunity to prepare a proper record for their consideration.
—Rogers v. Penobscot Min. Co., 154 Fed. 606.....83 C. C. A. 380

An appellate court will notice without assignment the lack of jurisdiction of an inferior court.
—Morrison v. Burnette, 154 Fed. 617.....83 C. C. A. 391

But alleged errors in the exercise of its jurisdiction can be presented only by appeal or writ of error and a proper assignment of errors.
—Morrison v. Burnette, 154 Fed. 617.....83 C. C. A. 391

§ 7. Briefs.

Under Circuit Court of Appeals rule 24 (150 Fed. li), declaring that the brief for the plaintiff in error shall contain a specification of the errors relied on, and shall set out separately and particularly each error asserted and intended to be urged, an objection that a false or misleading issue had been tried to the prejudice of plaintiff in error could not be reviewed, where no such error was so assigned.
—Ætna Indemnity Co. v. J. R. Crowe Coal & Mining Co., 154 Fed. 545.....83 C. C. A. 431

§ 8. Review.

The direction of a verdict by a federal court, even if erroneous, is harmless error and not ground for reversal where, pending proceedings for review, a final judgment has been rendered in another proceeding between the same parties in a state court which conclusively determines the question at issue in favor of the party for whom the verdict was directed.
—Lamar v. Spalding, 154 Fed. 27.....83 C. C. A. 111

Although an appeal is from an interlocutory order granting or continuing in force an injunction, if the appellate court is of opinion that relief cannot be granted and that on the final hearing the bill must be dismissed, it is its duty to save both parties the expense of further litigation by making a final disposition of the case.
—Arkansas Southeastern R. Co. v. Union Sawmill Co., 154 Fed. 304.....83 C. C. A. 224

The discretion of a court in granting or refusing a preliminary injunction, where the evidence is conflicting and the rights of the parties cannot properly be determined except on final hearing, is not subject to review by an appellate court unless there has been a plain disregard of facts or of settled principles of equity.
—Bush v. Pioneer Min. Co., 154 Fed. 480.....83 C. C. A. 320

The denial of a motion for a new trial in a federal court is an exercise of discretion which is not reviewable by the Circuit Court of Appeals.
—Fidelity & Casualty Co. of New York v. Thompson, 154 Fed. 484... 83 C. C. A. 324

Where a trial court has jurisdiction to grant or refuse a new trial, its order granting or refusing it is discretionary, and it is not reviewable in a national appellate court.
—Chicago, M. & St. P. Ry. Co. v. Heil, 154 Fed. 626....83 C. C. A. 400

Digitized by Google

Where, in an action on a fidelity bond, the verdict returned was in strict accord with the proof touching the amount of the employé's embezzlement, and under no theory was defendant entitled to a credit which the jury disallowed, defendant was not entitled to a reversal because the disallowance of such credit was contrary to an ambiguous instruction with reference thereto.

—Ætna Indemnity Co. v. J. R. Crowe Coal & Mining Co., 154 Fed. 545.....83 C. C. A. 431

Where a judgment was for the right party and in the interest of substantial justice, it will not be reversed on a writ of error because the court proceeded on an erroneous theory.

—Ætna Indemnity Co. v. J. R. Crowe Coal & Mining Co., 154 Fed. 545.....83 C. C. A. 431

Where, in an action on a fidelity bond, the court gave an instruction with reference to the allowance of a credit in favor of defendant, whether the verdict contravened such instruction was reviewable on a writ of error.

—Ætna Indemnity Co. v. J. R. Crowe Coal & Mining Co., 154 Fed. 545.....83 C. C. A. 431

Where the trial of an alleged false issue was induced by defendant's own procurement, over plaintiff's objection, defendant could not object thereto on a writ of error.

—Ætna Indemnity Co. v. J. R. Crowe Coal & Mining Co., 154 Fed. 545.....83 C. C. A. 431

Where the record on a writ of error does not clearly show that the jury's finding was contrary to the instructions of the court when taken as a whole, it will be presumed that the jury followed the instructions, and that the verdict is right.

—Ætna Indemnity Co. v. J. R. Crowe Coal & Mining Co., 154 Fed. 545.....83 C. C. A. 431

Where a verdict returned in the federal court has been allowed to stand by the trial judge, it cannot be set aside on appeal as excessive.

—Ætna Indemnity Co. v. J. R. Crowe Coal & Mining Co., 154 Fed. 545.....83 C. C. A. 431

Where, on a prior appeal, the question of the validity of certain bonds issued by the bankrupt corporation and of the claim made thereon was presented and determined, the bankrupt's trustee was not entitled to contest questions relating to interest on such bonds on a subsequent appeal.

—In re Waterloo Organ Co., 154 Fed. 657.....83 C. C. A. 481

The erroneous admission of the opinions of witnesses as to the cause of an explosion *held* without prejudice, where the material facts were not in dispute, and the opinions were merely arguments therefrom.

—Castner Electrolytic Alkali Co. v. Davies, 154 Fed. 938..... 83 C. C. A. 510

Reversal of the lower court's judgment as to the facts will only be made when such judgment is shown to be against the clear preponderating weight of all the evidence.

—Vera Cruz & P. R. Co. v. Waddell, 155 Fed. 401.....83 C. C. A. 673

Where the whole testimony has not been incorporated in the record, it will be presumed that such testimony preponderates in favor of and sustains the judgment of the trial court.

—Vera Cruz & P. R. Co. v. Waddell, 155 Fed. 401.....83 C. C. A. 673

Where findings of fact are specifically made and filed by the trial court sitting without the intervention of a jury, and no exceptions are taken to such findings, no other or additional findings are asked, and the testimony in full is not incorporated in the record, such findings will be taken as true, and the appellate court in passing upon the case will only

Digitized by Google

reverse in case it finds the judgment rendered to be contrary to the facts so found and set forth by the trial court.
—Vera Cruz & P. R. Co. v. Waddell, 155 Fed. 401.....83 C. C. A. 673

It matters little whether a court trying a case without the intervention of a jury formally excludes evidence which it has necessarily had to hear in order to determine its relevancy at the time when offered, or at the end, when it considers the whole with a view of maturing its judgment, for the fact that it remains in the record does not necessarily imply that it was improperly considered in making the final decision.
—Vera Cruz & P. R. Co. v. Waddell, 155 Fed. 401.....83 C. C. A. 673

APPEARANCE.

Under the statutes of Nebraska, which abolish the common-law writ of error, and provide for proceedings in the Supreme Court to review a judgment of a district court by the filing of a petition in error and the issuance and service of a summons thereon, such proceedings are in effect an original action, and a foreign administrator who avails himself of the right given him by the statutes of the state to sue in its courts by instituting such a proceeding in error to review a judgment of a district court subjecting lands of his intestate to an attachment voluntarily submits the question of the validity of such judgment to the Supreme Court of the state, and its decision is binding upon him and upon the property.
—Benker v. Meyer, 154 Fed. 290.....83 C. C. A. 270

An application by a defendant not served to remove a cause from the state to a federal court is not an appearance to the merits.
—Northwestern State Bank of Hay Springs, Neb., v. Silberman, 154 Fed. 809.....83 C. C. A. 525

APPLIANCES.

Liability of employer for defects, see "Master and Servant," § 1.

APPRAISAL.

Of merchandise subject to duty, see "Customs Duties," § 3.

APPROVAL.

Of lease of Indian allotment, see "Indians."

ARGUMENT OF COUNSEL.

In criminal prosecutions, see "Criminal Law," § 4.

ARREST OF JUDGMENT.

In criminal prosecutions, see "Criminal Law," § 5.

ASSAULT AND BATTERY.

§ 1. **Criminal responsibility.**
On the trial of a defendant for assault with a dangerous weapon, where it was shown that he went upon a mining claim in the peaceable posses-

Digitized by Google

sion of a lessee, and, on being ordered off, threatened such lessee with a revolver, evidence offered to show that a third person owned an interest in the claim, and that such ownership had been recognized by the lessee, who had acknowledged the right of such person to have a representative on the claim, was properly excluded as having no tendency in any event to justify the assault or to establish a defense, especially where defendant made no claim to represent such person, who already had a representative on the claim with the lessee's consent.
—Johnston v. United States, 154 Fed. 445.....83 C. C. A. 299

The charge of the court in a prosecution for assault with a dangerous weapon considered, and, taken as a whole, *held* free from error.
—Johnston v. United States, 154 Fed. 445.....83 C. C. A. 299

ASSIGNMENT OF ERRORS.

See "Appeal and Error," § 6.
Cross-errors in United States courts, see "Courts," § 3.

ASSIGNMENTS.

As splitting cause of action, see "Action," § 1.
Fraud as to creditors, see "Fraudulent Conveyances."
In bankruptcy, see "Bankruptcy," § 3.
Of copyright, see "Copyrights," § 1.

ASSIGNMENTS FOR BENEFIT OF CREDITORS.

See "Bankruptcy."

ASSISTANCE, WRIT OF.

Pendency of proceeding for as ground for abatement of other action, see "Abatement and Revival," § 1.

ASSUMPTION.

Of risk by employé, see "Master and Servant," §§ 1, 2.

ATTACHMENT.

Conclusiveness of judgment in, see "Judgment," § 2.
Effect of proceedings in bankruptcy, see "Bankruptcy," § 3.

ATTORNEY AND CLIENT.

Allowance to trustee in bankruptcy for attorney's fees, see "Bankruptcy," § 3.
Argument and conduct of counsel at trial in criminal prosecutions, see "Criminal Law," § 4.
Attorneys in fact, see "Principal and Agent."
Attorney's lien in bankruptcy proceedings, see "Bankruptcy," § 2.
Enforcement of attorney's lien in United States court, see "Courts," § 3.

Digitized by Google

§ 1. **Compensation and lien of attorney.**
In the absence of a statutory provision, an attorney has no lien on his client's naked cause of action; his right being limited to the fruits of the litigation.
—In re Baxter & Co., 154 Fed. 22.....83 C. C. A. 106

A client may settle a controversy with the opposite party against the consent of his attorney either before or after action brought, unless the settlement is made for the purpose of depriving the attorney of his claim.
—In re Baxter & Co., 154 Fed. 22.....83 C. C. A. 106

Under Code Civ. Proc. N. Y. § 66, as amended in 1879, which gives an attorney a lien upon the cause of action of his client, which attaches "to the proceeds thereof in whosesoever hands they may come," and which may be enforced by a suit in equity against the client or any party holding the proceeds, the attorneys for a stockholder in suits brought on behalf of all the stockholders against certain directors of a corporation to compel them to account for and pay over to the corporation the amount of illegal dividends declared and paid by them from the capital, as a result of which defendants paid over a large sum to the corporation, are entitled to a lien on such fund for their services, and may enforce the same by a suit in equity against the corporation.
—Meighan v. American Grass Twine Co., 154 Fed. 346..83 C. C. A. 124

BANKRUPTCY.

Conditional sale to bankrupt as distinguished from chattel mortgage, see "Chattel Mortgages," § 1.

§ 1. **Constitutional and statutory provisions.**
Act Pa. July 12, 1842 (P. L. 339), which authorizes the arrest and imprisonment of a judgment debtor on a showing that he is about to remove or has concealed property with intent to defraud his creditors, is not an insolvency law of the state, although it provides that the debtor may be released on his giving a bond that he will apply within 30 days for the benefit of such law and comply with its requirements, but merely provides a remedy in aid of execution, and its operation is not suspended by the national bankruptcy act.
—Ex parte Crawford, 154 Fed. 769.....83 C. C. A. 474

§ 2. **Petition, adjudication, warrant, and custody of property.**
Pending bankruptcy proceedings against a corporation all its claims, except those amounting to about $50,000, were settled, and an application made to dismiss the proceedings, which was denied, with leave to renew, and an order made directing the corporation to deposit $50,000 to stand as security for disputed claims, cost of bankruptcy proceedings, attorney's liens, or equitable assignments, etc. *Held*, that the attorney for the petitioning creditors was entitled to a lien which extended to all the demands of creditors who were settled with after the attorney's formal appearance in the proceeding in their behalf, under N. Y. Code Civ. Proc. § 66, creating an attorney's lien on his client's cause of action, claim, or counterclaim, and the proceeds thereof, in whosesoever hand they may come, not affected by any settlement between the parties before or after judgment or final order.
—In re Baxter & Co., 154 Fed. 22.....83 C. C. A. 106

Where an order was made in bankruptcy proceedings pending a motion to dismiss the proceedings before adjudication directing the bankrupt to deposit $50,000 to stand as security for the payment of all disputed claims, the cost of the proceedings and all attorney's liens or equitable assignments, etc., such order protected any lien which the attorney for the petitioning creditors might have for his services.
—In re Baxter & Co., 154 Fed. 22.....83 C. C. A. 106

Digitized by Google

Bankr. Act July 1, 1898, c. 541, § 19a, 30 Stat. 551 [U. S. Comp. St. 1901, p. 3429], does not entitle an alleged bankrupt to a jury trial where by his answer he admits his insolvency and the commission of the alleged acts of bankruptcy but alleges that he is not amenable to bankruptcy proceedings because chiefly engaged in farming.

—Stephens v. Merchants' Nat. Bank of Aurora, Ill., 154 Fed. 341.... 83 C. C. A. 119

An allegation that defendant corporation committed an act of bankruptcy by permitting and confessing judgment to K., for the use of G., which judgment was entered, etc., and on which execution attachment was issued and a fi. fa. issued, and the goods of the defendant levied on by the sheriff, was insufficient.

—Pittsburgh Laundry Supply Co. v. Imperial Laundry Co., 154 Fed. 662.....83 C. C. A. 486

Bankr. Act July 1, 1898, c. 541, § 3a, subd. 3, 30 Stat. 546 [U. S. Comp. St. 1901, p. 3422], makes it an act of bankruptcy for a person while insolvent to have suffered or permitted any creditor to obtain a preference by legal proceedings, and not to have vacated or discharged the same at least five days before a sale or final disposition of any property affected thereby; and section 31 declares that, whenever time is enumerated by days in the act, the number of days shall be computed by excluding the first and including the last. *Held* that, where property of a bankrupt was advertised for sale under an execution on August 22, 1906, the bankrupt had the entire day of the 17th in which to vacate or discharge the execution, before it would be guilty of an act of bankruptcy.

—Pittsburgh Laundry Supply Co. v. Imperial Laundry Co., 154 Fed. 662.....83 C. C. A. 486

A business concern, being in financial difficulties, executed an instrument reciting that, whereas they were indebted to various parties whose claims were due, and that they were unable to pay the same in the regular and ordinary course of business, they thereby sold and set over to M. in trust all their general stock of merchandise, book accounts, and matters receivable, amounting, etc., conditioned that M. would dispose of and sell the same according to his judgment at retail or public sale, and collect all the accounts, and with the proceeds pay pro rata all their creditors, a list of whom was attached, with the amounts due each, and to return any surplus to the grantors on demand. *Held*, that such instrument was not a mortgage, but a general assignment for the benefit of creditors, and therefore constituted an act of bankruptcy.

—In re Thomlinson Co., 154 Fed. 834.....83 C. C. A. 550

§ 3. Assignment, administration, and distribution of bankrupt's estate.

Where intervener surrendered possession of property received from the bankrupts which was to be the subject of litigation, on the faith of a stipulation between the intervener and the bankrupt's receiver, approved by the referee, that intervener should lose no rights thereby, the bankrupt's trustee should not be permitted to repudiate the stipulation, though the receiver and referee may have acted improvidently in entering into it.

—In re E. M. Newton & Co., 153 Fed. 841; Swofford Bros. Dry Goods Co. v. Bryant, Id.....83 C. C. A. 23

Where intervener in bankruptcy proceedings claimed certain property delivered to it just prior to the institution of the proceedings, whether the contract under which intervener claimed was a conditional sale or a chattel mortgage, whether it was valid as between the parties, and the effect of intervener's failure to record it were questions which were determinable exclusively by the local law.

—In re E. M. Newton & Co., 153 Fed. 841; Swofford Bros. Dry Goods Co. v. Bryant, Id.....83 C. C. A. 23

Digitized by Google

The bankrupts' trustees acquire no greater right to property which has been in the bankrupts' possession than the bankrupts themselves had.
—In re E. M. Newton & Co., 153 Fed. 841; Swofford Bros. Dry Goods Co. v. Bryant, Id.....83 C. C. A. 23

Bankr. Act July 1, 1898, c. 541, § 70e, 30 Stat. 565 [U. S. Comp. St. 1901, p. 3452], as amended in 1903 (Act Feb. 5, 1903, c. 487, § 8, 32 Stat. 800 [U. S. Comp. St. Supp. 1905, p. 690]), does not confer on a court of bankruptcy jurisdiction of a suit brought by a trustee thereunder to avoid a transfer made by a bankrupt, unless by consent of the defendant, which is made a condition to such jurisdiction in all suits by trustees by amended section 23b with the exceptions expressly mentioned therein.
—Hull v. Burr, 153 Fed. 945.....83 C. C. A. 61

Courts of bankruptcy have no jurisdiction except that conferred by statute; and Bankr. Act July 1, 1898, c. 541, 30 Stat. 544 [U. S. Comp. St. 1901, p. 3418], neither expressly nor impliedly provides for summary proceedings, or for auxiliary or ancillary proceedings, in another court of bankruptcy, in aid of the bankruptcy court which made the adjudication and has charge of the bankrupt's estate.
—Hull v. Burr, 153 Fed. 945.....83 C. C. A. 61

A District Court of the United States is without jurisdiction of a suit by a trustee in bankruptcy appointed in another district to recover property from one to whom it was conveyed by the bankrupt more than four months prior to the bankruptcy, and who took possession of it after the bankruptcy; the ground of recovery alleged being that the conveyance was in fact a mortgage, unless the defendant consents to such jurisdiction. Such an action is not one of which the District Court as a court of bankruptcy is given jurisdiction without such consent, by Bankr. Act July 1, 1898, c. 541, § 23b, or section 70e, 30 Stat. 552, 565 [U. S. Comp. St. 1901, pp. 3431, 3452], as amended in 1903 (Act Feb. 5, 1903, c. 487, §§ 8, 16, 32 Stat. 798, 800 [U. S. Comp. St. Supp. 1905, pp. 686, 690]).
—Hull v. Burr, 153 Fed. 945.....83 C. C. A. 61

A trustee in bankruptcy is vested by the act of 1898 with all the rights and title of the bankrupt and of his creditors, and, when he seeks to enforce rights or to recover property in a district other than that of the court which appointed him, he stands in the position of those whose rights he has acquired, and can resort only to the same courts, state or federal, and is confined to the same remedies, subject to the exceptions made by Act July 1, 1898, c. 541, §§ 23b, 70e, 30 Stat. 552, 565 [U. S. Comp. St. 1901, pp. 3431, 3452], as amended in 1903 (Act Feb. 5, 1903, c. 487, §§ 8, 16, 32 Stat. 798, 800 [U. S. Comp. St. Supp. 1905, pp. 686, 690]).
—Hull v. Burr, 153 Fed. 945.....83 C. C. A. 61

The president of a bankrupt corporation, being the Eastern agent of defendant corporation, with knowledge of the bankrupt's insolvency on several occasions, misapplied funds belonging to defendant to the use of the bankrupt without defendant's knowledge or consent, and then, when the bankrupt's failure could no longer be suspended, he sold certain of the bankrupt's assets, and with the proceeds repaid defendant the money misappropriated, also without defendant's knowledge. *Held*, that the repayment of the money so stolen from defendant did not constitute a preference recoverable by the bankrupt's trustee.
—McNaboe v. Columbian Mfg. Co., 153 Fed. 967.....83 C. C. A. 81

Bankr. Act July 1, 1898, c. 541, §§ 67c, 67f, 30 Stat. 564, 565 [U. S. Comp. St. 1901, pp. 3449, 3450], providing that liens obtained through legal proceedings within four months prior to bankruptcy shall be dissolved by the bankruptcy proceedings, relate only to those actions or proceedings taken by creditors who, having no existing lien or right of lien resting in existing contract entered into in good faith, seek to obtain a preference by being first in the race of diligence, and such provisions do not affect a lien obtained by a landlord by the levy of a distress warrant for past due rent under a lease giving the landlord a right of lien and to distrain for rent in

Digitized by Google

arrears, which was entered into in good faith and not in contemplation of bankruptcy; such lien being one which is preserved by section 67d.

—In re Robinson & Smith, 154 Fed. 343; Wilson v. Brock & Rankin, Id.....83 C. C. A. 121

A corporation, on a purchase of property, as part payment of the purchase price assumed payment of a debt secured by mortgage on the property, and which was also secured by a mortgage on other property of the original debtor. The latter mortgage was foreclosed, the property sold, and the proceeds, which was less than the debt, paid to the creditor. The corporation was adjudged a bankrupt, and its property sold clear of liens which were transferred to the proceeds. *Held* that, by its assumption of the mortgage debt, the corporation became the principal debtor and the original debtor its surety, and the creditor was entitled to prove his claim and enforce his lien for the full amount of the debt, without deducting the amount of the proceeds of the other mortgaged property, which on receiving payment in full from the bankrupt's estate he held in trust for the original debtor.

—In re Beaver Knitting Mills, 154 Fed. 320.....83 C. C. A. 240

A chattel mortgage given by a small retail merchant on his stock, containing no after-acquired property clause, cannot be enforced against stock on hand when he was adjudicated a bankrupt nearly a year and a half afterward, without proof that the goods were the same.

—In re Doran, 154 Fed. 467; Moorman v. Beard, Id....83 C. C. A. 265

Under Ky. St. 1903, § 496, which provides that no mortgage shall be valid "against a purchaser for a valuable consideration without notice thereof or against creditors" until lodged for record, as construed by the state Court of Appeals a mortgage is valid against the general creditors of a bankrupt where it was recorded prior to the filing of the petition in bankruptcy, although it was withheld from record for several months, during which time a large part of the indebtedness was contracted.

—In re Doran, 154 Fed. 467; Moorman v. Beard, Id....83 C. C. A. 265

Where a receiver for a bankrupt's estate has, with the assent of the bankruptcy court, vacated premises of which a third party was claiming the right of possession, and such third person has thereupon made peaceable entry thereon, a subsequently appointed trustee of the estate cannot oust the third party and retake possession through a summary proceeding in the court of bankruptcy.

—In re Rothschild, 154 Fed. 194.....83 C. C. A. 288

Where an order by a referee requiring a person to turn over money to a trustee in bankruptcy was within his lawful authority, the District Court has power to commit such person for contempt for refusal to obey such order.

—In re Graessler & Reichwald, 154 Fed. 478; Consani v. Brandon, Id.....83 C. C. A. 304

Where property of bankrupts was taken on a void attachment and the proceeds paid to the plaintiff on a judgment against the bankrupts, recovered by default several weeks after the filing of their petition in bankruptcy, which fact was known to the plaintiff, a referee has authority under Bankr. Act July 1, 1898, § 2 (7), and section 67f, c. 541, 30 Stat. 546, 565 [U. S. Comp. St. 1901, pp. 3421, 3450], to make a summary order requiring such proceeds to be paid over to the trustee.

—In re Graessler & Reichwald, 154 Fed. 478; Consani v. Brandon, Id.....83 C. C. A. 304

A bankrupt corporation, having issued bonds secured by a mortgage, which after bankruptcy was conceded to be valid as to two-fifths of the property, but was contested by the trustee as to the remainder, the mortgagee, having retained possession of the proceeds of the property on foreclosure sale pending determination of the ownership thereof, was chargeable with interest at 3 per cent. on the entire proceeds during its possession.

—In re Waterloo Organ Co., 154 Fed. 657.....83 C. C. A. 481

Digitized by Google

After the bankruptcy of a corporation having issued bonds secured by a mortgage payable to a bank as trustee, it was agreed that the mortgage was valid as to two-fifths of the property, but was contested by the trustee in bankruptcy as to the remainder. The litigation which was brought in a state court was undertaken in good faith and was not frivolous, but was conducted by the bank for the bondholders' benefit. *Held*, that the bank, pending appeal to the state Court of Appeals from an adverse decision, was entitled to an allowance out of the bankrupt's estate for expenses and services of attorneys in such litigation.

—In re Waterloo Organ Co., 154 Fed. 657.....83 C. C. A. 481

Where bonds executed by a bankrupt were deposited with a bank as collateral for past and future indebtedness, the bank was required to elect whether it would make the bonds valid by allowing the notes for which the bonds were collateral to be covered into the bankrupt's estate, or press its claim as a general creditor on the notes, leaving the bonds without consideration; it not being entitled to prove the bonds as a secured claim without surrendering the notes.

—In re Waterloo Organ Co., 154 Fed. 657.....83 C. C. A. 481

Litigation by a bankrupt's trustee brought to reduce the number of claimants to a special fund belonging primarily to mortgage creditors not being frivolous, the trustee was entitled to the allowance of reasonable attorney's fees.

—In re Waterloo Organ Co., 154 Fed. 657.....83 C. C. A. 481

The partners of the bankrupt partnership of F. M. Tucker & Co. were formerly testamentary trustees of the same trust, which the appellant now represents as their successor. While such trustees, they borrowed from the trust, and earmarked certain stocks of their own as collateral securing repayment. F. M. Tucker & Co. failed and had made an assignment under the state law for the benefit of their creditors, and thereafterwards they went through the form of canceling the indebtedness, and of taking the collateral securities as the absolute property of the trust. They still later disposed of a portion of the collateral, leaving a residue, which residue constitutes the assets in controversy here. The trustee in bankruptcy claims, first, that the transaction by which the loan was attempted to be discharged and the collateral securities taken as the absolute property of the testamentary trust was void; and, second, that as F. M. Tucker & Co. disposed of certain of the securities after the attempted cancellation of the indebtedness, and as the securities thus disposed of were more than equal to the indebtedness, the proceeds thereof should be held, as between the present parties, to have discharged the indebtedness. *Held* that, under the circumstances, the transaction which involved the attempted cancellation of the indebtedness was not only void, but that it was void for all purposes; and, further, *held*, that inasmuch, as between the members of the bankrupt copartnership and the testamentary trust, both the status of the indebtedness and of the collateral securities now in controversy remained in law unchanged until the time of the bankruptcy, and inasmuch, also, as the equities remain precisely the same as they would have been between F. M. Tucker & Co. and the testamentary trust if there had been no bankruptcy, the securities in controversy must be administered for the benefit of the testamentary trust.

—Hatch v. Curtin, 154 Fed. 791; In re Tucker, Id.; Ex parte Curtin, Id.....83 C. C. A. 495

A testator by a will made certain devises and bequests to each of his three sons, and left his residuary estate to his wife, "absolutely and without reservation," but expressing his desire that she should make a will, after advising with the sons, to carry out his wishes as far as practicable, confiding in her sense of justice and discretion. He subsequently revoked such will and made another leaving his entire estate to his wife, confiding in her ability and integrity to make "as early as practicable contemplated bequests which she is aware of" to the sons. After his death his wife made her will, by which she divided the greater

Digitized by Google

part of her estate between the sons, share and share alike. Prior to her death a large part of the property was divided between the sons with her consent, each receiving more than was left them by the first will of their father. *Held* that, if the will of the father created a precatory trust, in the absence of any evidence as to what bequests were contemplated except the prior will, such trust had been fulfilled by the mother prior to her death, and that on her death after the bankruptcy of one of the sons the property received by him under her will came from her estate and was not a part of the assets of his estate in bankruptcy.

—In re Harper, 155 Fed. 105.....83 C. C. A. 565

§ 4. Appeal and revision of proceedings.

A finding by a referee, confirmed by the District Court, that an alleged bankrupt was not chiefly engaged in farming, but was amenable to the bankruptcy law, will not be disturbed on appeal where the evidence left the question uncertain on the facts.

—Stephens v. Merchants' Nat. Bank of Aurora, Ill., 154 Fed. 341..... 83 C. C. A. 119

An order of a court of bankruptcy denying priority to a claim which has been allowed against an estate is one made in a controversy arising in a bankruptcy proceeding, and not one made in a bankruptcy proceeding, and is reviewable by the Circuit Court of Appeals on appeal under Bankr. Act July 1, 1898, c. 541, § 25a, 30 Stat. 553 [U. S. Comp. St. 1901, p. 3432].

—In re Doran, 154 Fed. 467; Moorman v. Beard, Id....83 C. C. A. 265

Bankr. Act July 1, 1898, § 24b, c. 541, 30 Stat. 553 [U. S. Comp. St. 1901, p. 3432], giving Circuit Courts of Appeals authority to superintend and revise in matters of law, was intended to provide a summary method of revising the orders of courts of bankruptcy on questions of law, and does not contemplate any review of facts.

—In re Graessler & Reichwald, 154 Fed. 478; Consani v. Brandon, Id.....83 C. C. A. 304

The refusal of a court of bankruptcy to permit the amendment of an involuntary bankruptcy petition, for the purpose of inserting additional alleged acts of bankruptcy, would not be interfered with on appeal, unless abuse of discretion was shown.

—Pittsburgh Laundry Supply Co. v. Imperial Laundry Co., 154 Fed. 662.....83 C. C. A. 486

This appeal relates to the title of certain assets claimed by the trustees in bankruptcy of Frederick M. Tucker & Co. to belong to the bankrupt estate, but which the appellant claims belongs to a testamentary trust. The proceedings were commenced by the trustees in bankruptcy by a petition in the District Court. There the appellant resisted the petition, among other reasons, because, as he claimed, the District Court had no jurisdiction over the controversy. The District Court decided against him, and he thereupon appealed to us. In this court the parties mutually agreed to waive all questions of jurisdiction. *Held*, that the waiver was sufficiently retroactive in its effect to enable us to take jurisdiction of the merits of the case on appeal.

—Hatch v. Curtin, 154 Fed. 791; In re Tucker, Id.; Ex parte Curtin, Id.....83 C. C. A. 495

Under Act Cong. March 3, 1891, c. 517, § 11, 26 Stat. 829 [U. S. Comp. St. 1901, p. 552], providing that no appeal or writ of error by which any order, judgment, or decree may be reviewed in the Circuit Court of Appeals shall be sued out except within six months after the entry of the order, etc., sought to be reviewed, a petition to revise an order entered in bankruptcy proceedings, denying the bankrupt's motion to quash the service of the subpœna, not filed within six months, is ineffectual.

—In re Thomlinson Co., 154 Fed. 834.....83 C. C. A. 550

Digitized by Google

BANKS AND BANKING.

§ 1. National banks.
One who was notified that shares of stock in a national bank had been transferred into his name, although he had in fact no interest therein, and who indorsed the certificates in blank, but took no steps to have the stock transferred to the name of the true owner, cannot avoid liability for an assessment thereon made by the comptroller to meet the debts of the bank after its insolvency.
—Kenyon v. Fowler, 155 Fed. 107.....83 C. C. A. 567

BATTERY.

See "Assault and Battery."

BAWDY HOUSE.

See "Disorderly House."

BEQUESTS.

See "Wills."

BETTING.

See "Gaming."

BIAS.

Of juror, see "Jury," § 1.

BILL OF EXCHANGE.

See "Bills and Notes."

BILL OF LADING.

See "Shipping," § 4.

BILLS AND NOTES.

Validity of note given in gambling transaction, see "Gaming," § 1.

§ 1. Presentment, demand, notice, and protest.
A certificate of deposit dated January 25, 1904, due January 25, 1905, was duly presented for payment. Payment was demanded and refused on January 25, 1905. Thereupon a notice of the presentment, demand, and dishonor was sent to, and received by, the indorser, which was dated January 25, 1904, when it should have been dated January 25, 1905, which stated that the demand and dishonor were on the day of the date of the notice, that the certificate was dated January 25, 1905, when it was dated January 25, 1904, and it omitted to recite this clause which was in the certificate, "No interest after six months." *Held*, the notice sufficiently identified the certificate and notified the indorser of due presentment, demand, and dishonor, so that it is obvious that he could not have been misled or prejudiced by the mistakes in it.
—Derham v. Donohue, 155 Fed. 385.....83 C. C. A. 657

A notice of protest is sufficient which by express terms or by necessary implication informs the indorser of the identity of the paper, of due demand, of its protest, and of its dishonor. Mistakes and omissions in it

Digitized by Google

which obviously could not have misled or prejudiced the indorser are not fatal.
—Derham v. Donohue, 155 Fed. 385.....83 C. C. A. 657

BOARDS.

Of corporate directors, see "Corporations," § 4.
Of general appraisers, see "Customs Duties," §§ 3, 4.

BONDS.

Decision on appeal as law of the case on question of validity of, see "Appeal and Error," § 8.
Importers' bonds, see "Customs Duties," § 3.

BREACH.

Of condition, see "Insurance," §§ 3, 4.
Of contract, see "Contracts," §§ 3, 4.
Of warranty, see "Sales," § 2.

BRIDGES.

Approval of engineers of performance of contract for construction of, see "Contracts," § 4.

BRIEFS.

On appeal or writ of error, see "Appeal and Error," § 7.

BROKERS.

See "Principal and Agent."
Joint adventure in purchase and sale of land, see "Joint Adventures."

BURDEN OF PROOF.

In criminal prosecutions, see "Criminal Law," § 3.

CANCELLATION OF INSTRUMENTS.

Rescission of contracts in general, see "Contracts," § 3.

CARGO.

See "Shipping."

CARRIERS.

Carriage of goods by vessels, see "Shipping," § 4.

§ 1. **Carriage of passengers.**
A sleeping car company which sells accommodations in its cars between points on a railroad to passengers of the railroad company, the cars being hauled by the railroad company in its trains under a contract between the

Digitized by Google

two companies, is not liable to a passenger for breach of contract because the car in which such passenger is riding is diverted by the railroad company on account of a wreck and does not reach the passenger's point of destination, in consequence of which he is compelled to change into another car.

—Louisville & N. R. Co. v. Fisher, 155 Fed. 68; Scott v. Louisville & N. R. Co., Id.....83 C. C. A. 584

A railroad company cannot be held answerable to a passenger in damages because of matters which are ordinary incidents of travel, such as exposure to drafts from windows opened by, or at request of, other passengers.

—Louisville & N. R. Co. v. Fisher, 155 Fed. 68; Scott v. Louisville & N. R. Co., Id.....83 C. C. A. 584

Plaintiffs purchased first-class tickets over defendant's railroad for passage between two points, and also tickets for a berth in a sleeping car between such points; such car being operated by another company and hauled under contract by defendant. At 3 o'clock in the morning, when some 45 miles from plaintiffs' point of destination, owing to a wreck beyond such point, the sleeping car was diverted and sent around over another road to its point of destination, and plaintiffs were required to transfer into a day coach for the remainder of their journey, which was made in about two hours. The car so provided was comparatively new and in good condition, and the only material complaint in regard to it was that it was filled with passengers, and the windows were kept open; the month being August, although the night was somewhat chilly. *Held*, that such facts did not establish a breach of the contract of carriage which rendered defendant liable in damages.

—Louisville & N. R. Co. v. Fisher, 155 Fed. 68; Scott v. Louisville & N. R. Co., Id.....83 C. C. A. 584

A passenger on a railroad train alighted in the night at the town where he resided. The station, the town, and his home were all on the west side of the track, and the doors of the cars, which were vestibuled, were opened on that side. After his train had departed, he was killed by another train on a track to the eastward. *Held*, that he had ceased to be a passenger prior to his death, and the company at that time owed no duty to him as such.

—Payne v. Illinois Cent. R. Co., 155 Fed. 73.....83 C. C. A. 589

Plaintiff's intestate was riding on defendant's railroad on a through ticket, which entitled him to transportation to a junction with the next connecting road. The train on which he took passage did not stop at the junction, but stopped at a station four miles north, to which the train of the connecting road also ran over defendant's track to make connection with it. Deceased was advised of such fact, and told to get off at such station, which he did, but for some unexplained reason got back on the same train and started southward. He was soon discovered by the conductor, who put him off a half mile south of the station and told him that if he would hasten back he could still catch his connecting train, which would soon follow. The place at which he was put off was between two tunnels, and he walked back through the north one, and while talking with a man whom he met his train left the station, which was in sight and only a short distance away. He then turned southward again, walked through the first tunnel, and entered the second, which was 1,600 feet long, curving, very dark and narrow, and while in such tunnel was struck by a train and so injured that he soon died. There was no material evidence to show how he came to be struck. *Held* that, conceding that deceased was put off at a dangerous place between the two tunnels, he had passed such danger and reached a place of safety, and the proximate cause of his death was, not such negligence of the conductor, but his own voluntary act in turning back, for which defendant could not be held liable.

—Gwyn v. Cincinnati, N. O. & T. P. R. Co., 155 Fed. 88.....83 C. C. A. 648

Digitized by Google

CAUSE OF ACTION.

See "Action."

CHALLENGE.

To juror, see "Jury," § 1.

CHANCERY.

See "Equity."

CHARTER PARTIES.

See "Shipping," § 2.

CHATTEL MORTGAGES.

Effect of proceedings in bankruptcy, see "Bankruptcy," § 3.

§ 1. Requisites and validity.

Intervener contracted in writing to deliver certain goods to the bankrupts prior to their bankruptcy, to be sold by them in the usual course of their business, but that the title and right of possession of all such goods and all the proceeds of sales thereof, whether in cash or in book accounts, should be vested and remain in intervener until the purchase price of the goods had been fully paid to it; that, except for the right to resell the goods in the ordinary course of business, the bankrupts should not remove any from the city in which they were doing business; and that they should keep the goods insured for intervener's benefit. *Held*, that the bankrupts, not only held such goods for intervener, but were bound to account for and pay over the proceeds of goods sold as collected, and that the contract was therefore a conditional sale, and not a chattel mortgage.

—In re E. M. Newton & Co., 153 Fed. 841; Swofford Bros. Dry Goods Co. v. Bryant, Id. .....83 C. C. A. 23

CHECKS.

See "Bills and Notes."

CHINESE.

Exclusion or expulsion, see "Aliens," § 1.

CIRCUIT COURTS.

See "Courts," § 3.

CITIES.

See "Municipal Corporations."

CITIZENS.

See "Aliens"; "Indians."

Citizenship ground of jurisdiction of United States courts, see "Courts," § 3; "Removal of Causes," § 1.

Digitized by Google

CLAIM AND DELIVERY.

See "Replevin."

CLAIMS.

Against estate of bankrupt, see "Bankruptcy," § 3.
Against property in hands of receiver, see "Receivers," § 1.
Of patent, see "Patents," § 3.

CLERKS OF COURTS.

Appointment of to conduct judicial sale, see "Judicial Sales."

COLLATERAL UNDERTAKING.

See "Guaranty."

COLLISION.

Liability for collision caused by obstruction in navigable water, see "Navigable Waters," § 1.

§ 1. Steam vessels meeting or crossing.

Findings of the trial court which heard the testimony that a tug was solely in fault for a collision between a car float which she had in tow and a meeting steamship, on the ground that she failed in duty to pass on the starboard side of the steamship as required by the position and courses of the two vessels, affirmed.

—The Phonix, 154 Fed. 474; The Gladiator, Id.....83 C. C. A. 332

The steamer City of Berlin, with a barge in tow on a line, both ore laden, bound down the Detroit river at night, as she made the turn of two points from the course leading from the Lake St. Clair channel into the Windmill Point ranges, met and passed the Venus bound up, with the barge Tyrone in tow. Behind the Tyrone and overtaking her was the steamer Chili. Signals for passing port to port were exchanged between the Berlin and both the Venus and Chili, but when the bow of the Berlin, which had made the turn and straightened on her course, was about opposite the port quarter of the Tyrone and about 150 feet away, she came into collision with the Chili, which struck her port bow, inflicting injuries from which she afterwards sank. Under rule 24 of the rules for navigation of the Great Lakes, Act Feb. 8, 1895, c. 64, § 1, 28 Stat. 645 [U. S. Comp. St. 1901, p. 2891], the Berlin had the right of way. *Held*, on the evidence, that the Chili came out from behind the Tyrone, heading toward the course of the Berlin as the latter was approaching, and was in fault for the collision; that the Berlin was also in fault under the circumstances for not allowing more room for passing, having 500 feet of open water on her starboard side.

—Wineman v. Drake, 154 Fed. 933.....83 C. C. A. 505

§ 2. Steam vessels and sail vessels.

A collision at sea in the night between a schooner and a meeting steamer *held* due solely to the fault of the schooner in changing her course after the vessels had seen each other, and the steamer had so changed her course that there was no danger of collision if the schooner held her course.

—The Georg Dumois, 153 Fed. 833; The Clara E. Bergen, Id.....
83 C. C. A. 15

Digitized by Google

Where a sailing vessel by her unnecessary deviation from her course renders a collision with a steamer unavoidable, the steamer cannot be charged with liability.

—The Georg Dumois, 153 Fed. 833; The Clara E. Bergen, Id..... 83 C. C. A. 15

§ 3. **Vessels in tow.**

A collision in East river between a canal boat, which was one of four in tow of a tug passing down on an ebb tide, and a steamer passing up on the Brooklyn side of the center of the channel, *held* due to the fault of the tug, which, after exchanging the proper passing signal of one whistle with the steamer and properly porting her helm for a time, starboarded it again when about the center of the channel, allowing her tow to sag to port with the tide and against the steamer. The steamer *held* not in fault because of her violation of the East river statute, which required her to keep in the middle of the channel, since it in no way contributed to the collision, nor because she did not go still further to starboard than she did; her change of course being sufficient for safe passage if the tug had continued to co-operate, as she had the right to assume would be done after the exchange of signals.

—The W. N. Bavier, 153 Fed. 970; The H. M. Whitney, Id..... 83 C. C. A. 12

A steamship observed a tug and tow nearly a mile distant in the channel of the upper New York Harbor. The tug at this time approved a point on the steamer's port bow with her tow in a westerly direction across the fairway of the channel, and bound across the steamer's course. The tug and tow in fact were not moving, but the tug was attempting to take one of its scows alongside and shorten the hawser on the other. When the steamer approached she blew two whistles, which were not answered, and then blew two more, with a similar result, about 10 seconds intervening. Between the whistles the wheel was put hard astarboard, so that the steamer's course was changed 20 degrees, in an attempt to pass astern of the tow. Being unable to accomplish this, an attempt to stop was made which was ineffectual, and a collision resulted. *Held*, that the steamer was the privileged vessel required by article 21 to keep her course and speed until she had received a signal from the tug, and was therefore at fault in violating the starboard hand rule; and the tug was also at fault in attempting to perform her maneuver, which occupied from 500 to 750 feet of the channel, at a point where it was less than half a mile in width, and at a time when seagoing vessels were known to be due, without having some one in the pilot house of the tug on the lookout to answer and give signals.

—The Umbria, 153 Fed. 851; The Charles E. Matthews, Id..... 83 C. C. A. 33

A finding affirmed that a tug passing down the Hudson river at night, two scows in tow of such tug and a meeting tug, were all in fault for a collision between one of the scows and a car float alongside of the meeting tug, the tug and scows in her tow because such tows were not displaying lights and the tug also because she failed to answer the passing signal of the meeting tug, and the latter for continuing at full speed, although receiving no answer to her signal.

—The Eugene F. Moran, 154 Fed. 41; The Charles E. Matthews, Id.; The 15 D and 18 D, Id.....83 C. C. A. 153

A double collision at sea, one between a schooner and a barge in tow, and a resulting collision between two other tows, *held* due solely to the fault of one of the tugs, which, on meeting another tug with two tows, which were being overtaken by a schooner, passed to the port of such tug and tows, although her own tows were sagging in that direction on account of the wind and failed to make sufficient allowance for such sagging, the result being that the schooner was pocketed and compelled in extremis to change her course.

—The Richmond, 155 Fed. 112; The Boswell, Id.; The Iowa, Id.; The James W. Elwell, Id.; The Powell, Id.....83 C. C. A. 572

Digitized by Google

§ 4. Vessels at rest, at anchor, or at piers.

While Act March 3, 1899, c. 425, § 15, 30 Stat. 1152 [U. S. Comp. St. 1901, p. 3543], providing that it shall not be lawful to tie up or anchor vessels or other craft in navigable channels "in such manner as to prevent or obstruct the passage of other vessels or craft," was not intended to absolutely prohibit the anchoring in navigable channels, it makes it unlawful whenever the result is to obstruct other vessels in passing to such extent as to make such passing a dangerous maneuver; and the fact that other vessels have succeeded in passing one so anchored in safety is not proof that her anchorage was not in violation of the statute, or that she was not in fault for a collision with another vessel which was attempting to pass.

—The Caldy, 153 Fed. 837; The New Orleans, Id.....83 C. C. A. 19

A steamship 314 feet long, which was anchored through the night in the Brewerton channel of the Patapsco river, where it was 600 feet wide, and which was allowed to swing around so as to lie nearly across the channel, so that her stern was only about 100 feet from one side, while her anchor chain extended toward the other, *held* in fault for unnecessarily obstructing the channel and liable for a collision with another vessel, which was attempting to pass under her stern. The passing vessel also *held* in fault for not navigating with proper care and at slower speed in passing, in view of the well-known tendency of vessels to sheer when near the edge of the channel.

—The Caldy, 153 Fed. 837; The New Orleans, Id.....83 C. C. A. 19

§ 5. Lights, signals, and lookouts.

The absence of a lookout on a vessel, although a fault, is immaterial in fixing liability for a collision, where it clearly was not a contributory cause because the other vessel was seen in ample time, so that with proper navigation on the part of both vessels the collision would not have occurred.

—The Georg Dumois, 153 Fed. 833; The Clara E. Bergen, Id..... 83 C. C. A. 15

§ 6. Narrow channels, harbors, rivers, and canals.

The ferryboat Northfield left her slip on the west side of pier 1, East river, at her usual time, as the Mauch Chunk, another ferryboat, was approaching from her starboard side to enter her own slip beyond. The Northfield gave her starting signal, and then a signal of two whistles, and was proceeding across the bow of the Mauch Chunk, when she was struck by the latter and sunk. It was in the daytime, and the vessels were in full view of each other, and each also knew the arriving and leaving time of the other. The Mauch Chunk had no lookout, and did not hear the starting signal of the Northfield, nor observe that she had started until within 600 or 700 feet, when the crossing signal was heard. There was a strong flood tide, which prevented the Northfield from going further to starboard than she did, and she was only about 75 feet beyond the end of the pier when the collision occurred. *Held* that, while the Northfield was clearly in fault in not remaining in her slip until the Mauch Chunk had passed, and in attempting to cross in the bow of the latter vessel in violation of the starboard hand rule, the Mauch Chunk was also in fault for failure to keep an efficient lookout and for insistence on the privilege given her by such rule, in disregard of the surrounding circumstances, after it was manifest that departure therefrom could alone prevent collision.

—The Mauch Chunk, 154 Fed. 182.....83 C. C. A. 276

§ 7. Special circumstances and errors in extremis.

A collision at sea on a foggy night between a schooner and a steamship on crossing courses was brought about primarily by the fault of the steamer in maintaining an excessive speed in the fog, and not keeping an efficient lookout, in consequence of which she was close upon the schooner before she saw her or heard her fog signals. Just prior to the collision, the mate of the schooner took the light from the binnacle and placed it on top of the house, where it was mistaken by the steamer

Digitized by Google

for the stern light of an overtaken vessel, in consequence of which the steamer ported when she should have starboarded, and thus made collision certain. *Held*, that such act of the mate did not render the schooner liable as for a contributory fault, because it was done in extremis, when the steamer was bearing down directly upon the schooner at high speed, apparently without seeing her.

—The Furnessia, 154 Fed. 348.....83 C. C. A. 126

A perverse adherence to the navigation rules is not justifiable, where it is manifest that such course is certain to result in danger of collision.

—The Mauch Chunk, 154 Fed. 182.....83 C. C. A. 276

Where a moving vessel was clearly in fault for a collision with one at anchor, the latter will not be held in fault because at the last moment she did something that contributed to the collision, or omitted to do something which might have avoided it.

—The Pacific, 154 Fed. 943.....83 C. C. A. 515

A dredge which had been engaged for some months in dredging the channel of the Delaware river below Philadelphia, 90 feet to the westward and 175 feet to the eastward of the line of the Edgemoor range lights, at night moved to the eastward 350 feet from the range line and 175 feet outside of the dredged channel, where she anchored for the night, carrying proper anchor lights and with her bow down stream. On her west side lay a tug with the bow up stream. The anchor lines of the dredge extending to the westward were weighted and sunk, while two extending eastward were not. While in such position the large steamship Maling, coming down from Philadelphia and drawing more than 20 feet aft, after rounding the buoy 1½ miles above the dredge, took a course which would have carried her slightly to the eastward of the dredge. Seeing her approaching nearly head on, the watchman on the dredge seized a lantern, and waved it from east to west. The tug, also, as contended by the steamship, gave a signal of a single blast on which the steamship, when about five lengths distant, ported and attempted to go to the westward, but came into collision with the stern of the dredge. The Maling was clearly in fault for being not only on the wrong side of the channel, but entirely outside of and heading away from it. *Held*, that the dredge was not chargeable with contributory fault because of the position in which she was anchored, nor because her port lines were not weighted, since she was not in the fairway of the Maling, and owed her no duty with respect to the lines to the eastward, and neither act, therefore, was a contributory cause of the collision, nor was she in fault for the signal given by her watchman, which, if improper, was an act done in extremis when the dredge was in imminent danger of collision, or of having her lines cut by a vessel out of her proper course. *Held*, also, that the tug was not chargeable with fault because, as alleged, she was carrying sailing lights, nor because she gave alarm signals, neither of which contributed to the collision, but both of which were calculated to warn the Maling of her improper course, nor because of her passing signal, which, if given, was in extremis and in aid of the signals from the dredge.

—The Pacific, 154 Fed. 943.....83 C. C. A. 515

COMBINATIONS.

See "Monopolies," § 1.

COMMERCE.

Carriage of goods and passengers, see "Carriers"; "Shipping."

COMMERCIAL PAPER.

See "Bills and Notes."

Digitized by Google

COMMON CARRIERS.

See "Carriers."

COMPENSATION.

For property taken for public use, see "Eminent Domain," § 1.

COMPETENCY.

Of jurors, see "Jury," § 1.

COMPETITION.

Unfair competition, see "Trade-Marks and Trade-Names," § 1.

COMPROMISE AND SETTLEMENT.

Effect of settlement by client on rights of attorney, see "Attorney and Client," § 1.

COMPUTATION.

Of interest, see "Interest," § 1.

CONCEALMENT.

Of dutiable articles, see "Customs Duties," § 5.

CONCURRENT JURISDICTION.

Of courts, see "Courts," § 4.

CONDEMNATION.

Taking property for public use, see "Eminent Domain."

CONDITIONAL SALES.

See "Sales," § 3.

CONDITIONS.

In contracts and conveyances.

See "Contracts," §§ 2, 4.
Bill of lading, see "Shipping," § 4.
Contracts for public work, see "Municipal Corporations," § 1.
Insurance policies, see "Insurance," § 3.

Precedent to actions or other proceedings.

Against municipal corporation, see "Municipal Corporations," § 2.

Digitized by Google

CONFIRMATION.

Of lease of Indian allotment, see "Indians."

CONFLICT OF LAWS.

As to insurance, see "Insurance," § 1.
As to transfers by bankrupt, see "Bankruptcy," § 3.
Conflicting jurisdiction of courts, see "Courts," § 4.

CONFUSION OF GOODS.

§ 1. **Rights and remedies of persons interested.**

Defendant wrongfully entered upon land on which complainant held a valid oil and gas lease, and drilled a well from which it continued to take and market gas pending suit by complainant to establish its rights. Defendant conducted the gas into a pipe line in which gas from 60 wells was mingled, taking no measures to determine the quantity or value of the gas so wrongfully taken. *Held*, that on an accounting therefor, conceding that defendant's claim of right was made in good faith, it was bound to fully compensate complainant for its loss, and that in ascertaining such compensation every reasonable doubt should be resolved against it; that under the evidence and the peculiar circumstances of the case complainant was entitled to recover one-sixtieth part of the amount realized by defendant from the entire product of the 60 wells.

—Great Southern Gas & Oil Co. v. Logan Natural Gas & Fuel Co., 155 Fed. 114.....83 C. C. A. 574

CONSIDERATION.

Of fraudulent conveyance, see "Fraudulent Conveyances," § 1.

CONSPIRACY.

Combinations to monopolize trade, see "Monopolies," § 1.
Presumptions and burden of proof in prosecution for conspiracy to defraud, see "Criminal Law," § 3.

CONSTRUCTIVE TRUSTS.

See "Trusts," § 1.

CONTEMPT.

Disobedience of order in bankruptcy proceedings, see "Bankruptcy," § 3.
Violation of injunction, see "Injunction," § 1.

CONTRACTS.

Agreements within statute of frauds, see "Frauds, Statute of."
Damages for breach, see "Damages," § 1.
Maritime contracts, see "Admiralty," § 1.
Operation and effect of customs or usages, see "Customs and Usages."
Operation and effect of gaming laws, see "Gaming," § 1.
Specific performance, see "Specific Performance."

Digitized by Google

Contracts of particular classes of persons.

See "Carriers," § 1; "Corporations," § 4; "Master and Servant"; "Municipal Corporations," § 1.
Foreign corporations, see "Corporations," § 5.
Sleeping car company, see "Carriers," § 1.

Contracts relating to particular subjects.

See "Copyrights," § 1; "Interest"; "Patents," § 4.
Transportation of passengers, see "Carriers," § 1.

Particular classes of express contracts.

See "Bills and Notes"; "Chattel Mortgages"; "Guaranty"; "Insurance"; "Joint Adventures"; "Partnership"; "Sales."
Affreightment, see "Shipping," § 4.
Agency, see "Principal and Agent."
Charter parties, see "Shipping," § 2.
Employment, see "Master and Servant."
Sales of realty, see "Vendor and Purchaser."

§ 1. Requisites and validity.

A provision in a contract of affreightment exempting a carrier by sea from liability for loss or damage to cargo "occasioned by negligence, default or error of judgment of the pilot, master or mariners," may be enforced in a court of the United States where the contract was made in a country by whose laws such stipulation was legal and no part of it was to be performed in the United States, and where it related to the transportation of property on a foreign vessel on a voyage which did not include a port of the United States.
—The Fri, 154 Fed. 333.....83 C. C. A. 205

The owner of one-half of a patent conveyed his half to a third person in trust to form a corporation, to convey his interest in the patent to this corporation for one-half of its stock, and to so distribute his stock that the trustee should receive 21⅔/250 of his share and should hold 215⅚/250 thereof in trust for his wife and child. The owner of the other half agreed in writing to convey his half to the corporation for one-half its stock and to convey to the trustee as his own personal property 21⅔/250 of his share in consideration of services rendered in the organization of the corporation. *Held* not a unilateral contract or an agreement for an option, but an executed agreement on the part of the first party and an executory one on the part of the second party.
—Howe v. Howe & Owen Ball Bearing Co., 154 Fed. 820.....
83 C. C. A. 536

Where plaintiff accepted defendant's proposition to furnish all plaintiff's requirements in steel castings for the remainder of the year, at prices mentioned, defendant was obligated to take from plaintiff all castings which their business should require, and the contract was therefore not void for want of mutuality.
—Lima Locomotive & Machine Co. v. National Steel Castings Co., 155 Fed. 77.....83 C. C. A. 593

§ 2. Construction and operation.

The basis of waiver is estoppel, and where there is no estoppel there is no waiver.
—Hampton Stave Co. v. Gardner, 154 Fed. 805.....83 C. C. A. 521

§ 3. Rescission and abandonment.

A breach of a covenant, which does not go to the whole consideration of a contract, but is subordinate and incidental to its main purpose, does not constitute a breach of the entire agreement, does not authorize the injured party to rescind the contract, but he is still bound to perform his part of it, and his only remedy is a recovery of damages for the breach.
—Howe v. Howe & Owen Ball Bearing Co., 154 Fed. 820.....
83 C. C. A. 536

Digitized by Google

CO

Of lease of Indian allotment, se

CON

As to insurance, see "Insurance
As to transfers by bankrupt,
Conflicting jurisdiction of cour

CONF

§ 1. **Rights and remedies** o
Defendant wrongfully e
valid oil and gas lease, an
and market gas pending s
fendant conducted the gas
mingled, taking no measu
so wrongfully taken. *Hel*
defendant's claim of righ
compensate complainant
pensation every reasonab
der the evidence and the
was entitled to recover
fendant from the entire p
—Great Southern G
155 Fed. 114...

Of fraudulent conveyance, se

Combinations to monopolize
Presumptions and burden o
see "Criminal Law," § 3.

CO

See "Trusts," § 1.

Disobedience of order in
Violation of injunction,

Agreements within sta
Damages for breach, s
Maritime contracts, s
Operation and effect
Operation and effec
Specific performan

Digitized by Google

CORRECTION.

at trial, see "Trial," § 3.

COSTS.

," § 3.

COUNTIES.

,

COURTS.

d States courts, see "Criminal Law," § 2.
ds, see "Evidence," § 1.
side transfer by bankrupt, see "Bankruptcy," § 3.
urt as ground for abatement of action in federal
Revival," § 1.
court to United States court, see "Removal of

eal and Error."

xercise of jurisdiction in general.
jurisdiction, a general judgment for the defend-
it renders the merits of the case res adjudicata.
judgment of dismissal for want of jurisdiction,
ered.
Gold & Copper Co., 155 Fed. 110. .83 C. C. A. 570

ization, and procedure in general.
taken from an original decree, and a bill of re-
tters within the pleadings and jurisdiction of the
decree, were res judicata, and not reviewable on
ntal decree.
e, 154 Fed. 432.....83 C. C. A. 252

ts.
Y. § 66, creating an attorney's lien on the client's
and providing for the enforcement thereof on peti-
e practice act, but created a right and provided a
cement, and was therefore controlling on the federal
ch state.
r & Co., 154 Fed. 22.....83 C. C. A. 106

has power under the statute of New Jersey in the ex-
retion, to permit a bill of particulars in an action of
amended on the trial.
Spalding, 154 Fed. 27.....83 C. C. A. 111

s of the highest courts of the state interpreting a state stat-
m and consistent, are controlling on the federal courts; but
state decisions not in construction of the particular statute
rsy.
nan v. Hilliard, 154 Fed. 339.....83 C. C. A. 117

federal courts sitting as courts of chancery may entertain bills
side wills, such courts nevertheless observe the public policy of the
where the property to be recovered is situated and the court sits
ecting the time within which such suits shall be brought.
—Palmer v. Bradley, 154 Fed. 311.....83 C. C. A. 231

Digitized by Google

§ 4. Performance or breach.

Where a contract, made on the percentage basis, for railroad bridge construction in Mexico provided for payment on the Mexican money basis, the exchange to be effected on the Mexican rate existing at the time in Mexico City, the bridge company, having contracted with certain employés taken from the United States for payment in United States currency or in Mexican at a flat rate of exchange, was chargeable with any loss suffered because of changes in the rate of exchange during the performance of the contract.

—Freygang v. Vera Cruz & P. R. Co., 154 Fed. 640; Vera Cruz & P. R. Co. v. Freygang, Id. ..... 83 C. C. A. 414

A contract for Mexican bridge construction provided that the railroad company should pay the contractor the exact cost plus 15 per cent. for his profit, and that all payments should be made in Mexican money at the rate of exchange existing at the time of payment in Mexico City. $686,481.37 was paid in Mexico to American employés, and to reimburse plaintiff for this sum the railroad company forwarded gold drafts for $343,240.68, which the bridge company converted into Mexican currency at the rate of $2.20, making a gain of $31,203.69. *Held*, that the bridge company was properly required to account for such gain to the railroad company.

—Freygang v. Vera Cruz & P. R. Co., 154 Fed. 640; Vera Cruz & P. R. Co. v. Freygang, Id. ..... 83 C. C. A. 414

A contract for railroad bridge construction in Mexico provided that the railroad company's engineers should supervise the work, approve the number of men to be sent from the United States, their salaries, fitness, the number to be employed, that they should O. K. all important purchases of material and those obtained outside of Mexico, with the right to determine what were important, to voucher and approve all expense bills, and pay rolls in triplicate, etc. *Held* that, the railroad company having accepted and paid 44 out of 49 of such estimates without question, the court in an action on the contract properly held that the estimates so made were prima facie evidence of the work done, and that the account should be based on the estimate, subject to correction, contradiction, or impeachment for error, mistake, omission, or concealment.

—Freygang v. Vera Cruz & P. R. Co., 154 Fed. 640; Vera Cruz & P. R. Co. v. Freygang, Id. ..... 83 C. C. A. 414

Defendant, having a claim against L., and desiring to obtain certain documentary evidence in possession of the husband of plaintiff's decedent, contracted to pay decedent or her assigns $4.325 on a specified date, in consideration of a delivery of the papers, and further obligated himself to pay decedent, in addition, $5,000 out of any money he might recover and collect from L. or F. under a specified contract, on condition that defendant recover judgment against L. for the amounts of money that might be recovered against defendant thereafter, for which defendant had claims against L. under his contract. Defendant thereafter compromised his suit against L., taking the note of a third person in full satisfaction of the claim. *Held*, that such compromise rendered performance of the condition by which decedent was entitled to the additional payment impossible, and she, not being responsible therefor, was entitled to recover the additional payment, as though the condition had been performed.

—Camden v. Jarrett, 154 Fed. 788 ..... 83 C. C. A. 492

Plaintiff having contracted in April, 1902, to furnish defendant's requirements of steel castings for the remainder of the year, furnished the same until August 1st, when, because of the necessity of repairs, it was compelled to close its plant until November 19th, during which time defendant was compelled to withdraw its patterns from plaintiff and place them with other founders, having made arrangements on the best obtainable terms to obtain what plaintiff was unable to furnish. *Held*, that defendant was not bound to cancel such new contracts and return its patterns to plaintiff on notice given in October that plaintiff's plant would be

Digitized by Google

in operation, ready to turn out work under the contract on or before November 19th.
—Lima Locomotive & Machine Co. v. National Steel Castings Co., 155 Fed. 77.....83 C. C. A. 593

Nothing will excuse the performance of a contract, except an act of God or the public enemy.
—Lima Locomotive & Machine Co. v. National Steel Castings Co., 155 Fed. 77.....83 C. C. A. 593

§ 5. Actions for breach.
Whether an action is grounded upon an illegal contract depends upon whether proof of such contract is necessary to establish the cause of action alleged. If so, the court will not enforce it nor any alleged rights arising out of it.
—Pittsburgh Const. Co. v. West Side Belt R. Co., 154 Fed. 929..... 83 C. C. A. 501

CONTRIBUTORY FAULT.

Of collision, see "Collisions," § 7.

CONTRIBUTORY NEGLIGENCE.

In general, see "Negligence," § 1.
Of person killed by operation of railroad, see "Railroads," § 2.
Of servant, see "Master and Servant," § 2.

CONVERSION.

Wrongful conversion of personal property, see "Trover and Conversion."

CONVEYANCES.

See "Chattel Mortgages."
In fraud of creditors, see "Fraudulent Conveyances."

COPYRIGHTS.

§ 1. Title, conveyances, contracts, and regulations.
Where the author or owner of a painting is a citizen or subject of a foreign nation having no reciprocal copyright relations with the United States, and therefore not entitled to copyright such painting under Rev. St. § 4952 [U. S. Comp. St. 1901, p. 3406], as amended by Act March 3, 1891, c. 565, 26 Stat. 1110 [U. S. Comp. St. 1901, p. 3417], he cannot, while retaining the painting itself, convey such right to another.
—Bong v. Alfred S. Campbell Art Co., 155 Fed. 116....83 C. C. A. 576

CORPORATIONS.

Attorney's lien in stockholder's suit, see "Attorney and Client," § 1.
Bankruptcy of, see "Bankruptcy."

Particular classes of corporations.

See "Municipal Corporations"; "Railroads."
Insurance companies, see "Insurance."
Towing companies, see "Shipping," § 5.

Digitized by Google

§ 1. Capital, stock, and dividends.

The facts stated in the bill constituted the complainants the equitable owners of the 11,300 shares of stock assigned to them.

—Rogers v. Penobscot Min. Co., 154 Fed. 606.....83 C. C. A. 380

§ 2. Members and stockholders.

Equity rule 94 and the other rules applicable to stockholders' suits do not control this suit, because complainants' cause of action existed independently of, and antedated, their rights as stockholders.

—Rogers v. Penobscot Min. Co., 154 Fed. 606.....83 C. C. A. 380

§ 3. Officers and agents.

A Vermont statute provides that no debts shall be contracted by a corporation exceeding in amount two-thirds of the capital stock actually paid in, and that a director, assenting to the creation of an indebtedness exceeding such amount, becomes personally liable for the excess. *Held*, that the liability so imposed was for the benefit of all of the creditors of the corporation, and was therefore enforceable only by a proceeding in equity.

—Lyman v. Hilliard, 154 Fed. 339.....83 C. C. A. 117

§ 4. Corporate powers and liabilities.

No action of the stockholders is necessary to authorize or ratify an agreement by the directors of a corporation to assume a mortgage on property purchased by the corporation as a part payment of the purchase price.

—In re Beaver Knitting Mills, 154 Fed. 320.....83 C. C. A. 240

A resolution passed by the board of directors of a corporation on April 6, 1901, authorizing and directing the president to execute on behalf of the company "an agreement * * * dated April 5, 1901, regarding extension of time of payment of second mortgage of $6,000," *held* to refer to and to authorize the execution of a particular written agreement which was dated April 5th, and to make a provision of such agreement by which it assumed payment of the mortgage binding upon the company, the mortgage having been given by a prior owner upon property which he subsequently conveyed to the company.

—In re Beaver Knitting Mills, 154 Fed. 320.....83 C. C. A. 240

Where a contract for railroad bridge construction on a percentage basis originally limited the contractor's net compensation for building the original bridges to $33,000, and thereafter the assistant to the president of the railroad company was sent to confer concerning expediting the work, and then waived the compensation limit so fixed, and the railroad company did not promptly repudiate his acts, it would be assumed that he had authority to act in the premises, and that the waiver was binding on the corporation.

—Freygang v. Vera Cruz & P. R. Co., 154 Fed. 640; Vera Cruz & P. R. Co. v. Freygang, Id.....83 C. C. A. 414

§ 5. Foreign corporations.

Under the Pennsylvania act of April 22, 1874 (P. L. 108), which provides that it shall be unlawful for a foreign corporation to do any business in the state until it shall have registered and complied with certain other requirements to bring it within the jurisdiction of the courts in the state, and also makes it a criminal offense for any officer or agent to transact any business within the state for a foreign corporation which has not complied with its requirements, a contract entered into in Pennsylvania by a foreign corporation which had not at the time complied with the statute to construct a railroad within the state is illegal and void, and no action can be maintained thereon, either against the other party or a guarantor to recover the contract price of work done thereunder, although the corporation complied with the statute prior to the doing of the work.

—Pittsburgh Const. Co. v. West Side Belt R. Co., 154 Fed. 929.....83 C. C. A. 501

Digitized by Google

CORRECTION.

Of irregularities and errors at trial, see "Trial," § 3.

COSTS.

In admiralty, see "Admiralty," § 3.

COUNTIES.

See "Municipal Corporations."

COURTS.

Criminal jurisdiction of United States courts, see "Criminal Law," § 2.
Judicial notice of court records, see "Evidence," § 1.
Jurisdiction of action to set aside transfer by bankrupt, see "Bankruptcy," § 3.
Pendency of action in state court as ground for abatement of action in federal court, see "Abatement and Revival," § 1.
Removal of action from state court to United States court, see "Removal of Causes."
Review of decisions, see "Appeal and Error."

§ 1. Nature, extent, and exercise of jurisdiction in general.

Where the court has no jurisdiction, a general judgment for the defendant is erroneous, because it renders the merits of the case res adjudicata. It must be reversed and a judgment of dismissal for want of jurisdiction, or without prejudice, entered.

—Maxwell v. Federal Gold & Copper Co., 155 Fed. 110..83 C. C. A. 570

§ 2. Establishment, organization, and procedure in general.

Where no appeal was taken from an original decree, and a bill of review was denied, all matters within the pleadings and jurisdiction of the court, expressed in the decree, were res judicata, and not reviewable on appeal from a supplemental decree.

—Quinton v. Neville, 154 Fed. 432.....83 C. C. A. 252

§ 3. United States courts.

Code Civ. Proc. N. Y. § 66, creating an attorney's lien on the client's cause of action, etc., and providing for the enforcement thereof on petition, was not a mere practice act, but created a right and provided a remedy for its enforcement, and was therefore controlling on the federal courts sitting in such state.

—In re Baxter & Co., 154 Fed. 22.....83 C. C. A. 106

A federal court has power under the statute of New Jersey in the exercise of its discretion, to permit a bill of particulars in an action of ejectment to be amended on the trial.

—Lamar v. Spalding, 154 Fed. 27.....83 C. C. A. 111

The decisions of the highest courts of the state interpreting a state statute, if uniform and consistent, are controlling on the federal courts; but not so as to state decisions not in construction of the particular statute in controversy.

—Lyman v. Hilliard, 154 Fed. 339.....83 C. C. A. 117

While federal courts sitting as courts of chancery may entertain bills to set aside wills, such courts nevertheless observe the public policy of the state where the property to be recovered is situated and the court sits respecting the time within which such suits shall be brought.

—Palmer v. Bradley, 154 Fed. 311.....83 C. C. A. 231

Digitized by Google

Appeals to the Court of Appeals of the Indian Territory from orders, judgments, and decrees of the trial courts made in the exercise of their probate jurisdiction must be taken, and the practice therein is governed, by the method of taking and the practice in appeals from the Circuit Courts to the Circuit Court of Appeals of the Eighth Circuit (Act March 3, 1905, c. 1479, § 12, 33 Stat. 1081 [U. S. Comp. St. Supp. 1905, p. 150]), and not by sections 1385, 1386, Mansf. Dig. Ark.

—Morrison v. Burnette, 154 Fed. 617.....83 C. C. A. 391

Cross-Errors are not judicable in a federal appellate court.

—Rogers v. Penobscot Min. Co., 154 Fed. 606.....83 C. C. A. 380
Morrison v. Burnette, 154 Fed. 617.....83 C. C. A. 391

The question whether or not a jury has been induced by passion or prejudice to assess an excessive amount of damages is not reviewable in a federal appellate court.

—Chicago, M. & St. P. Ry. Co. v. Heil, 154 Fed. 626...83 C. C. A. 400

The remedy given to a judgment creditor by Act Pa. July 12, 1842 (P. L. 339), by the arrest and imprisonment of the defendant on a showing of fraudulent removal or concealment of his property, is one "to reach the property of a judgment debtor" within the meaning of Rev. St. § 916 [U. S. Comp. St. 1901, p. 684], and under said section is available in the federal courts.

—Ex parte Crawford, 154 Fed. 769.....83 C. C. A. 474

Rev. St. § 649 [U. S. Comp. St. 1901, p. 525], which requires a stipulation in writing waiving a jury to authorize trial of issues of fact by the court alone, is not applicable to default cases, and in an action of replevin brought in a federal court within the state of Illinois, in which the defendant makes default, the court is authorized to assess the damages without a jury under the Illinois practice act (3 Starr & C. Ann. St. Ill. 1896, c. 110, par. 41).

—Midland Contracting Co. v. Toledo Foundry & Machine Co., 154 Fed. 797.....83 C. C. A. 489

Upon all questions of jurisdiction, the sum demanded, not the amount recovered, recoverable or admitted, is the amount in dispute, unless the record proves to a legal certainty either that the sum demanded cannot be as a matter of law the amount in dispute, or that it is, as a matter of fact, a colorable and fictitious amount inserted in bad faith to invoke jurisdiction.

—Hampton Stave Co. v. Gardner, 154 Fed. 805.....83 C. C. A. 521

The jurisdiction of a national court may not be renounced or denied where the facts requisite to confer it appear directly or by just inference from any part of the record.

—Howe v. Howe & Owen Ball Bearing Co., 154 Fed. 820.....
83 C. C. A. 536

A suit cannot be properly dismissed by a Circuit Court as not substantially involving a controversy within its jurisdiction, unless the facts when made to appear on the record create a legal certainty of that conclusion.

—Howe v. Howe & Owen Ball Bearing Co., 154 Fed. 820.....
83 C. C. A. 536

The matter in dispute was the undivided half of a patent for an invention. There was evidence that 21/155 was sold for $5,000 17 months before the suit was commenced; that the defendant was a citizen and resident of Missouri; that one of the complainants was a corporation of Maine, and the other a stockholder, director, and president thereof; and that the articles of incorporation recited his residence Evansville, Ind.

Held, there was sufficient evidence to sustain the conclusion of the lower court that the value of the property involved in the controversy was more than $2,000, and that the citizenship of the parties was diverse.

—Howe v. Howe & Owen Ball Bearing Co., 154 Fed. 820.....
83 C. C. A. 536

Digitized by Google

The laws enacted by a territorial Legislature, subject to disapproval by Congress, are not laws of the United States, and a suit arising under them, as where a corporation organized under them is a party to the suit, does not arise under the laws of the United States, and a federal court has no jurisdiction on that ground.
—Maxwell v. Federal Gold & Copper Co., 155 Fed. 110..... 83 C. C. A. 570

Diversity of citizenship between citizens of different states is indispensable to sustain the jurisdiction of a federal court on that ground. A controversy between a citizen or citizens of a state or states and a citizen or citizens of a territory or territories will not confer jurisdiction upon a national court.
—Maxwell v. Federal Gold & Copper Co., 155 Fed. 110..... 83 C. C. A. 570

A Circuit Court of the United States has power to issue its writ of scire facias to revive its judgment and to prescribe a reasonable method of service thereof without the district where the judgment defendant has departed therefrom. Such power is derived from the Constitution and Rev. St. § 716 [U. S. Comp. St. 1901, p. 580], and cannot be restrained, limited, or rendered less efficacious by the statutes of a state.
—Collin County Nat. Bank of McKinney, Tex., v. Hughes, 155 Fed. 389.....83 C. C. A. 661

The conformity act (Rev. St. §§ 914, 915, 916 [U. S. Comp. St. 1901, p. 684]) empowers a Circuit Court to use a similar remedy to that provided by a state statute to enforce its judgments, but does not require it to follow the method prescribed by a state statute in serving a writ of scire facias to revive a judgment on a nonresident defendant if it deems such method insufficient.
—Collin County Nat. Bank of McKinney, Tex., v. Hughes, 155 Fed. 389.....83 C. C. A. 661

The jurisdiction of a national court over a controversy once lawfully acquired includes the power to enforce its judgment or decree, and this power may not be destroyed or restrained by the legislation or lack of legislation of the states.
—Collin County Nat. Bank of McKinney, Tex., v. Hughes, 155..... Fed. 389.....83 C. C. A. 661

§ 4. Concurrent and conflicting jurisdiction, and comity.
A Circuit Court of the United States sitting in equity has no authority to enjoin a party to a judgment rendered on its law side from suing out a writ of error from the Circuit Court of Appeals to review said judgment.
—Macrum v. United States, 154 Fed. 653.....83 C. C. A. 427

CREDITORS.

See "Bankruptcy"; "Fraudulent Conveyances."
Of devisees or legatees, see "Wills," § 3.

CRIMINAL LAW.

Competency of jurors, see "Jury," § 1.
Indictment, information, or complaint, see "Indictment and Information."

Particular offenses.

See "Assault and Battery," § 1.
Against customs laws, see "Customs Duties," § 5.
Against land laws, see "Public Lands," § 1.
Against postal laws, see "Post Office," § 1.
Keeping disorderly house, see "Disorderly House."

Digitized by Google

§ 1. Parties to offenses.

Under Pen. Code Alaska, §§ 186, 188, which abolish the old distinctions between principal and accessory before the fact, one who aids and abets another in the commission of a crime may be charged in the indictment and convicted as a principal.

—Rosencranz v. United States, 155 Fed. 38.....83 C. C. A. 634

§ 2. Jurisdiction.

Under the rule that when a court has jurisdiction of a crime a statute which merely confers the same judisdiction on another court, or authorizes a municipality to define and punish the same act, does not deprive the first court of its jurisdiction unless there is an express provision or clear implication to that effect, Act April 28, 1904, c. 1778, 33 Stat. 529, conferring power on municipalities in Alaska to prohibit certain things and punish the same as misdemeanors, and which repeals all prior acts and parts of acts inconsistent therewith, although acted upon by a town, does not affect the jurisdiction of the District Court over prosecutions for the same acts which are made offenses by Carter's Alaska Code March 3, 1899, c. 429, 30 Stat. 1253, there being no inconsistency between the dual jurisdictions.

—Rosencranz v. United States, 155 Fed. 38.....83 C. C. A. 634

An ordinance prohibiting gambling and prescribing punishment for the same, enacted by a town of Alaska under authority conferred by Act April 28, 1904, c. 1778, 33 Stat. 529, does not deprive the district courts of jurisdiction of a prosecution for gambling within the limits of the town, instituted under the Penal Code of the district, which makes the same a criminal offense.

—Hornstein v. United States, 155 Fed. 48.....83 C. C. A. 644

§ 3. Evidence.

The presumption that accused would not remain a party to a conspiracy to defraud after his co-conspirators had adopted a criminal course by using the United States mails in furtherance of their scheme overcame the inference of fact that he was still a party to such conspiracy arising from proof of his former connection therewith.

—Dalton v. United States, 154 Fed. 461.....83 C. C. A. 317

§ 4. Trial.

During the trial of a criminal case the district attorney stated to the court in the presence of the jury that he was informed that attempts had been made by a brother of defendant to induce persons who were acquainted with jurors in the case to influence them in favor of defendant, and such attorney was directed by the court to investigate the matter, and, if he thought the information correct, to institute proceedings in contempt. On exceptions by defendant's counsel and on their request, the court at once admonished the jury that they should not be influenced in favor of or against either party by what had been said, but should lay the same entirely out of their minds and consider the case on the evidence alone, which admonition was repeated in the charge. *Held*, that the occurrence was not prejudicial to defendant so as to require a reversal of a judgment of conviction which was amply supported by the evidence.

—Carroll v. United States, 154 Fed. 425.....83 C. C. A. 245

It is a general rule, with rare exceptions arising from extreme cases, that prejudice created by unwarranted statements of counsel in the presence of the jury is sufficiently cured by an admonition by the court to the jury to wholly disregard such statements.

—Carroll v. United States, 154 Fed. 425.....83 C. C. A. 245

The use of language by counsel calculated to prejudice a defendant in a criminal case and not justified by the evidence is improper and censurable and should be discontinued by the court, but invective based on the evidence and inferences legitimately to be drawn therefrom is not inhib-

Digitized by Google

ited, and it is usually within the discretion of the trial court to determine whether or not the limits of professional propriety have been exceeded.
—Johnston v. United States, 154 Fed. 445.....83 C. C. A. 299

Where the charge of the court in a criminal case was correct and clear in the interpretation of the statute and the definition of the issues and the burden and measure of proof required to authorize conviction, without detailing or reviewing the evidence, the refusal of requests referring to and predicated upon different phases of the evidence was not error.
—Gourdain v. United States, 154 Fed. 453.....83 C. C. A. 309

§ 5. Motions for new trial and in arrest.
The overruling, instanter, of motions for new trial and in arrest of judgment in a criminal case, which raised only questions that were considered during the trial, and the refusal to hear argument or to grant an extension of time to prepare and file written motions and specifications, was not a refusal to consider such motions nor a denial to defendant of any right.
—Gourdain v. United States, 154 Fed. 453.....83 C. C. A. 309

§ 6. Appeal and error, and certiorari.
Where the record in the appellate court does not contain the whole charge of the trial court, it will be presumed that it properly charged upon every branch of the case and that further instructions were given to correctly modify erroneous instructions shown by the record, if it is clear that they could have been so corrected.
—Johnston v. United States, 154 Fed. 445.....83 C. C. A. 299

The reversal of a judgment of conviction in a criminal case and the remanding of the case for a new trial generally leaves the trial court free to proceed as though the cause had never been tried, and it may consolidate other indictments for trial with those upon which the first trial was had.
—Booth v. United States, 154 Fed. 836.....83 C. C. A. 552

CUSTOMS AND USAGES.

Defendant, which had recently built a mill for the crushing of cotton seed at New Roads, La., authorized a broker in New Orleans by telegraph to sell for it a quantity of oil cake for future deliveries "F. O. B. New Roads," at certain prices which had been quoted by the broker as prevailing in the market. The broker negotiated a sale to plaintiff, and wired defendant for its acceptance, which was also sent by wire. On receipt of the sale contract, defendant refused to execute the same, because it provided for delivery of the cake at a shipping port. In an action to recover damages for breach of the contract, plaintiff claimed that the delivery provided for in the contract was in accordance with the usage of the market and the rules of the International Cottonseed Crushers' Association, of which, however, defendant was not a member. *Held*, that the question whether a contract of sale binding on defendant was made by the correspondence and acts of the broker, in view of the evidence as to usage, was one for the jury.
—New Roads Oilmill & Mfg. Co. v. Kline, Wilson & Co., 154 Fed. 296.....83 C. C. A. 1

Whether a trade custom or usage is established by the evidence in a case, and, if so, whether it was known to a party contracting, or was so general and well established that he must be presumed to have known of and contracted with reference to it, are questions for the jury.
—New Roads Oilmill & Mfg. Co. v. Kline, Wilson & Co., 154 Fed. 296.....83 C. C. A. 1

In order that a usage may be read into a written contract it must be consistent with the terms of the writing.
—New Roads Oilmill & Mfg. Co. v. Kline, Wilson & Co., 154 Fed. 296.....83 C. C. A. 1

Digitized by Google

It is competent for the parties to a contract to exclude a usage therefrom.

—New Roads Oilmill & Mfg. Co. v. Kline, Wilson & Co., 154 Fed. 296.....83 C. C. A. 1

The usage of a trade being always eligible to supersede the ordinary or public meaning of words as used in a contract, it is merely a question for the particular case whether the parties have in fact spoken according to that standard, and, if one of the parties was not a member of the trade or circle in which the usage obtained, his actual knowledge of it as applicable to the transaction must be shown before it can be inferred that he contracted with reference thereto.

—New Roads Oilmill & Mfg. Co. v. Kline, Wilson & Co., 154 Fed. 296.....83 C. C. A. 1

Where a New York fire policy, providing that it should expire at noon on a specified day, was performable in Virginia, parol evidence was admissible to show the custom of the place where the property was insured for the purpose of determining whether the parties intended the time to be governed by standard or solar time.

—Globe & Rutgers Fire Ins. Co. of New York v. David Moffat Co., 154 Fed. 13.....83 C. C. A. 91

While evidence of custom and usage is admissible to explain the meaning of words and phrases used in a written contract and to annex thereto certain incidents which circumstances indicate the parties intended, when the words used do not necessarily exclude the operation of such custom or usage, evidence thereof is inadmissible to contradict the contract.

—Lima Locomotive & Machine Co. v. National Steel Castings Co., 155 Fed. 77.....83 C. C. A. 593

Where plaintiff had knowledge that its furnace was working badly, and that normal results could not be relied on, at the time it contracted to supply defendant's requirements of steel castings for the remainder of the year, the subsequent necessity to shut down its plant for repairs was not an "accident" or an unavoidable cause of delay, within a custom or usage among manufacturers of steel castings that all contracts are subject to the contingency of accidents and unavoidable delays.

—Lima Locomotive & Machine Co. v. National Steel Castings Co., 155 Fed. 77.....83 C. C. A. 593

CUSTOMS DUTIES.

§ 1. **Validity, construction, and operation of customs laws in general.**

Tariff Act July 24, 1897, c. 11, § 7, 30 Stat. 205 [U. S. Comp. St. 1901, p. 1693], providing that the component material of chief value in imported merchandise shall be determined with reference to the value of the components in their condition as found in the article, means the state which the materials are in when put together, without regard to their value after being advanced to completion; and articles of cotton covered with varnish, in which, before combination, the latter is of less value, should be regarded as composed in chief value of cotton, irrespective of the fact that subsequent labor in applying the varnish may render it the component of chief value in the completed articles.

—United States v. Johnson & Johnson, 154 Fed. 39...83 C. C. A. 151

In construing Tariff Act July 24, 1897, c. 11, § 1, Schedule L, par. 391, 30 Stat. 187 [U. S. Comp. St. 1901, p. 1670], relating to "all manufactures * * * of which silk is the component material of chief value," and containing a proviso that "all manufactures of which wool is a component material shall be classified and assessed for duty as manufactures of wool," *held*, that the ordinary rule should be applied that a proviso at the close of an independent paragraph like this should be construed as limiting only what precedes it, and that the words "all manufactures" in the proviso

Digitized by Google

have no broader relation than the same words in the beginning of the paragraph.
—United States v. Walsh, 154 Fed. 770.....83 C. C. A. 472

§ 2. Goods subject to duty, rate, and amount.

The hand-made papers covered by Tariff Act July 24, 1897, c. 11, § 1, Schedule M, par. 401, 30 Stat. 189 [U. S. Comp. St. 1901, p. 1672], enumerating "writing, letter, hand-made, drawing, * * * and typewriter paper," are not only those used as writing papers, but also that suitable for other uses, as hand-made India transfer paper used for making lithographic transfers and in printing.
—Edward Benneche & Bros. v. United States, 153 Fed. 861..... 83 C. C. A. 43

The provision in Tariff Act July 24, 1897, c. 11, § 1, Schedule N, par. 414, 30 Stat. 190 [U. S. Comp. St. 1901, p. 1674], for "button molds," includes articles commercially known as button shanks, consisting of pairs of metal disks so constructed that when a piece of cloth is placed on top of one of the disks, and they are subjected to pressure, a cloth-covered button is produced.
—Hormann, Schutte & Co. v. United States, 153 Fed. 868; United States v. Hormann, Schutte & Co., Id.....83 C. C. A. 50

Tariff Act July 24, 1897, c. 11, § 1, Schedule N, par. 414, 30 Stat. 190 [U. S. Comp. St. 1901, p. 1674], provides that "buttons * * * and button molds * * * shall pay duty at the following rates," and the schedule of rates then prescribed mentions only "buttons." *Held*, that this provision for "buttons" should be construed as though reading "buttons and button molds," and that metal button molds should pay the rate assigned to metal buttons.
—Hormann, Schutte & Co. v. United States, 153 Fed. 868; United States v. Hormann, Schutte & Co., Id.....83 C. C. A. 50

Under Tariff Act July 24, 1897, c. 11, § 1, Schedule L, par. 387, 30 Stat. 186 [U. S. Comp. St. 1901, p. 1669], providing for silk fabrics when "in the gum" and when "boiled off," *held*, that fabrics which on boiling lost from 18 to 27 per cent. in weight were classible under the former, rather than the latter, clause.
—H. Mendelson & Co. v. United States, 154 Fed. 33....83 C. C. A. 145

In proving the character of imported merchandise, it is not essential that actual samples of the importations should be produced. Such proof may be supplied by witnesses familiar with the goods, testifying from their recollection as to the invoice descriptions.
—United States v. Herrmann, 154 Fed. 196; Same v. Saks & Co., Id.; Same v. Leon Rheims Co., Id.....83 C. C. A. 179

Paragraph 661, Tariff Act July 24, 1897, c. 11, § 2, Free List, 30 Stat. 201 [U. S. Comp. St. 1901, p. 1688], enumerating "silk cocoons and silk waste," includes those articles only when not manufactured at all.
—Fawcett v. United States, 154 Fed. 1003.....83 C. C. A. 197

Combed silk that has fallen from or been caught in the machines in which it was undergoing further operations is dutiable under the provision in paragraph 384, Tariff Act July 24, 1897, c. 11, § 1, Schedule L, 30 Stat. 185 [U. S. Comp. St. 1901, p. 1668], for silk not further manufactured than combed, and is not subject to the provision for silk waste in paragraph 661, § 2, Free List, 30 Stat. 201 [U. S. Comp. St. 1901, p. 1688].
—Fawcett v. United States, 154 Fed. 1003.....83 C. C. A. 197

Sweet crackers, known as "wafers and biscuits," in which the proportion of the sweetened centers to the pastry envelopes, is large, but in which flour is used to a substantial extent, are not dutiable either directly or by similitude as "confectionery," under Tariff Act July 24, 1897, c. 11, § 1, Schedule E, par. 212, 30 Stat. 168 [U. S. Comp. St. 1901, p. 1647].
—United States v. Thomas Meadows & Co., 154 Fed. 1005..... 83 C. C. A. 297

Digitized by Google

The term "comfits" in paragraph 263, Tariff Act July 24, 1897, c. 11, § 1, Schedule G, 30 Stat. 171 [U. S. Comp. St. 1901, p. 1651], is practically synonymous with "confections," and includes boiled marrons (chestnuts) preserved in syrup.

—Schall & Co. v. United States, 154 Fed. 1005.....83 C. C. A. 329

Marrons (chestnuts) preserved in syrup are not dutiable as "nuts" under paragraph 272, Tariff Act July 24, 1897, c. 11, § 1, Schedule G, 30 Stat. 172 [U. S. Comp. St. 1901, p. 1652]; nor do they resemble nuts sufficiently to be dutiable at the same rate by virtue of the similitude clause in section 7 of said act, 30 Stat. 205 [U. S. Comp. St. 1901, p. 1693].

—Schall & Co. v. United States, 154 Fed. 1005.....83 C. C. A. 329

§ 3. Entry and appraisal of goods, bonds, and warehouses.

White and colored wools were sold together in the Bagdad market at one price, without any distinction as to color; this being in accord with immemorial practice in that market. *Held*, that in finding "the actual market value * * * in the principal markets of the country whence imported, and in the condition in which such merchandise is there bought and sold for exportation to the United States," under Customs Administrative Act June 10, 1890, c. 407, § 19, 26 Stat. 139 [U. S. Comp. St. 1901, p. 1924], both kinds of wool should be appraised at the same price, in accordance with the manner of purchase, without regard to any difference in value which may attach to each kind in any other country.

—G. Gulbenkian & Co. v. United States, 153 Fed. 858..83 C. C. A. 40

The Board of General Appraisers sustained an importer's protests, directing that the collector should reliquidate the duties at the rates appearing to be applicable "from the invoices, samples, or record," or, in the absence of sufficient data, should reliquidate at the rate of 40 per cent. ad valorem. *Held*, that the terms of this decision did not require the collector to consider data outside of the record made before the Board.

—United States v. Hunter & Witcombe, 153 Fed. 873...83 C. C. A. 55

In determining whether sugar drainings should be classed under a tariff act as "not above fifty-six degrees" by the polariscope, or as "fifty-six degrees and above," *held*, that the rule of de minimis non curat lex does not apply to drainings testing 56.025, so as to require their classification under the former provision as testing 56, by disregarding the fraction of a degree.

—United States v. Lueder, 154 Fed. 1.....83 C. C. A. 131

Under the general authority conferred by section 251, Rev. St. [U. S. Comp. St. 1901, p. 138], the Secretary of the Treasury promulgated regulations for ascertaining the polariscopic test of sugar drainings. *Held* that, where these regulations were substantially followed by the government polariscopists, the findings by those officers are conclusive.

—United States v. Lueder, 154 Fed. 1.....83 C. C. A. 131

As to the rule of U. S. v. China & Japan Trading Co., 71 Fed. 864, 18 C. C. A. 335, that, where an importer fails to appear before the Board of General Appraisers, he may not introduce further evidence in the Circuit Court, on appeal from the Board, under Customs Administrative Act June 10, 1890, c. 407, § 15, 26 Stat. 138 [U. S. Comp. St. 1901, p. 1933], *held*, that that rule does not apply where the importer appeared before the Board and offered some evidence.

—H. Mendelson & Co. v. United States, 154 Fed. 33...83 C. C. A. 145

It was an offer of "evidence" where an importer appeared before the Board of General Appraisers and submitted an affidavit made by a person in a foreign country.

—H. Mendelson & Co. v. United States, 154 Fed. 33...83 C. C. A. 145

Under Customs Administrative Act June 10, 1890, c. 407, § 19, 26 Stat. 139 [U. S. Comp. St. 1901, p. 1925], requiring appraised value to include, besides coverings, etc., "all other costs, charges and expenses incident to placing the merchandise in condition, packed ready for shipment to the United States," an invoice item described as a "converter's commission"

Digitized by Google

was so included. *Held*, that this inclusion was proper, so far as it covered converters' services in having the goods dyed and finished, and in the absence of evidence to the contrary it would be presumed to be correct as to any other elements of the item.
—N. Erlanger, Blumgart & Co. v. United States, 154 Fed. 949..... 83 C. C. A. 463

Customs Administrative Act June 10, 1890, c. 407, § 13, 26 Stat. 136 [U. S. Comp. St. 1901, p. 1932], making decisions of appraising officers final and conclusive, does not prevent inquiry as to whether such officers acted legally; and evidence is admissible to show that items independent of the actual value have been included in the appraised value. Appraisers may not cut off all inquiry into their action by merely stating that an item was added "to make market value."
—N. Erlanger, Blumgart & Co. v. United States, 154 Fed. 949..... 83 C. C. A. 463

§ 4. Payment and collection, refunding, and drawback.
In an action against an importer for unpaid duties, the Circuit Court has ample power to suspend the trial until the importer, by payment of the duties assessed, may put himself in position to try the question as to classification of the goods before the Board of General Appraisers.
—United States v. Tiffany & Co., 153 Fed. 969.....83 C. C. A. 81

§ 5. Violations of customs laws.
Held, that articles in the clothing are "baggage," within the meaning of section 2802, Rev. St. [U. S. Comp. St. 1901, p. 1873], relating to the concealment of dutiable articles "found in the baggage of any person arriving within the United States," and that a package of precious stones found in the pocket of a passenger is forfeitable under said provision.
—Two Hundred and Eighteen and one-half Carats Loose Emeralds v. United States, 154 Fed. 839.....83 C. C. A. 475

DAMAGES.

Compensation for property taken for public use, see "Eminent Domain," § 1.

Damages for particular injuries.

Breach of contract for transportation, see "Carriers," § 1.
Breach of contract to deliver cargo, see "Shipping," § 4.
Infringement of patent, see "Patents," § 5.

§ 1. Measure of damages.
Plaintiff in an action for injuries is entitled to recover only for such future pain and suffering as are reasonably certain to result on account of the injury, as distinguished from pain and suffering that may or are merely probable or likely to result.
—Chicago, M. & St. P. Ry. Co. v. Newsome, 154 Fed. 665..... 83 C. C. A. 422

Upon a breach by a vendor of a covenant to furnish an abstract of title in a contract which grants a time option to purchase land, the measure of damages is the difference between the contract price and the value of the land, and the issue whether or not the vendee would have bought the land if the vendor had furnished the abstract is speculative and immaterial.
—Hampton Stave Co. v. Gardner, 154 Fed. 805.....83 C. C. A. 521

§ 2. Pleading, evidence, and assessment.
In an action for personal injuries, evidence of the condition of the injured member up to the time of trial is admissible.
—Chicago, M. & St. P. Ry. Co. v. Heil, 154 Fed. 626...83 C. C. A. 400

Digitized by Google

DEATH.

Caused by operation of railroad, see "Railroads," § 2.
Liability for death of passenger, see "Carriers," § 1.
Liability for death of servant, see "Master and Servant," §§ 1, 2.

§ 1. Actions for causing death.

The Colorado statute, giving a right of action for wrongful death (Mills' Ann. St. §§ 1508–1510), first, to the husband or wife of the deceased, or, second, to his child or children, or, third, to his father and mother, or the survivor of them, includes among its beneficiaries nonresident aliens having the prescribed relationship to the deceased.

—Patek v. American Smelting & Refining Co., 154 Fed. 190..... 83 C. C. A. 284

In an action for wrongful death, it was shown that deceased was a passenger on a vestibule train on defendant's railroad, and alighted therefrom at night at the town where he resided. The station, town, and the home of deceased were all on the west side of the track, and the doors of the train were opened on that side. On a side track to the eastward of the main track, a freight train was standing waiting for the passenger train to pass. After the latter had gone, the freight started, but a coupling broke, and the cars were separated some 30 feet before the front portion stopped, standing across a private crossing. The conductor and a flagman went back to the caboose with a lantern for a knuckle, walking along the west side of the cars. After the front part of the train had been backed up and coupled, the conductor passed forward to the engine on the same side of the cars, when he discovered the body of the deceased lying near the private crossing, on its back, with the feet to the west, and the head on the west rail, where it had been crushed by the wheels evidently when the cars were backed. There were no other injuries, and the clothing was not disarranged. The side track at the place of the injury was being moved, and the earth had been removed from between the ties, and it was unlighted. *Held*, that such facts would not warrant a finding that the death was due to such condition of the track, where all the evidence tended to show that the case was one of suicide, and, in any event, that deceased was a trespasser and guilty of such contributory negligence as to preclude a recovery.

—Payne v. Illinois Cent. R. Co., 155 Fed. 73.....83 C. C. A. 589

To justify the submission to the jury of a case brought to recover for the death of a person, alleged to have been caused by the negligence of defendant, there must be substantive proof not only of such negligence, but that it brought about the injury.

—Payne v. Illinois Cent. R. Co., 155 Fed. 73.....83 C. C. A. 589

DEBTOR AND CREDITOR.

See "Bankruptcy"; "Fraudulent Conveyances."

DECOY LETTERS.

Use by post office inspectors, see "Post Office," § 1.

DEEDS.

In fraud of creditors, see "Fraudulent Conveyances."

Digitized by Google

DEFAMATION.

See "Libel and Slander."

DEMAND.

For payment of bill or note, see "Bills and Notes," § 1.

DEPOSITIONS.

Allowance of costs of taking in admiralty, see "Admiralty," § 3.

DESCENT AND DISTRIBUTION.

See "Wills."

DETINUE.

See "Replevin."

DEVISES.

See "Wills."

DIRECTING VERDICT.

In civil actions, see "Trial," § 1.

DISCHARGE.

From liability as guarantor, see "Guaranty," § 1.
Of judgment, see "Judgment," § 3.

DISCRETION OF COURT.

Amendment of bill of particulars in United States court, see "Courts," § 3.
Examination of jurors, see "Jury," § 1.
Review in civil actions, see "Appeal and Error," § 8.

DISMISSAL AND NONSUIT.

Dismissal of suit in equity, see "Equity," § 4.

DISORDERLY HOUSE.

An owner of property, or an agent of such owner, who knowingly rents the same to another to be used as a bawdyhouse, the keeping of which is a misdemeanor, aids and abets the commission of the offense, and under Pen. Code Alaska, § 188, which provides that in misdemeanors there are no accessories, is punishable as a principal.
—Rosencranz v. United States, 155 Fed. 38.....83 C. C. A. 634

Although Alaska Pen. Code, § 128, expressly makes common fame competent evidence in support of an indictment for keeping a bawdyhouse for purposes of prostitution, such evidence alone is not sufficient proof to warrant a conviction, but there must be some evidence that the house was in

Digitized by Google

fact kept and used for such purposes. Such evidence need not, however, be direct, but may be circumstantial.
—Botts v. United States, 155 Fed. 50.....83 C. C. A. 646

DISTRIBUTION.

Of estate of bankrupt, see "Bankruptcy," § 3.

DIVERSE CITIZENSHIP.

Ground of jurisdiction of United States courts, see "Courts," § 3; "Removal of Causes," § 1.

DOMICILE.

Of parties as affecting venue, see "Venue," § 1.
Residence as ground of jurisdiction, see "Courts," § 3.

DREDGING.

Action for in admiralty, see "Admiralty," § 2.

DUPLICITY.

In indictment, see "Indictment and Information," § 1.

DUTIES.

Customs duties, see "Customs Duties."

EJECTMENT.

Pendency of other action as ground for abatement, see "Abatement and Revival," § 1.

ELECTION OF REMEDIES.

Against estate of bankrupt, see "Bankruptcy," § 3.

EMBEZZLEMENT.

Of mail matter, see "Post Office," § 1.

EMINENT DOMAIN.

§ 1. **Compensation.**
Lots on a tract of land were conveyed by deeds containing a condition prohibiting their use for certain purposes, such as for the erection and maintenance of any slaughterhouse, smith shop, steam engine or distillery, brewery or saloon, etc., and providing that such condition might be enforced by action by the owner of any other lot on the tract. Certain of such lots were condemned by the United States as a site for a seacoast fortification. *Held*, that these particular conditions did not create a true easement as known to the common law in favor of other lot owners, nor were they in-

Digitized by Google

tended to apply to public works, but merely to restrict what might be done by persons or business corporations in their own interest, and that, under the circumstances the owners of lots not taken had no interest for which they were entitled to compensation.
—Wharton v. United States, 153 Fed. 876.....83 C. C. A. 58

EMPLOYERS' LIABILITY INSURANCE.

See "Insurance," §§ 1, 4, 5, 8.

EMPLOYÉS.

See "Master and Servant."

ENGINEERS.

Approval by of performance of contract, see "Contracts," § 4.

ENTRY.

Of imported goods, see "Customs Duties," § 3.

EQUITY.

Particular subjects of equitable jurisdiction and equitable remedies.

See "Fraudulent Conveyances"; "Injunction"; "Receivers"; "Specific Performance"; "Trusts."
Compelling satisfaction of judgment, see "Judgment," § 3.
Enforcement of attorney's lien, see "Attorney and Client," § 1.
Suits for infringement of patents, see "Patents," § 5.

Review on appeal.

Necessity of bill of exceptions for purpose of review, see "Appeal and Error," § 5.

§ 1. Jurisdiction, principles, and maxims.

Where a federal court of equity acquired jurisdiction of a suit by an administrator with the will annexed, to determine a claim of lien on certain lands belonging to testator and declare the rights of the parties, the court having determined that the title to the land was in the administrator and that the defendants were entitled to a lien under a certain contract, it was not bound to remand the cause to the probate court for the enforcement of such lien by a sale of the land, but could retain jurisdiction until complete justice had been accomplished by a sale of the land and distribution of the proceeds between the administrator and the lienors.
—Quinton v. Neville, 154 Fed. 432.....83 C. C. A. 252

An action at law does not afford an adequate remedy for the breach of a contract to convey real estate or for a failure to execute a trust with which it is charged.
—Rogers v. Penobscot Min. Co., 154 Fed. 606.....83 C. C. A. 380

§ 2. Parties and process.

It is the aim of a court of equity to do complete justice by deciding upon and settling the rights of all persons directly interested in the sub-

Digitized by Google

ject of the suit, and to accomplish this end all persons materially interested in the subject ought generally to be parties to the suit.
—Arkansas Southeastern R. Co. v. Union Sawmill Co., 154 Fed. 304.....83 C. C. A. 224

A suit in equity against a corporation organized to build and operate a logging road for the sole purpose of carrying logs to the mill of a lumber company, and without which it could not operate its mill, to enjoin the construction of such road, the right to relief being based largely upon contracts between complainant and the lumber company and complainant and defendant, which were parts of the same transaction, is one in which the lumber company is directly and vitally interested and to which it is an indispensable party.
—Arkansas Southeastern R. Co. v. Union Sawmill Co., 154 Fed. 304.....83 C. C. A. 224

Under the old chancery rule part owners of a chose in action would be necessary parties to an action upon it. But under the modification of that rule which prevails in the federal courts they are not indispensable parties, and if they are beyond the jurisdiction of the court, or if their presence would oust its jurisdiction over other parties before it, the suit may proceed without them, because a decree which does complete justice between the parties before the court may be rendered without directly and injuriously affecting their interests.
—Rogers v. Penobscot Min. Co., 154 Fed. 606.....83 C. C. A. 380

§ 3. **Pleading.**
A joinder of two causes of action against the same party for the same relief, one against him as an individual and one against him as an officer, does not make a bill multifarious.
—Rogers v. Penobscot Min. Co., 154 Fed. 606.....83 C. C. A. 380

No bill is multifarious which presents a common point of litigation, the decision of which will affect the entire subject-matter and settle the rights of the parties to the suit.
—Rogers v. Penobscot Min. Co., 154 Fed. 606.....83 C. C. A. 380

§ 4. **Dismissal before hearing.**
The failure to make other part owners of a chose in action parties to a suit on it is a curable defect, and it will not sustain a judgment of dismissal of the bill on the merits. The bill should be retained until the complainants have reasonable opportunity to amend it and to bring in such part owners, or to show in their amended bill an excuse for their absence, under the practice in equity in the federal courts.
—Rogers v. Penobscot Min. Co., 154 Fed. 606.....83 C. C. A. 380

ERROR, WRIT OF.

See "Appeal and Error."

ESTABLISHMENT.

Of will, see "Wills," § 1.

ESTOPPEL.

By judgment, see "Judgment," § 2.
To avoid or forfeit insurance policy, see "Insurance," § 5.

EVIDENCE.

As to particular facts or issues.

See "Damages," § 2.
Citizenship, see "Aliens," § 1.

Digitized by Google

In particular civil actions or proceedings.

See "Negligence," § 1.
For causing death, see "Death," § 1.
For hire of dredge, see "Shipping," § 2.
For infringement of patent, see "Patents," § 5.
For personal injuries, see "Master and Servant," § 2.
On insurance policy, see "Insurance," § 8.

In criminal prosecutions.

See "Criminal Law," § 3.
For keeping disorderly house, see "Disorderly House."
For offense against land laws, see "Public Lands," § 1.

Review and procedure thereon in appellate courts.

Harmless error in rulings, see "Appeal and Error," § 8.
Presumptions on appeal or writ of error, see "Appeal and Error," § 8.
Review of evidence in general, see "Appeal and Error," § 8.

§ 1. Judicial notice.

The rule applied that a court is entitled to take judicial notice of its own records, especially where the facts constitute a part of the same litigation.

—Wilson v. Calculagraph Co., 153 Fed. 961.....83 C. C. A. 77

§ 2. Relevancy, materiality, and competency in general.

In an action to recover the purchase price of an engine built and installed by plaintiff in defendant's factory, in which the defense was the failure of the engine to comply with the warranty, evidence of the alleged unsatisfactory work of other engines built by plaintiff for other parties was properly excluded, where it was not shown that they were the same as the engine in suit, or that they were intended for like use or sold under a like warranty.

—Hammerschlag Mfg. Co. v. Struthers-Wells Co., 154 Fed. 326..... 83 C. C. A. 198

§ 3. Opinion evidence.

While it is competent for expert witnesses to enumerate the various causes which might have produced a given effect, and to state what bearing specific facts shown in evidence would have upon the probability or improbability of one or more of such causes being operative at the time and place, it is not competent for them to state an opinion upon all the evidence, as to what cause was in fact operative; that being the final inference to be drawn by the jury.

—Castner Electrolytic Alkali Co. v. Davies, 154 Fed. 938..... 83 C. C. A. 510

EXCEPTIONS.

Necessity for purpose of review, see "Appeal and Error," § 3.

EXCEPTIONS, BILL OF.

Necessity for purpose of review, see "Appeal and Error," § 5.

EXECUTION.

See "Judicial Sales."

EXECUTORS AND ADMINISTRATORS.

See "Wills."
Appearance by, see "Appearance."
Conclusiveness of judgment against administrator, see "Judgment," § 2.

Digitized by Google

Judicial sale of property of decedent's estate in general, see "Judicial Sales."
Testamentary trustees, see "Trusts."

EXEMPTIONS.

Of shipowner from liability, see "Shipping," § 4.

EXPERT TESTIMONY.

In civil actions, see "Evidence," § 8.

EXPLOSIVES.

Harmless error in rulings on evidence as to cause of explosion, see "Appeal and Error," § 8.

FACTORS.

See "Principal and Agent."

FAULT.

Of collision, see "Collision."

FEDERAL COURTS.

See "Courts," § 3.
Pendency of action in state court as ground for abatement of action in federal court, see "Abatement and Revival," § 1.

FEDERAL QUESTIONS.

Grounds for jurisdiction, see "Courts," § 3.

FELLOW SERVANTS.

See "Master and Servant," § 1.

FINAL JUDGMENT.

Appealability, see "Appeal and Error," § 1.

FINDINGS.

Review on appeal or writ of error, see "Appeal and Error," § 8.
Special findings by jury, see "Trial," § 2.

FIRE INSURANCE.

See "Insurance," § 3.

FOREIGN CORPORATIONS.

See "Corporations," § 5.

Digitized by Google

FORFEITURES.

For concealment of dutiable articles, see "Customs Duties," § 5.
Of insurance, see "Insurance," §§ 4, 5.

FORMER ADJUDICATION.

See "Judgment," § 2.

FORMS OF ACTION.

See "Replevin"; "Trover and Conversion."

FRAUD.

See "Fraudulent Conveyances."
As ground for vacation of judgment, see "Judgment," § 1.
Use of mails to defraud, see "Post Office," § 1.

FRAUDS, STATUTE OF.

§ 1. **Pleading, evidence, trial, and review.**
Where a writing is indispensable to a valid contract, a pleading of a contract which does not affirmatively disclose that it was made by parol is a pleading of a written agreement.
—Rogers v. Penobscot Min. Co., 154 Fed. 606.....83 C. C. A. 380

FRAUDULENT CONVEYANCES.

By bankrupt, see "Bankruptcy," § 3.

§ 1. **Transfers and transactions invalid.**
A voluntary conveyance by a solvent father to his child is not necessarily voidable by his existing creditors, and it is valid against subsequent creditors in the absence of evidence that it was made with intent to defraud them.
If the provision be reasonable, if it leave in the hands of the grantor ample property to pay his existing debts, and if there be no intent to defraud existing or subsequent creditors, it may be sustained.
—Hessian v. Patten, 154 Fed. 829.....83 C. C. A. 545
The want of consideration is only a circumstance insufficient in itself to prove a fraudulent intent, but from which and other circumstances such an intent may be inferred.
—Hessian v. Patten, 154 Fed. 829.....83 C. C. A. 545
A voluntary conveyance by an insolvent grantor is fraudulent in itself because it cannot be made without hindering and defrauding his creditors.
—Hessian v. Patten, 154 Fed. 829.....83 C. C. A. 545
The rule that a conveyance in trust for the use of the person making the same is voidable by creditors of the grantor is inapplicable to a deed which is made primarily and principally for the use of the grantee, and in which the reservation for the grantor is secondary and partial, as in the case of a conveyance by an aged man of a lot and building worth $9,000 and a reservation in the deed of possession of the property during his life.
—Hessian v. Patten, 154 Fed. 829.....83 C. C. A. 545

Digitized by Google

FUTURES.

Gambling transactions, see "Gaming," § 1.

GAMING.

Jurisdiction of United States court, see "Criminal Law," § 2.

§ 1. **Gambling contracts and transactions.**
It was no defense to a note given to plaintiffs for balance due them on certain transactions in the purchase and sale of cotton for future delivery in accordance with the rules of the New York Cotton Exchange that the transactions were mere gambling contracts and that the note was given to secure losses, in the absence of proof that plaintiffs had knowledge of defendant's intention during such transactions, if such intention existed, not to receive the cotton purchased by plaintiffs for them under the contracts nor to deliver that sold on the maturity of the contracts.
—Springs & Co. v. Carpenter, 154 Fed. 487.....83 C. C. A. 327

GAS.

Mingling gas from gas wells, see "Confusion of Goods," § 1.

GENERAL APPRAISERS.

Boards of, see "Customs Duties," §§ 3, 4.

GRAND JURY.

See "Indictment and Information."

GRANTS.

Of public lands, see "Public Lands."

GUARANTY.

§ 1. **Discharge of guarantor.**
A contract employing defendant's son as plaintiff's broker, which was signed by defendant as guarantor, required that the son should give a fidelity bond in such sum, and with such company as surety, as plaintiff should designate; plaintiff to pay the premium. Plaintiff sent the son a blank application for a bond, in a company selected by it, which he properly executed and returned to plaintiff, but the latter failed to obtain the bond until after the son's defalcation. *Held*, that such bond was for the security of both plaintiff and the guarantor, and that plaintiff's failure to obtain the same discharged defendant from liability on the guaranty.
—Swift & Co. v. Ruffin, 154 Fed. 1005.....83 C. C. A. 243

HABEAS CORPUS.

§ 1. **Jurisdiction, proceedings, and relief.**
Under Rev. St. §§ 763, 764 [U. S. Comp. St. 1901, pp. 594, 595], authorizing an appeal from the final decision upon an application for a writ

Digitized by Google

of habeas corpus or upon such writ when issued, a final order of the Circuit Court denying petitioner's application for discharge on a writ of habeas corpus cannot be reviewed by the Circuit Court of Appeals on a writ of error, but only on an appeal.
—Rainbow v. Young, 154 Fed. 489.....83 C. C. A. 421

HARMLESS ERROR.

In civil actions, see "Appeal and Error," § 8.

HIGHWAYS.

See "Municipal Corporations," § 2; "Navigable Waters," § 1.

IMPORTS.

Duties, see "Customs Duties."

IMPRISONMENT.

Habeas corpus, see "Habeas Corpus."

INCLOSURE.

Of public land, see "Public Lands," § 1.

INDEMNITY.

See "Guaranty."

INDEMNITY INSURANCE.

See "Insurance," § 1.

INDIANS.

Review of order relating to Indian land as dependent on finality of determination, see "Appeal and Error," § 1.

Leases of allotments of Indian minors in the Indian Territory, confirmed and approved by the trial courts of that territory since April 26, 1906, are not subject to the approval or disapproval of the Secretary of the Interior, but the orders of the courts confirming and approving them are final.
—Morrison v. Burnette, 154 Fed. 617.....83 C. C. A. 391

INDICTMENT AND INFORMATION.

For offenses against postal laws, see "Post Office," § 1.

§ 1. **Joinder of parties, offenses, and counts, duplicity, and election.** Averments in an indictment that artifices used in furtherance of a scheme to defraud, to be carried on through the use of the mails, were intended to give one understanding of the scheme to one class of in-

Digitized by Google

vestors and another and different understanding to a different class, both being deceived and defrauded by the same artifices, do not make out two separate schemes so as to render the indictment bad for duplicity.
—Gourdain v. United States, 154 Fed. 453.....83 C. C. A. 309

INFRINGEMENT.

Of patent, see "Patents," § 5.
Of trade-mark, see "Trade-Marks and Trade-Names," § 1.

INJUNCTION.

Necessary parties in suit for, see "Equity," § 2.
Restraining proceedings in United States courts, see "Courts," § 4.
Restraining use of patented devices, see "Patents," § 4.
Review of discretionary rulings, see "Appeal and Error," § 8.

§ 1. Violation and punishment.

A decree of a federal court foreclosing mortgages on the property of corporation and directing a sale thereof, after determining the rights and priorities of the parties under mortgages given by successive owners provided that the purchaser at the sale should hold the property free and discharged from the lien of all the mortgages and free from all claims of every kind or nature of any of the parties or those claiming under them; also, after reserving certain questions for future disposition it provided that "jurisdiction of this cause is retained in this court for the purpose of determining all such reserved questions and of enforcing the conditions of this decree and of any further order made herein, and any party to this proceeding may apply to the court for further orders and directions at the foot of this decree." A sale was made, and certain dissatisfied bondholders under one of the mortgages, who were not parties to the suit, except by representation by the trustee in the mortgage, appeared individually and objected to its confirmation. Their objections were overruled and the sale confirmed by an order, which, inter alia, prohibited and enjoined all parties to the suit and all persons claiming through or under them, their attorneys, solicitors, etc., "from setting up any pretended or alleged title against the title of the purchasers." Such dissatisfied bondholders, having been denied an appeal on the ground that they were not parties, filed a bill in a state court against the purchasers and others, praying for a foreclosure of their mortgage, whereupon their solicitor was cited into the federal court on petition of the purchasers and adjudged in contempt for violation of its injunction in instituting such suit. *Held*, that the injunctional provision of the order of confirmation was not within the power reserved by the court by the decree to enforce its conditions, and, not being within any issue in the suit, was without jurisdiction and void as against the individual bondholders, or their counsel, who were not parties in any sense which would confer jurisdiction over their persons, to make such order binding upon them and to deprive them of their right to a hearing on their alleged individual rights in any court of competent jurisdiction; and that it afforded no basis for the proceedings in contempt.
—Lewis v. Peck, 154 Fed. 273.....83 C. C. A. 211

INSOLVENCY.

See "Bankruptcy."
Of fraudulent grantor, see "Fraudulent Conveyances," § 1.
Of national bank, see "Banks and Banking," § 1.

Digitized by Google

INSURANCE.

Evidence of custom in action on policy, see "Customs and Usages."
Harmless error in action on indemnity bond, see "Appeal and Error," § 8.
Rights of guarantor under fidelity bond, see "Guaranty," § 1.
Scope and extent of review in action on fidelity bond, see "Appeal and Error," § 8.

§ 1. The contract in general.

Where a fire policy insuring property in Virginia was executed, accepted, and delivered in New York by a company not authorized to do business in Virginia and having no agent there, it was not affected by Va. Code 1904, p. 630, § 1296a, providing that fire insurance companies not incorporated by the laws of the state, but legally authorized to do business therein, shall not make contracts of insurance on property in Virginia, save through regularly constituted agents residing within the state.

—Globe & Rutgers Fire Ins. Co. of New York v. David Moffat Co., 154 Fed. 13.....83 C. C. A. 91

Where a New York insurance policy was issued on property located in Virginia, and provided that it should expire "at noon" on a certain day, the contract, being performable in Virginia, was not governed by Laws N. Y. 1892, p. 1491, c. 677, § 28, providing that an act required to be performed within a specified time should be performed according to standard time.

—Globe & Rutgers Fire Ins. Co. of New York v. David Moffat Co., 154 Fed. 13.....83 C. C. A. 91

Where insured prepared an elaborate rider describing the property intended to be covered, which was attached to the policy, such rider should not be expanded as against the insurer beyond its plain and ordinary meaning, on the theory that the policy should be interpreted against the insurer.

—Globe & Rutgers Fire Ins. Co. of New York v. David Moffat Co., 154 Fed. 13.....83 C. C. A. 91

Plaintiff tanning company prepared an elaborate rider to be attached to its insurance policies, attempting to specify every species of property for which insurance was desired on plaintiff's premises, which rider referred to a plan of the premises on file in the office of plaintiff's insurance broker. The rider attached to the policy in question provided no insurance on "bark ground and unground" contained in the building marked "3" on the plan, nor on bark and liquors in the leach house and coolers marked "2" on the plan, or on bark and liquors contained in a leach house marked "16," nor on the bark sheds on the tannery premises marked "8" on the plan, but $10,000 on "bark in piles and under sheds on the tannery premises marked 8 on the plan." *Held*, that the policy should be construed to include bark in piles on that part of the tannery premises marked "8," and did not include a bark pile in a square plot on the premises not so marked, but in proximity to a bark shed.

—Globe & Rutgers Fire Ins. Co. of New York v. David Moffat Co., 154 Fed. 13.....83 C. C. A. 91

An employer's liability bond is essentially a contract of indemnity against loss, governed by the rules applicable to ordinary life and fire insurance policies.

—Ætna Indemnity Co. v. J. R. Crowe Coal & Mining Co., 154 Fed. 545.....83 C. C. A. 431

An application for insurance is a proposition to the insurance company which must be accepted as made, if at all.

—Ætna Indemnity Co. v. J. R. Crowe Coal & Mining Co., 154 Fed. 545.....83 C. C. A. 431

Digitized by Google

Where there is doubt and uncertainty concerning the effect of correspondence on an employer's liability bond, such doubt should be resolved in favor of sustaining the contract as executed in favor of the insured.

—Ætna Indemnity Co. v. J. R. Crowe Coal & Mining Co., 154 Fed. 545.....83 C. C. A. 431

§ 2. Cancellation, surrender, abandonment, or rescission of policy.

Where an assessment life insurance company and a policy holder differed as to the construction of the contract, and the company made an assessment which the policy holder thought excessive and refused to pay, but tendered a smaller sum, his action was an election to stand on the contract as still in force, which election was final; and he could not afterward maintain an action in disaffirmance of the contract on the ground that the act of the company in making the assessment was an anticipatory breach.

—Blakely v. Fidelity Mut. Life Ins. Co., 154 Fed. 43..83 C. C. A. 155

Under the law of New York the wrongful refusal of a life insurance company to receive premiums on a policy which are due by its terms and to continue the policy in force is a breach of the contract which entitles the policy holder to maintain an action to recover damages therefor.

—Michaelsen v. Security Mut. Life Ins. Co., 154 Fed. 356..... 83 C. C. A. 334

§ 3. Avoidance of policy for misrepresentation, fraud, or breach of warranty or condition.

A single standard form of fire insurance policy adopted by a state cannot be construed as intended for use only in the insurance of real property alone or personalty alone, but may be used for the joint insurance of both, and, where so used, a provision that it shall be void, "if the subject of insurance be personal property and be or become incumbered by a chattel mortgage," applies and renders it void as to both realty and personalty, where there were chattel mortgages on the personalty covered thereby when it was issued, which fact was not disclosed to the insurer.

—Fries-Breslin Co. v. Star Fire Ins. Co., 154 Fed. 35..83 C. C. A. 147

§ 4. Forfeiture of policy for breach of promissory warranty, covenant, or condition subsequent.

An original employer's liability bond was issued in 1901, insuring plaintiff against the employé's misconduct for a year. It was renewed for a new consideration for the succeeding year, and again for the years 1903 and 1904; the renewal reciting that it was made in consideration of $20 premium, and continued the bond in force to June 1, 1904, "subject to all the covenants and conditions thereof." *Held*, that the renewal did not include a statement issued February 24, 1903, in which plaintiff represented that checks signed by the insured employé should be safeguarded by certain other signatures, so that a failure to perform such representation did not relieve defendant from liability on the bond.

—Ætna Indemnity Co. v. J. R. Crowe Coal & Mining Co., 154 Fed. 545.....83 C. C. A. 431

An employer's liability bond provided that the insurer should indemnify the employer against fraudulent or dishonest acts of the employé amounting to embezzlement or larceny, subject to the condition that the insurer should be notified in writing of any fraudulent or dishonest act on the part of the employé which might involve a loss for which the company was responsible, immediately after the occurrence of such act should have come to the employer's knowledge. *Held*, that the notice required was one which would charge the employé with the commission of a felony, and hence the employer was not bound to give such notice until it had acquired knowledge sufficient to justify a reasonable man in making such a charge.

—Ætna Indemnity Co. v. J. R. Crowe Coal & Mining Co., 154 Fed. 545.....83 C. C. A. 431

Digitized by Google

Digitized by Google

In an action to recover for the death of an insured under an accident policy or certificate which provided that the insurer should be liable for death only in case it resulted alone from bodily injuries received through external, violent, and accidental means, the plaintiff was not entitled to recover where the sole evidence relating to the receipt of any accidental injury by the deceased was testimony showing that some three months prior to his death there was a discolored spot on one of his shins, several inches in extent, which might have been caused by a bruise or an abrasion.
—National Ass'n of Ry. Postal Clerks v. Scott, 155 Fed. 92..... 83 C. C. A. 652

To warrant a recovery on an accident policy insuring against death only when it results alone from an accidental injury, the plaintiff must establish two fundamental propositions: First, that there was an accidental injury; and, second, that it alone caused the death.
—National Ass'n of Ry. Postal Clerks v. Scott, 155 Fed. 92..... 83 C. C. A. 652

INTENT.

Fraudulent, see "Fraudulent Conveyances," § 1.

INTEREST.

Rights of parties to joint adventure, see "Joint Adventures."

§ 1. Time and computation.
Where a railroad bridge construction contract was made in Missouri for performance in Mexico, and suit for an accounting was brought thereon in Maryland, where funds of the railroad were attached, the contractor was entitled to recover interest on the balance due from the date of demand or suit brought, under Rev. St. Mo. 1899, § 3705 [Ann. St. 1906, p. 2073], declaring that creditors shall be allowed interest at 6 per cent., when no other rate is agreed on, for all moneys after they become due and payable on written contracts and on accounts after maturity and demand made.
—Freygang v. Vera Cruz & P. R. Co., 154 Fed. 640; Vera Cruz & P. R. Co. v. Freygang, Id.....83 C. C. A. 414

INTERLOCUTORY JUDGMENT.

Appealability, see "Appeal and Error," § 1.
Review on appeal or writ of error, see "Appeal and Error," § 8.

INTERNATIONAL LAW.

See "Aliens."

INTERROGATORIES.

To jury, see "Trial," § 2.

INVENTION.

See "Patents."

ISSUES.

In civil actions, see "Pleading," § 2.
Presented for review on appeal, see "Appeal and Error," § 3.

Digitized by Google

JOINDER.

Of offenses in indictment, see "Indictment and Information," § 1.
Of parties in civil actions, see "Parties," § 1.

JOINT ADVENTURES.

Defendant's testator, having purchased a quantity of wild land for $26,076.60, contracted with B., plaintiff's assignor, for the sale thereof as follows: That, in case B. totally failed to make sales during the first five years, the arrangement should terminate; that if there was a partial failure to reimburse testator at the end of 10 years to the amount of his investment, with 10 per cent. annual interest, the arrangement should be terminated, and B. should receive 5 per cent. commission on sales made; and, if at the end of the 10 years testator should have been so reimbursed, B. should have one-half of the profits. At the end of the 10-year period there remained unsold 6,445 acres of land, and there was a net deficit of over $17,000 before testator's investment would be made good, of which more than $11,000 was in outstanding notes with accrued interest, and more than $6,000 was represented merely by unsold lands. *Held*, that such facts showed the happening of the conditions required by the second provision of the contract, and that the same terminated at the end of the 10 years, B. being entitled only to 5 per cent. commission on sales made up to that time.
—Corbin v. Holmes, 154 Fed. 593; Holmes v. Corbin, Id..... 83 C. C. A. 367

Testator, having purchased certain land, agreed with B. that the latter should manage the sale thereof for 10 years, and in case sufficient sales were not made within that time to reimburse testator for his outlay, with 10 per cent. interest, B. was to receive 5 per cent. commissions on sales made, and, if the receipts were sufficient so to reimburse testator, B. should receive one-half of the profits. *Held*, that on termination of the contract period testator was entitled to be credited with interest at 10 per cent. on his investment, together with disbursements for taxes, foreclosure expenses, expenses for recording mortgages, etc., and should be charged with interest at 10 per cent. on all receipts.
—Corbin v. Holmes, 154 Fed. 593; Holmes v. Corbin, Id..... 83 C. C. A. 367

B. did not acquire any interest in or lien on the lands under the contract, and was therefore not entitled to require a sale by process of court or otherwise, in order to repay testator's investment and to wind up the joint account.
—Corbin v. Holmes, 154 Fed. 593; Holmes v. Corbin, Id..... 83 C. C. A. 367

JUDGES.

See "Courts."

JUDGMENT.

Appearance in action to review, see "Appearance."
Decisions of courts in general, see "Courts," § 2.
Review in general, see "Appeal and Error."
Sales under judgment, see "Judicial Sales."
Scire facias to revive judgment in United States court, see "Courts," § 3.

§ 1. Opening or vacating.
A court of equity has power to vacate its own decree at any time during the term at which it was entered on the ground that it was procured by

Digitized by Google

means of the perjured testimony of the prevailing party, notwithstanding the fact that it has been affirmed on appeal; but in the absence of a statute conferring it, such power does not extend beyond the term. In such case, fraud to confer jurisdiction must consist in something extrinsic or outside of the matter which was actually tried or so in issue that it could have been tried in the suit in which the decree assailed was entered.

—Nelson v. Meehan, 155 Fed. 1.....83 C. C. A. 597

Alaska Code Civ. Proc. § 93, which authorizes a district court to relieve a party from a judgment taken against him through his mistake, inadvertence, surprise, or excusable neglect, does not confer power to vacate a judgment after the term on the ground that the issues were erroneously decided because of perjured testimony, the motion being based on affidavits going to the identical issues tried before.

—Nelson v. Meehan, 155 Fed. 1.....83 C. C. A. 597

§ 2. Conclusiveness of adjudication.

A judgment of a state court against a foreign administrator, subjecting land of his intestate's estate to an attachment, which is conclusive as against him, is also conclusive as against a local administrator subsequently appointed, and a bar to an action brought by him to recover the land from a purchaser under the former judgment in which the same issues only are involved.

—Benker v. Meyer, 154 Fed. 290.....83 C. C. A. 270

Where, after certain wool in controversy had been sold and delivered to the buyer's agent and by him loaded on the cars of a railroad company, the seller resold the wool to a bank, and the latter brought replevin against the agent and the railroad company, to which the buyer was not a party, the judgment in such replevin suit was not res judicata against the buyer's right to recover against the bank for conversion of the wool.

—Northwestern State Bank of Hay Springs, Neb., v. Silberman, 154 Fed. 809.....83 C. C. A. 525

§ 3. Payment, satisfaction, merger, and discharge.

A court of equity is without jurisdiction of a suit for a decree requiring the entry of satisfaction of a judgment at law, the court which rendered such judgment having full power over it, and to grant any relief in respect thereto which justice may require.

—Macrum v. United States, 154 Fed. 653.....83 C. C. A. 427

JUDICIAL NOTICE.

In civil actions, see "Evidence," § 1.

JUDICIAL SALES.

Where an order appointing a clerk of the Circuit Court of the United States special master to conduct a judicial sale of certain land under a decree of the Circuit Court is erroneous in not specifying special reasons for making such appointment, the error will not affect the balance of the sale decree as it is amendable in that respect.

—Quinton v. Neville, 154 Fed. 432.....83 C. C. A. 252

Where a lien was imposed on the excess of the proceeds of a sale of land belonging to an administrator with the will annexed, over $60,000, the owners of the lien could not object to a provision in the sale decree requiring each bidder as evidence of good faith to deposit 20 per cent. of the amount of his accepted bid, to be forfeited and applied to the costs if the bid was not made good, the commissioner being authorized to accept the receipt of the administrator in lieu of cash in case he became the purchaser at the sale.

—Quinton v. Neville, 154 Fed. 432.....83 C. C. A. 252

Digitized by Google

Where an order appointing a clerk of the Circuit Court of the United States special master to conduct a judicial sale of certain land under a decree of the Circuit Court did not specify special reasons therefor, the order was erroneous to that extent, under Act Cong. March 3, 1879, c. 183, 20 Stat. 415 [U. S. Comp. St. 1901, p. 591], prohibiting the appointment of any clerk of a District or Circuit Court of the United States or their deputies as receiver or master in any case, except where the judge shall determine that a special reason exists therefor, to be assigned in the order of appointment.
—Quinton v. Neville, 154 Fed. 432.....83 C. C. A. 252

Gen. St. Kan. 1901, § 3012, provides that where it is made to appear by any executor or administrator that any lands of the estate, lying near an incorporated town or city would be materially advanced in value by being platted into town and city lots, the court may order the executor or administrator to subdivide and plat the land. Section 3013 requires the order directing such plat to be made on petition of the executor or administrator, to be accompanied by an accurate plat of the proposed subdivision; and section 3014 requires the executor or administrator, on receipt of the order, to acknowledge and file the plat as an addition to the city, and that no sale of any part of such real estate shall be ordered by the probate court until the plat has been acknowledged and filed. *Held*, that where an administrator with the will annexed sued to have an alleged lien of the defendants on property adjoining a city declared, and the land sold, it was a proper exercise of the court's discretion to refuse, without the consent of the administrator, to direct that the property be platted into a city subdivision, before sale, under such sections, and to require that the land be surveyed and subdivided into parcels containing not less than 5 nor more than 10 acres.
—Quinton v. Neville, 154 Fed. 432.....83 C. C. A. 252

A successful bidder under an order or decree of court at a sale which is subject to confirmation by the court is a purchaser from the announcement of the sale to him by the officer, and may thereafter be compelled to complete his purchase.
—Morrison v. Burnette, 154 Fed. 617.....83 C. C. A. 391

After confirmation of a judicial sale the rights of the purchaser have vested. Neither inadequacy of price, nor offers of higher prices, nor anything but fraud, mistake, accident, or some other cause for which equity would avoid a like sale between private parties, will warrant a court in avoiding the sale or in opening it for other bids.
—Morrison v. Burnette, 154 Fed. 617.....83 C. C. A. 391

The general rule that the courts have power over their judgments, decrees, and orders during the term at which they are rendered does not give them jurisdiction to avoid confirmed judicial sales without cause at the term at which they are confirmed, because the rights of purchasers vest thereunder upon confirmation.

The only effect of this rule on such sales is to enable the courts to consider alleged causes for avoiding them during the term on motions or orders to show cause upon due notice, without the filing of formal bills for that purpose.
—Morrison v. Burnette, 154 Fed. 617.....83 C. C. A. 391

Before confirmation a sale will not be set aside for mere inadequacy of price, unless it is very great; yet, if the inadequacy be great, slight circumstances of unfairness in the conduct of the party benefited will be sufficient to open it for farther bids.
—Morrison v. Burnette, 154 Fed. 617.....83 C. C. A. 391

JURISDICTION.

Amount in controversy, see "Courts," § 3.
Effect of appearance, see "Appearance."

Digitized by Google

Jurisdiction of particular actions or proceedings.

See "Habeas Corpus," § 1.
Criminal prosecutions, see "Criminal Law," § 2.
Probate proceedings, see "Wills," § 1.
To set aside transfer by bankrupt, see "Bankruptcy," § 3.

Special jurisdictions and jurisdictions of particular classes of courts.

See "Admiralty," § 1; "Equity," § 1.
Particular courts, see "Courts."

JURY.

Right to jury trial in bankruptcy proceedings, see "Bankruptcy," § 2.
Taking case or question from jury at trial, see "Trial," § 1.
Verdict in civil actions, see "Trial," § 2.

§ 1. Competency of jurors, challenges, and objections.

The examination of jurors on their voir dire in a criminal case *held* to have disclosed such a state of mind on their part as to render the overruling of challenges by defendant for actual bias an abuse of discretion, where each disclosed that he had a fixed opinion that the defendant was guilty, and, while one thought he could lay his opinion aside "if the evidence showed he was not guilty," another stated that his was a strong opinion which he would not be able to rid himself of.

—Rosencranz v. United States, 155 Fed. 38.....83 C. C. A. 634

LACHES.

In proceedings for probate, see "Wills," § 1.

LANDLORD AND TENANT.

Lease of Indian allotments, see "Indians."

LANDS.

See "Public Lands."

LAW OF THE CASE.

Decision on appeal, see "Appeal and Error," § 8.

LEGACIES.

See "Wills."

LETTERS.

Decoy letters, see "Post Office," § 1.

LETTERS PATENT.

For inventions, see "Patents."

Digitized by Google

LIBEL AND SLANDER.

§ 1. Words and acts actionable, and liability therefor.

The publication by a newspaper of an advertisement containing a portrait of a woman, together with a statement calculated to convey the impression that she is a nurse, and had personally used, and as a nurse had recommended the use of, a certain brand of whisky as a tonic, does not constitute a libel per se.
—Peck v. Tribune Co., 154 Fed. 330.....83 C. C. A. 202

§ 2. Actions.

Where, in an action for libel alleged to consist of a statement made to the President concerning the purchase of plaintiff's typesetting machines by the public printer, the only averment of special damages, in a count setting out defamatory statements respecting the quality and value of plaintiff's machines, consisted of expenses incurred by plaintiff in appearing at a hearing before a commission appointed by the President to investigate the matters charged by defendant against the public printer, which expenses plaintiff was under no obligation to incur, such damages were insufficient to sustain the action under such count.
—Lanston Monotype Mach. Co. v. Merganthaler Linotype Co., 154 Fed. 42.....83 C. C. A. 154

Where a count for libel did not contain any averment of special damages, defamatory statements alleged respecting the quality and value of plaintiff's machines were insufficient to constitute a cause of action.
—Lanston Monotype Mach. Co. v. Merganthaler Linotype Co., 154 Fed. 42.....83 C. C. A. 154

The publication, by a newspaper, of an advertisement containing a portrait of a woman, together with a statement calculated to convey the impression that she is a nurse and had personally used, and as a nurse had recommended the use of, a certain brand of whisky as a tonic, in the absence of allegation of special damages, will not support an action for a libel.
—Peck v. Tribune Co., 154 F. 330.....83 C. C. A. 202

LICENSES.

For making, use, or sale of patented articles, see "Patents," § 4.
Injuries to licensees, see "Railroads," § 2.

LIENS.

Enforcement of in admiralty, see "Admiralty," § 1.
For repairs on vessel as dependent on authority of agent directing them to be made, see "Shipping," § 3.
Jurisdiction of equity to determine, see "Equity," § 1.

Particular classes of liens.

See "Chattel Mortgages," § 1.
Attorney's lien, see "Attorney and Client," § 1.
Railroad liens, see "Railroads," § 1.
Vendor's lien on lands sold, see "Vendor and Purchaser," § 1.

LIFE INSURANCE.

See "Insurance," § 2.

Digitized by Google

LIGHTS.

Of vessels, see "Collision," § 5.

LIMITATION OF ACTIONS.

Probate proceedings, see "Wills," § 1.

LIMITATION OF LIABILITY.

Of owner of vessel, see "Shipping," § 5.

LIS PENDENS.

Pendency of other action ground for abatement, see "Abatement and Revival," § 1.

LITERARY PROPERTY.

See "Copyrights."

LONGSHOREMEN.

Liability for injuries to, see "Master and Servant," § 1.

LOOKOUT.

On vessels, see "Collision," §§ 3, 5, 6.

MANUFACTURES.

Manufacture of patented machine as monopoly, see "Monopolies," § 1.

MARINE INSURANCE.

See "Insurance," § 7.

MASTER AND SERVANT.

Employers' liability insurance, see "Insurance," §§ 4, 5, 8.
Employés of vessel, see "Seamen."
Harmless error in action on indemnity bond, see "Appeal and Error," § 8.
Scope and extent of review in action on fidelity bond, see "Appeal and Error," § 8.

§ 1. **Master's liability for injuries to servant.**
Under the modern rule of the federal courts the theory of vice principal as determining the liability of a master to a servant for the negligence of another employé has been largely discarded, and the distinction between negligence which is to be imputed to the master and that which is to be considered as merely and solely the negligence of a fellow servant turns rather on the character of the act than on the relation of the employés to each other.
—Peters v. George, 154 Fed. 634.....83 C. C. A. 408

Digitized by Google

The duty to warn and instruct an employé who is set to perform a dangerous work with which he is unacquainted is a primary and absolute duty of the master to the servant, and he cannot relieve himself of liability for its nonperformance by delegating or intrusting it to a subordinate or to a fellow servant of such workman. Nothing short of actual notice of the danger to the workman who is to encounter it, with such cautionary explanation as may enable him to avoid it, will satisfy the requirement of the law, and the default of an intermediary, whether he be the highest officer in control or merely a fellow workman of the one exposed to the danger, is the default of the master.
—Peters v. George, 154 Fed. 634.....83 C. C. A. 408

Plaintiff was employed by defendant as a common laborer in an open slate quarry, working under a gang boss, chiefly about the hoisting engine, in loading boxes, etc. He was not an experienced quarryman, and had never had anything to do with blasting. Three blasts had been put in, and after all the men had gone up out of the quarry an attempt was made to explode them by electricity, which failed. Some of the men with the gang boss then went down, and the boss set plaintiff to dig the tamping out of one of the holes with a crowbar, and while so engaged the blast exploded and he was injured. Plaintiff had never done such work, and the evidence showed that it had never before been done in the quarry while he was employed there. He was given no warning of the danger, and no instruction except to pour water in the hole as he worked. There was expert testimony that the drilling out of unexploded charges was highly dangerous and in the proper conduct of the work should never be done, and also testimony that it was contrary to the orders of defendant's superintendent, but such orders were not shown to have been known by plaintiff. *Held*, that the question of defendant's liability for the injury was properly submitted to the jury.
—Peters v. George, 154 Fed. 634.....83 C. C. A. 408

Under the New York Employer's Liability Act, Laws 1902, p. 1748, c. 600, which makes an employer liable for the negligence of any person in his service "intrusted with and exercising superintendence, whose sole or principal duty is that of superintendence," the owner of a factory is liable for the death of an employé caused by the negligence of a foreman whose sole duty was to superintend the work of a shift of men under him, make out reports, and to have charge of the appliances in the rooms in which they worked.
—Castner Electrolytic Alkali Co. v. Davies, 154 Fed. 938.....
83 C. C. A. 510

The rule of the maritime law that a vessel is not liable in rem for an injury to a seaman through the negligence of the owner or master does not apply to the case of a longshoreman who is employed by the owner of a vessel to work thereon and is injured through being given an unsafe place to work; such case being governed by the ordinary rules relating to master and servant.
—The Buffalo, 154 Fed. 815.....83 C. C. A. 531

Libelant was a longshoreman employed in shoveling ore at the docks, and was sent by his employer, with others, on the employer's scow to assist in lightening an ore steamer which had gone aground. After the steamer had been floated the scow proceeded to retransfer the ore which had been taken out, and libelant and others were sent on the scow to shovel ore into the buckets. These were moved by a hoist or derrick mounted on a revolving platform, which also could be moved on tracks the length of the scow. The work of reloading was commenced in the night, and libelant had never worked on the scow before, or on any one having such fore and aft movement of the derrick, and he was given no warning or instructions. While he was resting on his shovel after he had filled a bucket and it had swung away from him, the derrick was moved along the rails, he was struck from behind, and, throwing out his arm to save himself, it was run over and crushed. *Held*, that the injury was not due to the negligence of a fellow servant, it not appearing that

Digitized by Google

the engineer operating the hoist was negligent, but to the failure of the master to warn libelant of the danger from the movement of the derrick, which rendered the place where he was set to work dangerous.
—The Buffalo, 154 Fed. 815.....83 C. C. A. 531

The Ohio fellow servant act of April 2, 1890 (87 Ohio Laws, p. 150), providing that, in an action for injuries to a railroad employé, it shall be no defense that the injury was caused by the negligence or default of a fellow servant, is a valid law under the Constitution of Ohio, and is not repugnant to the fourteenth amendment of the federal Constitution.
—Erie R. Co. v. Kane, 155 Fed. 118.....83 C. C. A. 564

To defeat recovery for an injury to a servant by the defense of assumption of risk, the master must show not only that the servant knew of the negligence of which he complains, but that he knew and understood, or ought to have known and appreciated, the increased danger to which he voluntarily exposed himself by reason of such negligence.
—National Steel Co. v. Hore, 155 Fed. 62.....83 C. C. A. 578

Plaintiff's intestate, who was a bridge foreman on defendant's railroad, living at the time in an outfit car on a siding, went with his family on a velocipede car one afternoon to a spur track some 2½ miles distant, near which his father-in-law resided. The car was returned, and in the evening about 7 o'clock some of the men by his direction came after him with a hand car. He was then at his father-in-law's house, where he had been visiting since 5 o'clock, by which time his business for the defendant at the spur, if any, had been finished. About 8:30 he started back with the men, having no light on the car, and while on the way was killed in a collision with a meeting special train. *Held*, that at the time he was engaged on his own private affairs, and no relation of master and servant existed between him and defendant which brought him within the terms of a state statute making railroad companies liable for injuries to their employés caused by negligence of their fellow servants.
—Russell v. Oregon Short Line R. Co., 155 Fed. 22.....83 C. C. A. 618

The duty of caring for the safety of a place or of appliances in cases in which the work which the servants are employed to do necessarily changes the character of the place or of the appliances as to safety as the work progresses is the duty of the servants to whom the work is intrusted, and it is not the duty of the master.
—Westinghouse, Church, Kerr & Co. v. Callaghan, 155 Fed. 397.....
83 C. C. A. 669

All who enter the employment of a common master to accomplish a common undertaking are prima facie fellow servants, although their grades of service are different, and some direct and supervise the men subject to their command and their work, while others perform the labor.
—Westinghouse, Church, Kerr & Co. v. Callaghan, 155 Fed. 397.....
83 C. C. A. 669

The plaintiff and D. were employed by the defendant in dismantling heavy machinery in the World's Fair buildings. D. was foreman under a superintendent who was under a manager there. The day before the accident a heavy wooden frame 25 feet high had been erected and temporarily fastened in place with guy ropes under the direction of D. to be used to lift and move the heavy parts of an engine. On the day of the accident the plaintiff and four other men were working under D. to permanently secure this frame in place. D. directed the plaintiff to go upon the frame, and, after he had climbed there for the purpose of moving one of the ropes which held this frame in place so that they could use it at another place as a permanent guy rope, D. untied it below, and the frame fell and injured the plaintiff.

Held. D. was not a vice principal, but he was a fellow servant of the plaintiff, and the defendant was not liable for his negligence.
—Westinghouse, Church, Kerr & Co. v. Callaghan, 155 Fed. 397.....
83 C. C. A. 669

Digitized by Google

The homogeneous business of a master cannot be divided into distinct and separate departments under the rule in Railroad Co. v. Baugh, 13 Sup. Ct. 914, 149 U. S. 368, 383, 37 L. Ed. 772, by the testimony to that effect of his servants, and such testimony is incompetent for this purpose. The nature of the business alone can separate it into departments.
—Westinghouse, Church, Kerr & Co. v. Callaghan, 155 Fed. 397..... 83 C. C. A. 669

One who enters the employment of another thereby assumes the risk of the negligence of his fellow servants in the performance of all acts which they do while they are not discharging a positive duty of the master.
—Westinghouse, Church, Kerr & Co. v. Callaghan, 155 Fed. 397..... 83 C. C. A. 669

The servant assumes the risk of the negligence of his superior fellow servant in the direction of the men and the work to the same extent that he assumes the risk of the negligence of the fellow laborer by his side who is engaged in performing the work.
—Westinghouse, Church, Kerr & Co. v. Callaghan, 155 Fed. 397..... 83 C. C. A. 669

§ 2. —— **Actions.**

In an action by a fireman to recover for injuries received while raking ashes out of the ashpan of an engine, the question of contributory negligence is for the jury.
—Chicago, M. & St. P. Ry. Co. v. Heil, 154 Fed. 626..83 C. C. A. 400

An engine drawing 31 loaded cars stopped at a station to permit the unloading of freight from one of them, and the fireman, with the knowledge of the engineer, stepped out for the purpose of crawling under the engine and raking the ashes out of the ashpan. It was dangerous to the fireman to move the engine while he was under it. He crawled under it, and, as he was about to commence to rake out the ashes, the engine moved backward, he placed his hands upon the rail and jumped out, but before he could remove them one of the trucks passed over and crushed his left hand. The engine moved from two to four feet. There was evidence that this backward movement was caused by the recoil of the rear cars of the train after it stopped and that the engineer could not have prevented it. There was also evidence sufficient to sustain a finding by the jury that the backward movement was caused by the engineer by giving the engine steam while the lever was in the backward motion.

Held, the case was properly submitted to the jury, because, if the engineer caused the backward movement by giving the engine steam while he knew the fireman had gone to crawl under it, he was guilty of negligence, and the evidence was not conclusive that the fireman was guilty of contributory negligence.
—Chicago, M. & St. P. Ry. Co. v. Heil, 154 Fed. 626..83 C. C. A. 400

In an action by an employé for personal injury, evidence to what extent that condition was caused by the wrong of the defendant, and to what extent it was caused by the malpractice of the surgeon who treated it, is admissible, because the defendant is liable for the former and free from liability for the latter.
—Chicago, M. & St. P. Ry. Co. v. Heil, 154 Fed. 626..83 C. C. A. 400

Plaintiff was employed by defendant as a common laborer in an open slate quarry, working under a gang boss, chiefly about the hoisting engine, in loading boxes, etc. He was not an experienced quarryman, and had never had anything to do with blasting. Three blasts had been put in, and after all the men had gone up out of the quarry an attempt was made to explode them by electricity, which failed. Some of the men with the gang boss then went down, and the boss set plaintiff to dig the tamping out of one of the holes with a crowbar, and while so engaged the blast exploded and he was injured. Plaintiff had never done such work, and the evidence showed that it had never before been done in the quarry

Digitized by Google

while he was employed there. He was given no warning of the danger, and no instruction except to pour water in the hole as he worked. There was expert testimony that the drilling out of unexploded charges was highly dangerous and in the proper conduct of the work should never be done, and also testimony that it was contrary to the orders of defendant's superintendent, but such orders were not shown to have been known by plaintiff. *Held*, that the negligence of the gang boss was imputable to defendant.

—Peters v. George, 154 Fed. 634.....83 C. C. A. 408

Plaintiff's intestate, who was employed in defendant's factory, was killed at about 9 o'clock in the morning by the explosion of a water heater in the room where he was working used to heat the water in a tank in another room 75 feet distant; the connection being by means of pipes from 2½ to 3 inches in diameter. The fire under the heater was found to be out and the heater cold at 12 o'clock the night before, when the night shift came on to work, but, not being in use at night, the foreman who had general supervision of the plant took no action in respect to it, and the fire was rekindled by the janitor at about 8 in the morning. The outside temperature during the night was about 2 degrees below zero, and the room where the heater stood was quite large, with several outside windows, and was not otherwise heated, although there was a large doorway opening into an adjoining room which was kept heated at all times. A crack in the heater observed immediately before the explosion extended diagonally, and did not follow the line of any seam. There was no direct evidence as to the cause of the explosion. *Held*, that such facts and circumstances were sufficient to warrant the submission to the jury of the question whether it was caused by the freezing of the pipes preventing the circulation of the water through them to the tank which ordinarily obviated any danger and rendered an escape valve on the heater unnecessary.

—Castner Electrolytic Alkali Co. v. Davies, 154 Fed. 938.....
83 C. C. A. 510

Notice to a defendant who operated a factory that on a certain date an employé named was killed in defendant's building by reason of the explosion of a hot-water tank maintained in said building at said time, and that the explosion was due to defendant's negligence, is sufficiently specific under the New York Employer's Liability Act, Laws 1900, p. 1748, c. 600, requiring notice to be given of the "time, place and cause of the injury."

—Castner Electrolytic Alkali Co. v. Davies, 154 Fed. 938.....
83 C. C. A. 510

A copper water block in the wall of a blast furnace being operated by defendant blew out, and plaintiff, who was a plumber's helper in defendant's employ, was injured by the molten metal which escaped. The block, which was embedded in the wall, had become leaky, and preparations had been made to remove it, which could only be done when the blast was off. After much of the cement packing which held it in the wall had been removed, it was decided to allow it to remain for some hours, until the next blast should be off, in order to make repairs to the water system, which had also become defective at the same time. When the removal was about to be made, and while the furnace was still being operated, plaintiff was ordered upon a platform near the block to shut off the water, when the block was pulled, and was there when it blew out. *Held* that, although plaintiff knew of the defective water system, that the furnace was in full blast, and that a part of the packing had been removed from around the block, it could not be said as matter of law that he assumed the risk arising from such conditions, where it did not appear that he knew the dangers therefrom, or that his experience had been such that he should have known that there was danger that the block would blow out.

—National Steel Co. v. Hore, 155 Fed. 62.....83 C. C. A. 578

Digitized by Google

MEASURE OF DAMAGES.

See "Damages," § 1.

MONOPOLIES.

§ 1. **Trusts and other combinations in restraint of trade.**

Complainant, which was the owner of a number of patents relating to pneumatic straw stackers, granted licenses to manufacturers of threshing machines by which they were given the right to use any or all inventions covered by such patents and required to sell stackers made thereunder at a stated price and to pay complainant a royalty on each stacker so made and sold. They were also given the right to use the inventions covered by any other patents relating to the art which should thereafter be acquired by complainant, and it did afterward acquire the ownership of practically all patents relating to such stackers. *Held*, that such contracts were not in restraint of competition and in violation of the Sherman anti-trust act of July 2, 1890 (26 Stat. 209, c. 647 [U. S. Comp. St. 1901, p. 3200]), but were within complainant's right under the patent laws, although all of the manufacturers of threshing machines in the United States became licensees, there being no right in the public to free competition in articles covered by patents.

—Indiana Mfg. Co. v. J. I. Case Threshing Mach. Co., 154 Fed. 365... 83 C. C. A. 343

MORTGAGES.

Of personal property, see "Chattel Mortgages."
Of railroads, see "Railroads," § 1.
Receivership in foreclosure proceedings, see "Receivers," § 1.
Violation of injunction in foreclosure suit, see "Injunction," § 1.

MOTIONS.

For particular purposes or relief.

Arrest of judgment in criminal prosecutions, see "Criminal Law," § 5.
Direction of verdict in civil actions, see "Trial," §§ 1, 3.
New trial in criminal prosecutions, see "Criminal Law," § 5.

MULTIFARIOUSNESS.

In pleading in equity, see "Equity," § 3.

MUNICIPAL CORPORATIONS.

Regulation of railroads, see "Railroads," § 2.

§ 1. **Public improvements.**

A contract for a public work for a city, which contained a clause giving the director of public works of the city the right to stop the work of the contractor at any time if in his opinion it was not being done in accordance with the contract and to complete the work at the contractor's cost, construed, and provisions requiring the contractor to obtain a final certificate from the director of public works of the completion of the work according to the contract before being entitled to final payment, and making such director the final arbiter between the parties in all matters of dispute, *held* not applicable, and not to create conditions precedent to

Digitized by Google

the bringing of an action to recover the contract price, where the director stopped the work of the contractor under the power given him and had the work completed himself.

—City of Pittsburgh v. Jonathan Clark & Sons Co., 154 Fed. 464..... 83 C. C. A. 262

§ 2. Torts.

It is the duty of a city whenever a dangerous obstruction appears in its streets, even though it was unauthorized, to use reasonable diligence to remove it, and what constitutes such diligence depends on the facts in each case, and especially upon the fact whether the existence and dangerous character of the obstruction was known, or in the exercise of reasonable supervision and diligence could have been known by the city in time to have caused its removal before it produced the injury complained of.

—City of Grand Forks v. Allman, 153 Fed. 532.....83 C. C. A. 554

Under Rev. Code N. D. 1899, § 2172, which requires as a condition precedent to the maintaining of an action against a city for a personal injury that a verified claim setting forth the time, place, cause, and extent of the injury shall be presented to the mayor and common council for audit and allowance within sixty days after the happening of the injury, a claim is duly presented where it is presented to and filed by the city auditor within the specified time.

—City of Grand Forks v. Allman, 153 Fed. 532.....83 C. C. A. 554

In an action against a city to recover for a personal injury, it was shown that, when walking at night on one of the most frequently used streets of the city, plaintiff fell over a loose plank and was injured, that some time before a water pipe had been temporarily laid in the street upon the pavement and covered to prevent freezing, and that the plank in question had been placed on the covering to keep it in place. Although it was not so placed by authority of the city, it had been there for a week or more prior to the injury. *Held*, that under such evidence the question of the city's negligence was properly submitted to the jury.

—City of Grand Forks v. Allman, 153 Fed. 532.....83 C. C. A. 554

MUTUALITY.

In contract, see "Contracts," § 1.

NAMES.

See "Trade-Marks and Trade-Names."

NATIONAL BANKS.

See "Banks and Banking," § 1.

NAVIGABLE WATERS.

§ 1. Rights of public.

The owner of a canal boat which was sunk in New York Bay, who received notice of the sinking at once, and could have had it marked as required by statute within an hour, is liable for the damages caused by a passing vessel coming into collision with the wreck six hours later, when it was still unmarked.

—The Anna M. Fahy, 153 Fed. 866; The Overbrook, Id.; The Media. Id.....83 C. C. A. 48

Act March 3, 1899, c. 425, § 15, 30 Stat. 1152 [U. S. Comp. St. 1901, p. 3543], which provides that, whenever a vessel is wrecked and sunk in a

Digitized by Google

navigable channel, "it shall be the duty of the owner of such sunken craft to immediately mark it with a buoy or beacon during the day and a lighted lantern at night," places such duty upon the owner, and no one else, and he cannot shift the responsibility for an injury to another vessel resulting from his failure to perform it upon tugs which caused the wreck by their fault, when he had notice of the situation in ample time to have performed the duty before damage resulted.
—The Anna M. Fahy, 153 Fed. 866; The Overbrook, Id.; The Media. Id.....83 C. C. A. 48

NAVIGATION.

See "Navigable Waters," § 1.

NEGLIGENCE.

Causing death, see "Death," § 1.
Measure of damages, see "Damages," § 1.
Province of court and jury, see "Trial," § 1.

By particular classes of persons.

See "Carriers," § 1; "Municipal Corporations," § 2; "Railroads," § 2.
Employers, see "Master and Servant."

Condition or use of particular species of property, works, machinery, or other instrumentalities.

See "Railroads," § 2.

Contributory negligence.

Of person killed by operation of railroad, see "Railroads," § 2.
Of servant, see "Master and Servant," § 2.

§ 1. Actions.

A federal court is not bound under all circumstances to submit the question of contributory negligence to the jury.
—Delaware & H. R. Co. v. Wilkins, 153 Fed. 845.....83 C. C. A. 27

A train of cars loaded with sand and operated by defendants was being backed upon a pier for the purpose of dumping the sand into a scow which was hired by defendants, when the coupling between the locomotive and the first car broke, and the cars ran by their acquired momentum with such force against the bumper at the end of the track that the end car mounted the bumper and spilled its load upon the scow, injuring libelant, who was the wife of the owner and rightfully on the scow and at the place where the injury occurred. The evidence tended to show that the breaking of the coupling was due to improper handling of the cars by the engineer or to its defective condition. *Held* that, in either case, the defendants were chargeable with negligence, which rendered them liable for the injury, in the absence of any evidence to show the condition of the coupling, or that it had been recently examined to ascertain whether it was safe for ordinary use.
—Eriksson v. Goodwin, 154 Fed. 351.....83 C. C. A. 129

NEGOTIABLE INSTRUMENTS.

See "Bills and Notes."

NEW TRIAL.

Appealability of order granting, as dependent on finality of determination, see "Appeal and Error," § 1.

Digitized by Google

In criminal prosecutions, see "Criminal Law," § 5.
Opening or vacating judgment, see "Judgment," § 1.
Review of discretionary rulings on motion for, see "Appeal and Error," § 8.

NOTES.

Promissory notes, see "Bills and Notes."

NOTICE.

Of death of servant, see "Master and Servant," § 2.
Of nonpayment or protest of bill or note, see "Bills and Notes," § 1.

OBSTRUCTIONS.

In navigable waters, see "Navigable Waters," § 1.

OFFICERS.

Particular classes of officers.

See "Receivers."
Corporate officers, see "Corporations," §§ 3, 4.
Customs officers, see "Customs Duties," § 3.

OPENING.

Judgment, see "Judgment," § 1.
Judicial sale, see "Judicial Sales."

OPINION EVIDENCE.

In civil actions, see "Evidence," § 3.

OPINIONS.

Of courts, see "Courts," § 2.

ORDERS.

Review of appealable orders, see "Appeal and Error."

PAINTINGS.

See "Copyrights," § 1.

PALACE CARS.

See "Carriers," § 1.

PARENT AND CHILD.

Fraudulent conveyances between, see "Fraudulent Conveyances," § 1.

Digitized by Google

PARTIES.

Affecting right of removal to United States courts, see "Courts," § 1.
Domicile or residence as affecting venue, see "Venue," § 1.
In equity, see "Equity," § 2.
Joint interests, see "Joint Adventures."
On appeal or writ of error, see "Appeal and Error," § 2.
Persons concluded by judgment, see "Judgment," § 2.
To criminal prosecutions, see "Criminal Law," § 1.
To suit to foreclose vendor's lien, see "Vendor and Purchaser," § 1.

§ 1. Defendants.

Persons whose sole connection with the subject-matter of a suit is that they are agents for the person really interested are not necessary parties, where no relief is asked against them.
—Golden Cross Min. & Mill. Co. v. Free Gold Min. Co., 154 Fed. 441... 83 C. C. A. 355

An indispensable party is one who has such an interest in the subject-matter of the controversy that a final decree between the parties before the court cannot be made without injuriously affecting his interests or leaving the controversy in such a situation that its final determination may be inconsistent with equity and good conscience.
—Rogers v. Penobscot Min. Co., 154 Fed. 606.....83 C. C. A. 380

Every other party who has any interest in the controversy or the subject-matter which is separable from the interest of the parties before the court, so that it will not necessarily be directly and injuriously affected by a decree which does complete justice between them, is a proper party.
—Rogers v. Penobscot Min. Co., 154 Fed. 606.....83 C. C. A. 380

If a proper party is incapable of being made a party to the suit because beyond the jurisdiction, or if his joinder would oust the jurisdiction of the court as to the other parties before it, the suit may proceed without him, and the decree will not affect his interests. The P. Co. is a proper, but not an indispensable, party to the suit, because a decree which will do complete justice between the other parties to the controversy may be rendered without injuriously affecting its interests.
—Rogers v. Penobscot Min. Co., 154 Fed. 606.....83 C. C. A. 380

PARTNERSHIP.

See "Joint Adventures."
Bankruptcy of, see "Bankruptcy," § 3.

§ 1. The relation.

Where plaintiff's testator, having purchased certain lands, placed them in the hands of B. for sale, agreeing that, if no sales were made within five years, the arrangement should be terminated; if sufficient sales were not made to enable testator to get his money back with interest, B. should receive 5 per cent. commissions on sales made; and if testator was reimbursed within that time B. should receive one-half of the profits—the arrangement did not constitute a contract of partnership between them.
—Corbin v. Holmes, 154 Fed. 593; Holmes v. Corbin, Id..... 83 C. C. A. 367

PASSENGERS.

See "Carriers," § 1.

PATENTS.

Jurisdiction of United States court in suit involving patent as dependent on amount in controversy, see "Courts," § 3.

Digitized by Google

Manufacture of patented machine as monopoly, see "Monopolies," § 1.
Review of order in patent infringement suit as dependent on finality of determination, see "Appeal and Error," § 1.

§ 1. Subjects of patents.

The public policy declared by the patent laws is that it is for the benefit of the public to stimulate invention and that inventors shall publish their inventions, and to that end, and in consideration of such publication, to become effective at the end of 17 years, they insure to a patentee in the meantime absolute protection in the right to exclude every one else from making, using, or vending the thing patented without his consent.
—Rubber Tire Wheel Co. v. Milwaukee Rubber Works Co., 154 Fed. 358 ..... 83 C. C. A. 336

A state statute cannot interfere with the monopoly granted to a patentee and his assignees under the federal laws.
—Rubber Tire Wheel Co. v. Milwaukee Rubber Works Co., 154 Fed. 358 ..... 83 C. C. A. 336

§ 2. Patentability.

While the mere substitution of one material for another in a structure does not constitute invention, it is something to be considered on that issue, where it makes possible changes in other elements of a combination to produce improved operation.
—Houghton v. Whitin Mach. Works, 153 Fed. 740..... 83 C. C. A. 84

Where three separate elements in a patented device, each performing an individual function, are supplanted in another device by a single element which itself performs the functions of all three, the threefold capacity of the single element is not the equivalent of the three separate elements.
—Lambert Hoisting Engine Co. v. Lidgerwood Mfg. Co., 154 Fed. 372..... 83 C. C. A. 350

§ 3. Construction and operation of letters patent.

A patent cannot be given a construction broader than its terms, in order to cover something which might have been claimed, but was not.
—Universal Brush Co. v. Sonn, 154 Fed. 665..... 83 C. C. A. 422

§ 4. Title, conveyances, and contracts.

A system of contracts between the owner of a patent for rubber-tired wheels and its licensees, fixing uniform prices and the percentage of the whole output which should be made and sold by each licensee, and providing that the business of all should be supervised by commissioners appointed by the licensor, is not rendered invalid by a provision for the accumulation of a fund by such commissioners with power to use the same with the consent of a majority in the purchase of tires from any or all of the licensees and to sell the same to the trade at such prices as they should deem for the best interest of all; it being within the right of the owner of the patent, either itself or through its licensees, to push the sale of its tires, and, in doing so, to undersell the makers of other tires or infringers.
—Rubber Tire Wheel Co. v. Milwaukee Rubber Works Co., 154 Fed. 358..... 83 C. C. A. 336

Use of a patented invention cannot be had except on the inventor's terms, and the requirement that a licensee join other licensees in a combination or pool to control the prices and output of an innocuous patented article is not in violation of the Sherman anti-trust act of July 2, 1890 (26 Stat. 209, c. 647, § 1 [U. S. Comp. St. 1901, p. 3200]). Patented articles, unless and until they are released by the owner of the patent from the dominion of his monopoly, are not articles of trade or commerce among the several states within the meaning of such act, because they are not articles in which the people are entitled to freedom of trade.
—Rubber Tire Wheel Co. v. Milwaukee Rubber Works Co., 154 Fed. 358..... 83 C. C. A. 336

Digitized by Google

A suit by the owner of patents to enjoin a licensee from using any of the patented devices except on the terms imposed by the license contract is not one for the specific performance of the contract, but is one to enjoin infringement of the patents by excluding defendant from that part of the patent domain not granted by the contract, and is maintainable in a federal court of equity irrespective of the validity of the contract.
—Indiana Mfg. Co. v. J. I. Case Threshing Mach. Co., 154 Fed. 365.....83 C. C. A. 343

The Buchanan patent No. 467,476, for a pneumatic straw stacker, covers the uniting of old elements to form a novel and useful combination of a generic character, and its claims are not limited in scope by anything in the prior art. Such patent is dominant in the art, and the patents to Nethery, Nos. 493,734 and 517,475, and to Landis, Nos. 512,553 and 514,266, are for improvements only and subordinate thereto, and the uniting of all in a single ownership is not therefore in restraint of competition.
—Indiana Mfg. Co. v. J. I. Case Threshing Mach. Co., 154 Fed. 365.....83 C. C. A. 343

§ 5. Infringement.

A court has no power to award an arbitrary sum as profits or damages recoverable for the infringement of a patent, not based upon any finding made by the master on the accounting nor upon the evidence.
—P. P. Mast & Co. v. Superior Drill Co., 154 Fed. 45...83 C. C. A. 157

On an accounting before a master in respect to profits made by defendant from the infringement of a patent, where both complainant and defendant were large manufacturers of the articles to which the patent related and located in the same city, evidence of the cost of manufacture to complainant in its factory is admissible, and if not controverted, and in the absence of any evidence of the actual cost of manufacture to defendant, may be taken as establishing such cost.
—P. P. Mast & Co. v. Superior Drill Co., 154 Fed. 45...83 C. C. A. 157

On an accounting before a master for damages for infringement of a patent, evidence of license contracts made between complainant and other responsible parties, by which they were to pay a royalty for the use of the patented device, is admissible, and if the contracts were made in good faith, and the royalties stipulated for are so far uniform as to establish a reasonably definite basis of value, they may properly be taken as fixing the measure of damages, even though the contracts were made pending the suit, where infringement by the defendant was continuing.
—P. P. Mast & Co. v. Superior Drill Co., 154 Fed. 45...83 C. C. A. 157

Where, on an accounting before a master for infringement of a patent, evidence is introduced both as to damages and profits, it is proper for the master to report his findings and conclusions upon each line of evidence separately.
—P. P. Mast & Co. v. Superior Drill Co., 154 Fed. 45...83 C. C. A. 157

On an accounting as to profits, made by an infringer of a patent, covering a part of a machine which had practically superseded all devices to produce a similar result previously in use, it was proper, in determining the cost of manufacture, to compare the cost of making the machine with the patented device with that of making the one which was the nearest approach to it in the market and in common use.
—P. P. Mast & Co. v. Superior Drill Co., 154 Fed. 45...83 C. C. A. 157

A manufacturer of sound records only adapted to be practically used within the United States in a patented talking machine made and sold by another, in which the record disk, while not itself patented, is an essential element of the patented combination, who sells the same to owners of such machines for use therein is a contributory infringer of the patent.
—Leeds & Catlin Co. v. Victor Talking Mach. Co., 154 Fed. 58.....83 C. C. A. 170

Digitized by Google

In an action at law to recover damages for the infringement of a patent, where there is no established market value or license fee, general evidence is admissible to show the extent of the plaintiff's damages from the infringement, and he is entitled to show the utility and advantages of the invention over old devices, as a basis from which the jury may estimate the extent of his loss.

—McCune v. Baltimore & O. R. Co., 154 Fed. 63.....83 C. C. A. 175

Evidence in a suit for infringement of a patent *held* insufficient to show that the defendant was privy to a prior suit brought by complainant against others so as to render a deposition taken therein admissible against defendant.

—Rumford Chemical Works v. Hygienic Chemical Co., 154 Fed. 65... 83 C. C. A. 177

A patent should be adjudged void on demurrer for lack of patentable invention apparent on its face only in exceptional cases, where the question is free from doubt.

—Hogan v. Westmoreland Specialty Co., 154 Fed. 66..83 C. C. A. 178

A suit for infringement of a patent is not a proceeding in rem, and a decree of a Circuit Court of Appeals in such a suit adjudging a patent void is binding only on the parties, and does not affect the validity of a license contract subsequently made between the owner of the patent and others, which is enforceable as fully and to the same extent in the circuit in which such decree was rendered as elsewhere in the United States.

—Rubber Tire Wheel Co. v. Milwaukee Rubber Works Co., 154 Fed. 358.....83 C. C. A. 336

§ 6. Decisions on the validity, construction, and infringement of particular patents.

The North patent, No. 480,029, for a conveying apparatus, relating to fall rope carriers for cable conveyors, is not infringed by the device of the Delaney & Lambert patent, No. 829,911. *Held* infringed, however, by another device manufactured by defendant.

—Lambert Hoisting Engine Co. v. Lidgerwood Mfg. Co., 154 Fed. 372.....83 C. C. A. 350

The Kribs patent, No. 542,565, for a press for making screw insulators, *held* not infringed.

—Brookfield v. Elmer Glass Works, 154 Fed. 197.....83 C. C. A. 180

The Dusedau patent, No. 548,973, for a cable hoist, is void for lack of invention.

—Lambert Hoisting Engine Co. v. Lidgerwood Mfg. Co., 154 Fed. 372.....83 C. C. A. 350

The Fielding patent No. 714,290, for an electrical receptacle which covers an improvement on the device of the patentee's earlier patent No. 660,-154, is void for lack of invention.

—Fielding v. Crouse-Hinds Electric Co., 154 Fed. 377...83 C. C. A. 331

The Morrison patent, No. 717,014, for a method of making brushes, which consists in depositing a mass of heated plastic composition, which becomes hard when cooled, within a chambered brush frame having a contracted aperture, and forcing one end of the groups of bristles into the composition when in the plastic state, is not a pioneer, but covers merely an improvement on known methods, and must be limited strictly to the particular advance made. It is not infringed by a construction in which the aperture of the chamber is not contracted, but the sides are perpendicular to the bottom, but in which the chamber has a raised portion in the center, which assists in holding the composition in place by adhesion and also lightens the brush.

—Universal Brush Co. v. Sonn, 154 Fed. 665.....83 C. C. A. 422

The Roesch patent, No. 717,122, for a pressure governor, claim 5, *held* valid and infringed by one hot water regulator made by defendants, but,

Digitized by Google

in view of the narrow construction which must be given it on account of the prior art, not infringed by a second regulator.
—Davis & Roesch Temperature Controlling Co. v. Roesch, 154 Fed. 952.....83 C. C. A. 261

The Hogan patent, No. 752,903, for a dredge for salt or pepper, is not so manifestly devoid of invention on its face as to warrant its being declared void on demurrer to a bill for its infringement.
—Hogan v. Westmoreland Specialty Co., 154 Fed. 66..83 C. C. A. 178

The Houghton reissued patent, No. 12,263 (original No. 753,577), for an improved thread-guide for spinning or twisting machines, was applied for within about four months after the granting of the original patent, which was within a reasonable time, and, in view of the broadened claims which were necessary to cover the actual invention, was a proper reissue. The improvement of the patent, which consists in substituting, for the wooden finger-heads of the prior art, heads made of metal accurately hinged and properly adjusted to a vertical metal strip secured to the face of a doffing-rail, making it possible to change the thread-guide from soft to hard wire, permitting an accurate adjustment of metal parts at the outset, and under such conditions as to secure continued accuracy of position in operation, constitutes a positive advance in the practical art of cotton spinning and twisting, and discloses invention of such character as to relieve the patent in a measure from the operation of the narrow rules of construction which apply to improvement patents that only slightly advance the art. Claims 1, 2, 3, and 4, also, *held* infringed.
—Houghton v. Whitin Mach. Works, 153 Fed. 740.....83 C. C. A. 84

---

§ 7. Patents enumerated.

ENGLISH.

1868.

218. Pneumatic hay conveyor, cited 346

UNITED STATES.

DESIGN.

37,649. Design for bedspring, held to disclose patentable invention also held infringed 426

ORIGINAL.

297,561. Pneumatic straw stacker, cited 346
434,550. Cable hoist, cited..... 351
467,476. Pneumatic straw stacker, held valid and not limited by prior art.....343, 345
480,029. Conveying apparatus, held not infringed by No. 829,911, but held infringed by another device 350, 351
493,734. Pneumatic straw stacker, cited 343, 347
512,553. Pneumatic straw stacker, cited 343, 347
514,266. Pneumatic straw stacker, cited 343, 347
517,475. Pneumatic straw stacker, cited 343, 347
534,543. Talking machine, cited.... 170
542,565. Press for making screw insulators, held not infringed 180
548,973. Cable hoist, held void for lack of invention..... 350
550,973. Cable hoist, cited..... 351
554,675. Rubber tired wheels, cited 337
557,868. Disk grain drills, cited 158, 159
660,154. Receptacle for incandescent lamp, cited.... 331
677,988. Thread-guide for spinning machine, cited..... 89
678,619. Ball journal bearing for railroad, cited..... 537
717,014. Method of making brushes, limited and held not infringed 422
714,220. Electrical receptacle, held void for lack of invention 331
717,122. Pressure governor, claim 5 held valid and infringed by one regulator but not by the other..... 261
752,903. Salt or pepper dredge, held not void on demurrer.. 178
753,577. Thread guide for spinning machines, claims 1, 2, 3 and 4 held infringed..84, 91
829,911. Conveying apparatus held not to infringe No. 480,029 .....350, 352

REISSUED.

12,263. Thread-guide for spinning machines, claims 1, 2, 3 and 4 held infringed..84, 91

Digitized by Google

PAYMENT.

By receiver, see "Receivers," § 1.
Of duties, see "Customs Duties," § 4.

PERFORMANCE.

Of contract, see "Contracts," §§ 3, 4.

PERSONAL INJURIES.

Particular causes or means of injury.

See "Negligence."
Operation of railroad, see "Railroads," § 2.

Particular classes of persons injured.

Employé, see "Master and Servant."
Passenger, see "Carriers," § 1.
Stevedores, see "Shipping," § 3.
Traveler on highway, see "Municipal Corporations," § 2.

Remedies.

Measure of damages, see "Damages," § 1.
Special interrogatories and findings, see "Trial," § 2.

PETITION.

In bankruptcy, see "Bankruptcy," § 2.

PLEADING.

Allegations as to particular facts, acts, or transactions.

Statute of frauds, see "Frauds, Statute of," § 1.

In particular actions or proceedings.

See "Equity," § 3; "Libel and Slander," § 2; "Replevin," § 2.
For causing death, see "Death," § 1.
For infringement of patent, see "Patents," § 5.
Indictment or criminal information or complaint, see "Indictment and Information."

§ 1. Signature and verification.

Rev. St. Mo. 1899, § 746 [Ann. St. 1906, p. 731], provides that, when any petition or other pleading shall be founded on any instrument of writing charged to have been executed by the other party, the execution of the instrument shall be adjudged confessed, unless the party charged to have executed the same denies its execution by verified answer or replication. *Held*, that where a verified answer pleaded that a written instrument had been made by plaintiff to defendant, and was the basis of an employer's liability bond sued on, plaintiff's failure to verify its replication of general denial only admitted the execution and delivery of such instrument, and was sufficient to join issue on the question whether the statement was the basis of the contract.

—Ætna Indemnity Co. v. J. R. Crowe Coal & Mining Co., 154 Fed. 545.....83 C. C. A. 431

Digitized by Google

§ 2. **Issues, proof, and variance.**

Where the variance between the pleading and the facts which the pleader seeks to prove is so slight that it is obvious that the opposing party could not have been misled by it in the preparation of his case for trial, it is the duty of the court to disregard it or to permit an amendment to conform the pleading to the proof offered.

—Derham v. Donohue, 155 Fed. 385.....83 C. C. A. 657

POLICY.

Of insurance, see "Insurance."

POST OFFICE.

Duplicity in indictment for offense against postal laws, see "Indictment and Information," § 1.

§ 1. **Offenses against postal laws.**

An indictment for using the mails to defraud, in violation of Rev. St. § 5480 [U. S. Comp. St. 1901, p. 3696], by subdividing a tract of land in Louisiana of small value into lots 10 or 20 feet square, and selling certificates, each purporting to give the holder an option to purchase an interest in a lot, upon false representations that the lots were within an oil district and very valuable, and that large cash offers had been made for certain of the same, construed, and *held* to charge a scheme and artifice to defraud within the meaning of the statute, which, when carried on by means of correspondence through the mails, constituted a violation thereof.

—Gourdain v. United States, 154 Fed. 453.....83 C. C. A. 309

Where accused had been a party to a scheme to defraud during a period when the persons conducting the same had done so solely by means of express and telegraph companies, but was not shown to have had any connection with his former confederates after they commenced to unlawfully use the mails for such purpose, he was not guilty of violating Rev. St. § 5480 (3 U. S. Comp. St. 1901, p. 3696), prohibiting the use of the mails for the furtherance of a scheme to defraud.

—Dalton v. United States, 154 Fed. 461.....83 C. C. A. 317

A post office superintendent discovered a misboxed letter, which had been placed in a "dead" pigeonhole at the top of the case, where defendant, a clerk, was engaged in sorting mail. The letter was removed by the superintendent and handed to a post office inspector, who took it to the addressee, and, without delivering it, obtained permission to open it. He then returned to the post office, unsealed the letter, and took from it an express order for $2, a statement of account, and a letter from the sender of the money order. After making a copy of the letter, he placed it in the envelope with two marked $1 bills, and forwarded the money order and the statement to the addressee. The envelope containing the letter and bills having been duly sealed was returned to the dead pigeonhole, and a short time thereafter was embezzled by defendant. *Held*, that the letter at the time it was returned by the inspector to the dead pigeonhole had not ceased to be mail matter, and that defendant was therefore properly convicted of embezzling a letter containing inclosures, in violation of Rev. St. § 5467 [U. S. Comp. St. 1901, p. 3691].

—Ennis v. United States, 154 Fed. 842.....83 C. C. A. 478

Rev. St. § 1024 [U. S. Comp. St. 1901, p. 720], authorizes the consolidation for trial of indictments for using the mails to defraud under section 5480 [U. S. Comp. St. 1901, p. 3696], notwithstanding the fact that such indictments charge offenses not committed within the same six months and which could not be joined in one indictment under the latter section, and in the aggregate more than the three offenses which may be so joined.

—Booth v. United States, 154 Fed. 836.....83 C. C. A. 552

Digitized by Google

PRACTICE.

Adoption by United States courts of practice of state courts, see "Courts," § 3.
Procedure of particular courts, see "Courts."

In particular civil actions or proceedings.

See "Habeas Corpus," § 1; "Replevin."

Particular proceedings in actions.

See "Abatement and Revival"; "Appearance"; "Damages," § 2; "Evidence"; "Judgment"; "Judicial Sales"; "Jury"; "Parties"; "Pleading"; "Removal of Causes"; "Trial"; "Venue."
Verdict, see "Trial," § 2.

Particular remedies in or incident to actions.

See "Injunction"; "Receivers."

Procedure in criminal prosecutions.

See "Criminal Law."

Procedure in exercise of special or limited jurisdiction.

In admiralty, see "Admiralty"; "Shipping," § 5.
In bankruptcy, see "Bankruptcy," § 2.
In equity, see "Equity."

Procedure on review.

See "Appeal and Error."

PREFERENCES.

Effect of proceedings in bankruptcy, see "Bankruptcy," § 3.

PREJUDICE.

Ground for reversal in civil actions, see "Appeal and Error," § 8.

PRESENTMENT.

Of bill or note, see "Bills and Notes," § 1.

PRESUMPTIONS.

In criminal prosecutions, see "Criminal Law," § 3.
On appeal or error, see "Appeal and Error," § 8.

PRINCIPAL AND ACCESSORY.

See "Criminal Law," § 1.

PRINCIPAL AND AGENT.

Agency in particular relations, offices, or occupations.

See "Attorney and Client."
Agent of steamship company, see "Shipping," § 3.
Agents of charterer, see "Shipping," § 2.
Corporate agents, see "Corporations," §§ 3, 4.

Digitized by Google

§ 1. **Rights and liabilities as to third persons.**
If a principal not disclosed by a contract made by and in the name of his agent subsequently claims the benefit of it, the contract thereby becomes his own to the same extent as if his name had originally appeared as a contracting party.
—Great Lakes Towing Co. v. Mill Transp. Co., 155 Fed. 11..... 83 C. C. A. 607

PRINCIPAL AND SURETY.

See "Guaranty."

PROBATE.

Of will, see "Wills," § 1.

PROCESS.

See "Injunction"; "Replevin."
Effect of appearance, see "Appearance."
In equity, see "Equity," § 2.

PROFITS.

Accounting by infringer of patent as to, see "Patents," § 5.

PROMISSORY NOTES.

See "Bills and Notes."

PROPERTY.

See "Copyrights"; "Trade-Marks and Trade-Names."
Intermixture, see "Confusion of Goods."
Ownership of vessel, see "Shipping," § 1.
Taking for public use, see "Eminent Domain."

PROSTITUTION.

See "Disorderly House."

PROTEST.

Of bill or note, see "Bills and Notes," § 1.

PROXIMATE CAUSE.

Of death of passenger, see "Carriers," § 1.

PUBLIC LANDS.

§ 1. **Government ownership.**
On the trial of an indictment for violation of section 1 of Act Feb. 25, 1885, c. 149, 23 Stat. 321 [U. S. Comp. St. 1901, p. 1524], containing three counts, the first charging the unlawful erection and construction of an inclosure of certain public lands, the second the unlawful maintenance and

Digitized by Google

control of such inclosure, and the third the unlawful prevention and obstruction of free passage over said lands by means of fencing and inclosing the same, a verdict of not guilty on the first and third counts is not inconsistent with one of guilty on the second.

—Carroll v. United States, 154 Fed. 425.....83 C. C. A. 245

On the trial of a defendant charged with maintaining an unlawful inclosure of public lands, a deed from a railroad company to defendant for unsurveyed public lands, described by section and subdivison as though surveyed, is inadmissible to show color of title, since it creates no right to any particular land.

—Carroll v. United States, 154 Fed. 425.....83 C. C. A. 245

The charge of the court on the trial of a defendant charged with maintaining an unlawful inclosure of public lands, construed in its entirety, *held* free from error.

—Carroll v. United States, 154 Fed. 425.....83 C. C. A. 245

PUBLIC SERVICE CORPORATIONS.

See "Carriers"; "Railroads."

PUBLIC USE.

Taking property for public use, see "Eminent Domain."

RAILROADS.

Allowance of claims in railroad receivership, see "Receivers," § 1.
Approval by engineers of performance of contract for construction of railroad bridge, see "Contracts," § 4.
As employers, see "Master and Servant."
Carriage of goods and passengers, see "Carriers."
Replevin of property in possession of railroad company, see "Railroads," § 1.
Wrongful death in general caused by operation of, see "Death," § 1.

§ 1. Indebtedness, securities, liens, and mortgages.

A mortgagee of the property acquired and to be acquired and of the income of a quasi public corporation, such as a railroad company, takes a lien on the net income after the current expenses of operation in the ordinary course of business are paid, and impliedly agrees that the gross income shall be first applied to the payment of these expenses.

—Rodger Ballast Car Co. v. Omaha, K. C. & E. R. Co., 154 Fed. 629 83 C. C. A. 403

§ 2. Operation.

As against a bare licensee a railroad company may run its trains in the usual way, without special precautions, if the circumstances do not of themselves give warning of his probable presence, and he is not seen until it is too late to prevent injury.

—Delaware & H. R. Co. v. Wilkins, 153 Fed. 845.....83 C. C. A. 27

Intestate was killed while walking as a licensee along defendant's railroad track. He was aware of the approach of the train, and stepped outside the rails to stand until it should pass him, not appreciating the fact that a curve at the point where he was standing would cause the "bucking-beam" of the engine pilot to project further than usual. He stood so close to the track that he was hit by the beam, though a single step back would have placed him in a position of safety. *Held*, that intestate was negligent as matter of law.

—Delaware & H. R. Co. v. Wilkins, 153 Fed. 845.....83 C. C. A. 27

Shannon's Code Tenn. § 1574, subsec. 4, which requires every railroad company to keep some person on the locomotive always on the lookout

Digitized by Google

ahead and to sound the whistle, apply the brakes, and employ every means to stop the train when any person, animal, or other obstruction appears upon the road, does not apply to a train which became uncoupled on a side track in depot grounds and was backing up to recouple.
—Payne v. Illinois Cent. R. Co., 155 Fed. 73.....83 C. C. A. 589

A bridge foreman on a railroad, familiar with the operation of trains thereon, and knowing that special trains were liable to run at any time, who, while not in the performance of any duty for the company, but in the pursuit of his own affairs, went upon the track at night on a hand car showing no light and was killed in a collision with a special train at a distance from any crossing, was guilty of contributory negligence, and there can be no recovery from the company for his death, even conceding that the train was negligently operated, where such negligence was not willful nor wanton, and the presence of the hand car approaching on the track was not known to the engineer until the collision occurred.
—Russell v. Oregon Short Line R. Co., 155 Fed. 22....83 C. C. A. 618

RATIFICATION.

Of acts of corporate officers, see "Corporations," § 4.

RECEIVERS.

In bankruptcy proceedings, see "Bankruptcy," § 3.

§ 1. Allowance and payment of claims.

A court of equity engaged in administering mortgaged railroad property under a receivership in a foreclosure suit may in its discretion prefer unpaid claims for current expenses incurred in the ordinary operation of the railroad within a limited time, usually six months, before the receivership, to the claims of bondholders secured by a prior mortgage, in the distribution of the income or of the proceeds of the corpus of the mortgaged property.
—Rodger Ballast Car Co. v. Omaha, K. C. & E. R. Co., 154 Fed. 629
83 C. C. A. 403

The test of the equity which entitles a claim to a preference over the mortgage in foreclosure is whether the consideration of the claim was or was not a part of the current expenses of the ordinary operation of the corporation within the time limited.
—Rodger Ballast Car Co. v. Omaha, K. C. & E. R. Co., 154 Fed. 629
83 C. C. A. 403

Neither the fact that the consideration of the claim conserved the property and increased the security of the mortgagee, nor the fact that it was necessary to keep the mortgagor a going concern or to continue its business or operation, will raise a preferential equity in its favor, if its consideration was not a part of the current expenses of the ordinary operation of the mortgagor.
—Rodger Ballast Car Co. v. Omaha, K. C. & E. R. Co., 154 Fed. 629
83 C. C. A. 403

Claims for the purchase price or for the rental of engines, freight and passenger cars are not entitled to preference in payment out of the income or out of the corpus of the mortgaged property over those of creditors secured by prior mortgages.
—Rodger Ballast Car Co. v. Omaha, K. C. & E. R. Co., 154 Fed. 629
83 C. C. A. 403

A claim for $26,192.05, the purchase price of 32 ballast cars, bought by a mortgagor railroad company operating 168 miles of railroad within six months of the appointment of receivers, is not a current expense of the ordinary operation of such a railroad company, and is not entitled to

Digitized by Google

preference in payment out of the income or the corpus of the mortgaged property in preference to those of bondholders secured by prior mortgages. The broad language of the dictum in Fosdick v. Schall, 99 U. S. 235, 252, 25 L. Ed. 339, that "necessary operating and managing expenses, proper equipment, and useful improvements" are to be deducted from the current income before the net income out of which the mortgage is to be paid arises, has been disapproved and modified, and the class of claims entitled to equitable preference has been limited to those for the current expenses of ordinary operation within six months of the receivership, by the later decisions of the Supreme Court in Kneeland v. Trust Co., 136 U. S. 89, 98, 10 Sup. Ct. 950, 34 L. Ed. 379, Morgan's L. & T. R. & S. S. Co. v. Texas Cent. Ry. Co., 137 U. S. 171, 196, 198, 11 Sup. Ct. 61, 34 L. Ed. 625, Thompson v. Railroad Co., 132 U. S. 68, 71, 73, 74, 10 Sup. Ct. 29, 33 L. Ed. 256, Thomas v. Car Co., 149 U. S. 95, 110, 13 Sup. Ct. 824, 37 L. Ed. 663, Southern Ry. Co. v. Carnegie Steel Co., 176 U. S. 257, 296, 20 Sup. Ct. 347, 44 L. Ed. 458, Lackawanna Iron & Coal Co. v. Farmers' Loan & Trust Co., 176 U. S. 298, 315, 20 Sup. Ct. 363, 44 L. Ed. 475, and Gregg v. Metropolitan Trust Co., 197 U. S. 183, 25 Sup. Ct. 415, 49 L. Ed. 717. See Illinois Trust & Sav. Bank v. Doud, 44 C. C. A. 389, 105 Fed. 123, 52 L. R. A. 481.

—Rodger Ballast Car Co. v. Omaha, K. C. & E. R. Co., 154 Fed. 629 83 C. C. A. 403

RECORDS.

Of contract of conditional sale, see "Sales," § 3.
Transcript on appeal or writ of error, see "Appeal and Error," § 5.

REFERENCE.

In suit for infringement of patent, see "Patents," § 5.

RELEVANCY.

Of evidence in civil actions, see "Evidence," § 2.

REMEDY AT LAW.

Effect on jurisdiction of equity, see "Equity," § 1.

REMOVAL OF CAUSES.

Application for removal as general appearance, see "Appearance."

§ 1. Citizenship or alienage of parties.

In a determination of the jurisdiction of the national courts and the right to remove causes of action to them, indispensable parties only should be considered, because all others may be dismissed or disregarded if their presence will oust or restrict the jurisdiction or the right.

—Rogers v. Penobscot Min. Co., 154 Fed. 606.....83 C. C. A. 380

§ 2. Proceedings to procure and effect of removal.

A Circuit Court acquires jurisdiction of a suit by removal, although neither of the parties is a resident of the district, and the suit could not originally have been brought in that court, where the plaintiff fails to object in any way to such removal, and submits to trial on the merits.

—Louisville & N. R. Co. v. Fisher, 155 Fed. 68; Scott v. Louisville & N. R. Co., Id.....83 C. C. A. 584

Digitized by Google

REPLEVIN.

§ 1. Right of action and defenses.
The physical possession of wool being in a railroad company, and the buyer's agent having directed the railroad company's agent not to give up the wool, replevin was properly brought by a bank, to which the second sale was made, against the railroad company, and the original buyer's agent.
—Northwestern State Bank of Hay Springs, Neb., v. Silberman, 154 Fed. 809.....83 C. C. A. 525

§ 2. Pleading and evidence.
Replevin is a possessory action, and where a wrongful taking is not alleged, but only a wrongful detention, the declaration must allege an immediate right of possession in the plaintiff, and an allegation of ownership merely will not sustain a judgment for plaintiff where defendant makes default.
—Midland Contracting Co. v. Toledo Foundry & Machine Co., 154 Fed. 797.....83 C. C. A. 489

REQUESTS.

For instructions in criminal prosecutions, see "Criminal Law," § 4.

RESCISSION.

Of contract, see "Contracts," § 3.
Of insurance policy, see "Insurance," § 2.

RESERVATIONS.

For grantor in fraudulent conveyance, see "Fraudulent Conveyances," § 1.

RES JUDICATA.

See "Judgment," § 2.

RESTRAINT OF TRADE.

Trusts and other combinations, see "Monopolies," § 1.

RESULTING TRUSTS.

See "Trusts," § 1.

REVENUE.

See "Customs Duties."

REVIEW.

See "Appeal and Error"; "Criminal Law," § 6.

RISKS.

Assumed by employé, see "Master and Servant," §§ 1, 2.
Within insurance policy, see "Insurance," § 6.

Digitized by Google

ROADS.

Streets in cities, see "Municipal Corporations," § 2.

RULES OF COURT.

Assignments of error, see "Appeal and Error," § 6.
Briefs on appeal or error, see "Appeal and Error," § 7.

SALES.

See "Judicial Sales."
Conditional sale as distinguished from chattel mortgage, see "Chattel Mortgages," § 1.
Of realty, see "Vendor and Purchaser."
Relevancy of evidence of unsatisfactory character of other articles sold on issue of breach of warranty, see "Evidence," § 2.

§ 1. Operation and effect.

The owner of a sawmill entered into a contract to sell and deliver all the lumber of certain descriptions then on hand and all he should make during a specified time at stated prices; the contract providing that the purchasers should advance every 30 days 75 per cent. of the price of the lumber cut during the preceding month, and the remainder of the price, less freight, to be paid when the lumber was shipped and delivered. The seller was adjudicated a bankrupt, having in his yard at the time certain lumber of the kinds described in the contract, which had been separately piled, and for which bills had been presented to the purchasers, who had paid 75 per cent. of the price shown thereby. *Held*, that as to such lumber the sale was complete, and the title had vested in the purchasers, who were entitled to possession of the same as against the trustee in bankruptcy.

—H. Baars & Co. v. Mitchell, 154 Fed. 322.....83 C. C. A. 466

At the time an executory contract for the sale of wool was made, the buyer's agent paid $2,000 earnest money by a check drawn by the agent on his principals, which was accepted by the seller. After the wool had been delivered, the buyer's agent asked for information as to how the seller desired the balance of the price paid, offering a draft on the buyers or the buyer's bank draft on Omaha, and the seller replied, "that's all right, either one is good"; but, after the wool was loaded on the cars and the amount computed, the seller demanded the currency, whereupon the buyer's agent wired for the money, agreeing that the wool should not be removed until the money was received and paid two days thereafter. In the meantime, the seller sold the wool to another, and, on the buyer's receipt of the money the day succeeding this sale, it was tendered to the seller as soon as he could be found. *Held*, that the seller had waived payment of the price in cash, and that title to the wool passed on delivery.

—Northwestern State Bank of Hay Springs, Neb., v. Silberman, 154 Fed. 809.....83 C. C. A. 525

A corporation contracted to sell to S. 6,000 fleeces, about 55,000 pounds of wool, which it agreed to deliver to the buyer on or about the 12th to 15th day of June, 1905, for 18 cents a pound, acknowledging payment of $2,000 on account; the wool to be from native sheep in merchantable order, well tied, and honestly packed. At the time the contract was made, the wool was on sheep belonging to the corporation; the latter being required to sever the fleeces and put the wool in condition for delivery. *Held*, that the contract was executory, and that title did not pass until delivery of the wool and payment or tender of the price.

—Northwestern State Bank of Hay Springs, Neb., v. Silberman, 154 Fed. 809.....83 C. C. A. 525

Digitized by Google

§ 2. Remedies of buyer.

The charge of a trial court in an action to recover the purchase price of an engine considered, and *held* to have fully and fairly submitted to the jury the issues raised with respect to the compliance of the engine with the warranty made in the contract of sale.

—Hammerschlag Mfg. Co. v. Struthers-Wells Co., 154 Fed. 326..... 83 C. C. A. 198

§ 3. Conditional sales.

Under the law of Arkansas a conditional contract of sale is valid though it provides that the vendee may sell the property in the usual course of business.

—In re E. M. Newton & Co., 153 Fed. 841; Swofford Bros. Dry Goods Co. v. Bryant, Id.....83 C. C. A. 23

Under the law of Arkansas, a conditional contract of sale providing that the vendee may sell the property in the usual course of business is valid, though it is not recorded.

—In re E. M. Newton & Co., 153 Fed. 841; Swofford Bros. Dry Goods Co. v. Bryant, Id.....83 C. C. A. 23

SATISFACTION.

Of judgment, see "Judgment," § 3.

SCHOOLS AND SCHOOL DISTRICTS.

Maritime nature of contract relating to school on shipboard, see "Admiralty," § 1.

SCIRE FACIAS.

To revive judgment in United States court, see "Courts," § 3.

SEAMEN.

When the deviation of a vessel from her course in order to procure medical attention for an injured member of the crew would add substantially to the risks of the voyage, there must be some substantial exigency to justify it; at least reasonable ground to believe that consequences more serious than the mere pain and suffering which ordinarily attend the smaller catastrophies of a sailor's life are to be expected.

—The Cuzco, 154 Fed. 177.....83 C. C. A. 181

Libelant, cook on a steamship, was injured while the vessel was lying in Fortescue Bay, Straits of Magellan, by falling through a hatchway; his shoulder being dislocated and his head injured, the latter injury not being serious. The injuries were examined and treated by the master and steward, who decided that there was no dislocation of the shoulder, but merely a sprain, and the vessel proceeded on her course to the westward until she reached Coronel, 1,100 miles distant, when surgical treatment was obtained. The time ordinarily required to reach such port was 5 days, but owing to bad weather it took 7 or 8 days. By returning upon her course 70 miles in the Straits to Punta Arenas, medical aid could have been obtained. *Held* that, in view of the belief of the master, after examination, that the injury was not serious, and of the dangers of navigation of the Straits in the winter season, the decision of the master to continue the voyage, rather than expose the vessel and cargo to the risks of a return, was not unreasonable, and did not subject the vessel to liability.

—The Cuzco, 154 Fed. 177.....83 C. C. A. 181

Digitized by Google

Libelants shipped as seamen on board a steamship of respondent's for a voyage of nine months from San Francisco to Siberia and return. The ship carried a contraband cargo, and was captured by the Japanese and taken with her crew to a Japanese port, where the crew were released prior to the expiration of their term of service. Respondent furnished them tickets for steerage transportation to San Francisco on another of its vessels. On reaching Honolulu libelants went on shore, and, because of a regulation of the Marine Hospital service, made because it was at the time an infected port, they were not allowed to return to the ship, and their effects were thrown upon the pier, where some of them were lost. Libelants were left without money, and respondent's agent refused to assist them or pay them wages due. After they had employed counsel to bring a suit, respondent offered to take them to San Francisco on another vessel, which offer they then refused. It appeared that they left the ship without objection on the part of the officers and without knowledge of the port regulation. *Held* that, while respondent was not liable for any delay in taking libelants to San Francisco, their term of service not having expired, it was responsible for their support in the meantime, and was liable for the loss and damage to them consequent upon its refusal to recognize such obligation and for the loss of their clothes.

—Pacific Mail S. S. Co. v. Iverson, 154 Fed. 450.....83 C. C. A. 306

SERVANTS.

See "Master and Servant."

SHIPPING.

See "Admiralty"; "Collision"; "Seamen"; "Towage."
Validity of contract of affreightment, see "Contracts," § 1.

§ 1. Title.

Evidence considered, and *held* not to sustain the claim of a respondent to the ownership of a vessel in controversy.

—The Robert R. Kirkland, 153 Fed. 863.....83 C. C. A. 45

One of the respondents and another person were appointed joint agents to represent a number of parties who were joined in the purchase of the plant and vessels of a dredging company, to be paid for in installments, with power to make the payments and receive and manage the property. The purchasers of the dredging fleet ratified the action of the directors of a dredge owners' association, of which they were all members, and appointed a committee to supersede the agents previously acting, with power to complete payment and take title to the property purchased and to manage and dispose of the same. *Held*, that such committee, after receiving a bill of sale in the purchased vessels in their own names, were authorized to maintain a suit as owners to recover possession of one of the vessels, against one of the constituent owners which wrongfully withheld it.

—The Robert R. Kirkland, 153 Fed. 863.....83 C. C. A. 45

§ 2. Charters.

Where a dredge charter provided that the dredge should be able to deposit on shore an average of 300 cubic yards of material per hour, the owner merely warranted the dredge's capacity, and not that the dredge should in fact deposit that quantity of material.

—Bowers Hydraulic Dredging Co. v. Federal Contracting Co., 153 Fed. 870.....83 C. C. A. 52

Where a dredge charter provided that it should be used as the charterer or his agents might direct in dredging material and putting the same ashore on the meadows adjoining the Passaic and Hackensack rivers, or

Digitized by Google

at such other localities as the charterer might direct, the charter did not cover dredging material not ordinarily found in such operations, and for which such a dredge as that chartered by reason of its peculiar construction was not adapted.
—Bowers Hydraulic Dredging Co. v. Federal Contracting Co., 153 Fed. 870.....83 C. C. A. 52

In a libel for the hire of a dredge, evidence *held* insufficient to show that the dredge did not pump 300 yards of material per hour, according to its warranted capacity.
—Bowers Hydraulic Dredging Co. v. Federal Contracting Co., 153 Fed. 870.....83 C. C. A. 52

§ 3. Liabilities of vessels and owners in general.
Plaintiff, a stevedore engaged in unloading bags of sugar from the hold of a vessel, was injured by the falling of a sling caused by the breaking of the rope fall as the sling caught under the coamings of the between-decks hatch. The fall provided for use at such hatch was made of wire, but shortly before the injury the stevedores not employed by the ship had substituted the rope fall in order to use the wire fall at another hatch. The rope was a four-inch one, and, if properly used and inspected, was fully capable of the work in hand. The ship had also provided an abundance of spare falls, both wire and rope, which were at the service of the stevedores whenever any fall indicated that a change was required, and the ship's officer, on noticing the change, asked concerning it, and the foreman replied that the wire fall was wanted elsewhere, and that the rope was quite good to lift anything they wanted to lift. *Held*, that the ship was not negligent nor responsible for the breaking of the rope.
—The St. Gothard, 153 Fed. 855.....83 C. C. A. 37

One of the respondents and another person were appointed joint agents to represent a number of parties who had joined in the purchase of the plant and vessels of a dredging company to be paid for in installments, with power to make the payments and receive and manage the property. The other respondent was a firm of which the first respondent was a member, and which was also one of the purchasers of the dredging property. *Held*, that the individual respondent had no power as agent to contract for the making of repairs by his firm on one of the vessels purchased and delivered to the agents, without the concurrence of his co-agent, and that the firm could not hold the vessel under a claimed lien for repairs so ordered by him.
—The Robert R. Kirkland, 153 Fed. 863.....83 C. C. A. 45

The contracts of a managing agent of a steamship company, within the sphere of his authority, are the actual contracts of the owner and not of the vessels to which they relate, as in case of contracts made by a master on a voyage or in foreign ports.
—Great Lakes Towing Co. v. Mill Transp. Co., 155 Fed. 11..... 83 C. C. A. 607

§ 4. Carriage of goods.
When the charterer of a vessel is the shipper of the cargo, a bill of lading given by the master operates merely as a receipt for the goods and a document of title, and never, as between the shipowner and charterer, affects the terms of the charter party.
—The Fri, 154 Fed. 333.....83 C. C. A. 205

When a charter party gives to the charterer the full capacity of the ship, the owner is not a common carrier, but a bailee to transport as a private carrier for hire, and a condition in such a contract, to which the Harter act (Act Feb. 13, 1893, c. 105, 27 Stat. 445 [U. S. Comp. St. 1901, p. 2947]) has no application, exempting the shipowner from liability on account of the carelessness of its employés, is not contrary to public policy.
—The Fri, 154 Fed. 333.....83 C. C. A. 205

It is the duty of a carrier of cargo which meets with disaster through the fault of the vessel to do what he can to minimize the damage, by

Digitized by Google

which he profits as well as the cargo owner, and he is not entitled to a deduction of expenses so incurred from the damages recoverable by the cargo owner by reason of his loss.

—Ralli v. New York & T. S. S. Co., 154 Fed. 286.....83 C. C. A. 290

Section 3 of the Harter act (Act Feb. 13, 1893, c. 105, 27 Stat. 445 [U. S. Comp. St. 1901, p. 2946]), which exempts the owner of any vessel transporting property from liability for loss or damage thereto resulting from faults or errors in navigation, or in the management of the vessel, if he has exercised due diligence to make such vessel in all respects seaworthy and properly manned, equipped, and supplied, applies only to a vessel after the voyage has commenced, and cannot be invoked by an owner to relieve him from liability for loss of cargo through the careening and sinking of a vessel at the pier before she was fully loaded, due to the negligence of a watchman in failing to adjust her lines to permit her to drop with the tide.

—Ralli v. New York & T. S. S. Co., 154 Fed. 286.....83 C. C. A. 290

In construing and giving effect to the provisions of a bill of lading, the conditions and circumstances which the evidence proves were known to the parties and contemplated by them in making it are to be taken into consideration.

—Pacific Coast Co. v. Yukon Independent Transp. Co., 155 Fed. 29.... 83 C. C. A. 625

A provision of bills of lading giving the vessel the right to "deviate" does not authorize her, after arriving at the port of delivery, to return to the port of shipment with the goods on board, and thence make a second voyage to the port of delivery, which is not a deviation, but an abandonment of the voyage so far as relates to such shipment.

—Pacific Coast Co. v. Yukon Independent Transp. Co., 155 Fed. 29.... 83 C. C. A. 625

A parol contract for the shipment of goods, pursuant to which they were laden on board, may be shown to affect the construction of bills of lading signed and delivered after the goods were loaded and when the vessel was about to sail, and, in order that provisions of such bills shall override the prior agreement, the burden rests on the carrier to show that they were called to the attention of the shipper and assented to by him.

—Pacific Coast Co. v. Yukon Independent Transp. Co., 155 Fed. 29.... 83 C. C. A. 625

Libelant contracted with respondent for the carriage of goods from Seattle to St. Michaels, Alaska. It was fully understood that libelant intended to market the goods along the Yukon river as soon as the ice went out, and that it had a vessel awaiting at St. Michaels for the purpose. It was agreed that the goods should be taken on the first trip of respondent's vessel north, and should be delivered as soon as the ice was out of the harbor at St. Michaels, which was known to be usually about the 1st of July. Libelant refused to ship without such agreement. The bills of lading, which were issued after the cargo was on board, provided that in case the vessel should be prevented by stress of weather or otherwise from entering the port of delivery, the carrier might convey the property to the nearest or other port, and thence return it to the port of delivery by the same or other vessel, subject to the contract for the original voyage and at the risk of the owner. The vessel reached St. Michaels June 20th, and, finding the harbor filled with ice, returned to Nome, and there tendered delivery at ship's tackle, which being refused she returned to Seattle, and delivered the goods at St. Michaels on her next trip on July 19th. The ice went out of the harbor about July 1st. *Held*, that the vessel was bound by the contract of affreightment to wait until the ice went out or to transship the goods at Nome to be delivered at St. Michaels as soon as the harbor was free, at her own

Digitized by Google

expense, and that she was liable for the damages caused by her breach of contract.
—Pacific Coast Co. v. Yukon Independent Transp. Co., 155 Fed. 29.... 83 C. C. A. 625

Provisions of bills of lading requiring claims for loss or damage to cargo to be presented to the carrier within a stated time, and barring any suit for such loss or damage unless commenced within a further stated time, will be enforced by the courts only so far as they are reasonable under the circumstances of the particular case, and such requirements may also be waived by the carrier by his conduct.
—Pacific Coast Co. v. Yukon Independent Transp. Co., 155 Fed. 29.... 83 C. C. A. 625

Libelant shipped cargo on respondent's vessel from Seattle to St. Michaels, Alaska, under a clear verbal agreement that it should be delivered on the first trip of the vessel in the spring, or as soon as the ice was out of the harbor. When the vessel arrived the harbor was still closed by ice, and the vessel, after tendering delivery at Nome, returned to Seattle with the cargo on board, and delivered it on the next voyage. The bills of lading provided that all claims for damages should be presented to the carrier within 10 days from notice thereof, and that no action should be brought after 60 days. When the vessel decided to return from Nome with the property on board, libelant's agent served notice that a claim would be made for such damages as might result, and, when the goods were finally delivered at St. Michaels, served as specific a claim for damages as could then be made, and a more specific claim was later presented in Seattle, which respondent took under consideration, and negotiations for settlement were continued for a year before suit was brought. *Held*, that libelant had made reasonable compliance with the terms of the bills of lading as to notice, and that the delay in bringing suit was waived by the carrier by entertaining the claim and continuing negotiations for its settlement.
—Pacific Coast Co. v. Yukon Independent Transp. Co., 155 Fed. 29.... 83 C. C. A. 625

In such case provisions of the bills of lading that the carrier should not be required to deliver at any particular time or to meet any particular market, and limiting its liability for damage to cargo, were applicable only to the original voyage, and it lost the benefit of them when it deliberately abandoned such voyage.
—Pacific Coast Co. v. Yukon Independent Transp. Co., 155 Fed. 29.... 83 C. C. A. 625

§ 5. Limitation of owner's liability.

Where a lighter sank at a pier while being loaded, injuring a large part of her cargo, the fact that the uninjured cargo was then transferred by her owner to another vessel, and that such lighter did not deliver any part of it, does not relieve the owner in proceedings for limitation of his liability from the necessity of surrendering as "pending freight" the freight which she would have earned if she had carried the cargo.
—Ralli v. New York & T. S. S. Co., 154 Fed. 286.....83 C. C. A. 290

Under Rev. St. § 4283 [U. S. Comp. St. 1901, p. 2943], which provides that the liability of the owner of a vessel for loss or damage to cargo occurring without his privity or knowledge "shall in no case exceed the amount or value of the interest of such owner in such vessel and her freight then pending," pending freight is limited to that due to or to be earned by the particular vessel through whose fault the loss occurred, and the fact that goods when lost or injured were being transported under through bills of lading upon different vessels of the same owner does not require a surrender of the freight earned by a different vessel in the course of such shipment.
—Ralli v. New York & T. S. S. Co., 154 Fed. 286.....83 C. C. A. 290

A traveling steam hoist or derrick, mounted upon a fuel scow specially designed to be used with such a hoist, and from which, although remova-

Digitized by Google

able, it had been removed but once in 14 years, is a part of the vessel, within the meaning of the limitation of liability statute (Rev. St. § 4283 [U. S. Comp. St. 1901, p. 2943]).

—The Buffalo, 154 Fed. 815.....83 C. C. A. 531

Section 18 of Act June 26, 1884 (23 Stat. 57, c. 121 [U. S. Comp. St. 1901, p. 2945]), which provides that "the individual liability of a shipowner shall be limited to the proportion of any or all debts and liabilities that his individual share of the vessel bears to the whole; and the aggregate liabilities of all the owners of a vessel on account of the same shall not exceed the value of such vessel and freight pending," and Rev. St. § 4283 [U. S. Comp. St. 1901, p. 2943], are in pari materia, and to be construed together. The provision of the older act by which the limitation of liability therein provided for is confined to things "done, occasioned or incurred without the privity of knowledge of such owner or owners," also qualifies the latter act, which was not intended to apply to liabilities of the owners of vessels for the consequences of their personal faults or upon obligations personally contracted by them.

—Great Lakes Towing Co. v. Mill Transp. Co., 155 Fed. 11.....
83 C. C. A. 607

A towing company entered into a contract with the managing agent of petitioner, which was the owner of certain vessels on the Great Lakes, by which it agreed to perform all towing and wrecking service required by such vessels during the season at certain stated prices. One of petitioner's vessels having stranded, the towing company was called on pursuant to said contract, and sent a tug with wrecking apparatus to the assistance of such vessel, where it spent several days in pumping and attempting to get her afloat, but unsuccessfully, and she was lost. *Held*, that section 18 of Act June 26, 1884 (23 Stat. 57, c. 121 [U. S. Comp. St. 1901, p. 2945]), did not entitle petitioner to a limitation of liability for the services so rendered by the towing company under its contract to the value of the salvage recovered from the wreck.

—Great Lakes Towing Co. v. Mill Transp. Co., 155 Fed. 11.....
83 C. C. A. 607

SIGNALS.

Of vessels, see "Collision," §§ 3, 7.

SLANDER.

See "Libel and Slander."

SLEEPING CARS.

See "Carriers," § 1.

SMUGGLING.

See "Customs Duties," § 5.

SPECIFIC PERFORMANCE.

§ 1. Nature and grounds of remedy in general.

A prior agreement of a defendant to convey a part of the property in controversy to a third person, who is not a party to the suit, is no defense to a suit for specific performance of a subsequent agreement to convey the same property, because the decree cannot bind or injuriously affect the rights or interests of the absent first contractor.

—Howe v. Howe & Owen Ball Bearing Co., 154 Fed. 820.....
83 C. C. A. 536

Digitized by Google

§ 2. **Contracts enforceable.**

Defendant, for an expressed consideration of $1, agreed to convey to complainant a one-fifth interest in any and all property which he should acquire either by location, purchase, or otherwise in the territory of Alaska. In his bill, complainant alleged that the real consideration for the agreement was the cancellation of an indebtedness due him from defendant and cash advanced, amounting in all to about $12,000; also that defendant had acquired certain property in Alaska, by location, purchase, and otherwise, exceeding in value $750,000; and prayed for a decree for specific performance. *Held* that, there being no limit in the contract as to the time or manner of acquisition of the property or as to its character or value, the contract was inequitable and would not be specifically enforced, especially in view of the gross inadequacy of the consideration as disclosed by the bill.

—Marks v. Gates, 154 Fed. 481.....83 C. C. A. 321

A contract may be perfectly legal, and yet a court of equity will not enforce specific performance if it is unreasonable or unconscientious or if its enforcement will work a hardship or injustice to one of the parties, but will leave the parties to their remedies at law.

—Marks v. Gates, 154 Fed. 481.....83 C. C. A. 321

It was no defense to a suit for the performance of an executory agreement of which an executed agreement was the consideration that a trustee to whom defendant was to convey certain stock had failed to render services to promote the corporation as agreed; his contract in that regard being incidental to the main purpose of the agreement, and not going to its whole consideration.

—Howe v. Howe & Owen Ball Bearing Co., 154 Fed. 820..... 83 C. C. A. 536

SPEED.

Of vessel in collision, see "Collision," § 3.

SPLITTING CAUSES OF ACTION.

See "Action," § 1.

STATES.

Adoption by United States courts of practice of state courts, see "Courts," § 3.
Courts, see "Courts."
State laws affecting patents, see "Patents," § 1.

STATUTES.

Adoption by United States courts of state laws as rules of decision, see "Courts," § 3.

Provisions relating to particular subjects.

See "Attorney and Client," § 1; "Bankruptcy," § 1; "Collision," §§ 1, 4; "Copyrights," § 1; "Corporations," §§ 3, 5; "Criminal Law," §§ 1, 2; "Customs Duties"; "Death," § 1; "Habeas Corpus," § 1; "Judicial Sales"; "Master and Servant," §§ 1, 2; "Monopolies," § 1; "Municipal Corporations," § 2; "Navigable Waters," § 1; "Patents," § 4; "Pleading," § 1; "Post Office," § 1; "Public Lands," § 1; "Railroads," § 2; "Shipping," §§ 4, 5; "Wills," § 1.
Statute of frauds, see "Frauds, Statute of."

Digitized by Google

STATUTES CONSTRUED.

UNITED STATES.

CONSTITUTION.

Amend. 14 564

STATUTES AT LARGE.

1879, March 3, ch. 183, 20 Stat. 415 [U. S. Comp. St. 1901, p. 591].... 253
1884, June 26, ch. 121, § 18, 23 Stat. 57 [U. S. Comp. St. 1901, p. 2945] 607, 608
1885, Feb. 25, ch. 149, § 1, 23 Stat. 321 [U. S. Comp. St. 1901, p. 1524] 245
1890, June 10, ch. 407, § 13, 26 Stat. 136 [U. S. Comp. 1901, p. 1932] 463
1890, June 10, ch. 407, § 15, 26 Stat. 138 [U. S. Comp. St. 1901, p. 1933] 145
1890, June 10, ch. 407, § 19, 26 Stat. 139 [U. S. Comp. St. 1901, p. 1925].....40, 463
1890, July 2, ch. 647, § 1, 26 Stat. 209 [U. S. Comp. St. 1901, p. 3200] 336, 343
1891, March 3, ch. 517, § 11, 26 Stat. 829 [U. S. Comp. St. 1901, p. 552] 550
1891, March 3, ch. 565, 26 Stat. 1110 [U. S. Comp. St. 1901, p. 3417] 576
1893, Feb. 13, ch. 105, 27 Stat. 445 [U. S. Comp. St. 1901, p. 2946] 206, 290
1895, Feb. 8, ch. 64, § 1, 28 Stat. 645 [U. S. Comp. St. 1901, p. 2891] 505
1897, July 24, ch. 11, § 1, Schedule E, par. 212, 30 Stat. 168 [U. S. Comp. St. 1901, p. 1647]..... 297
1897, July 24, ch. 11, § 1, Schedule G, pars. 263, 272, 30 Stat. 171, 172 [U. S. Comp. St. 1901, pp. 1651, 1652] 329
1897, July 24, ch. 11, § 1, Schedule L, par. 384, 30 Stat. 185 [U. S. Comp. St. 1901, p. 1668]..... 197
1897, July 24, ch. 11, § 1, Schedule L, par. 387, 30 Stat. 186 [U. S. Comp. St. 1901, p. 1669]..... 145
1897, July 24, ch. 11, § 1, Schedule L, par. 391, 30 Stat. 187 [U. S. Comp. St. 1901, p. 1670]..... 472
1897, July 24, ch. 11, § 1, Schedule M, par. 401, 30 Stat. 189 [U. S. Comp. St. 1901, p. 1672]..... 43
1897, July 24, ch. 11, § 1, Schedule N, par. 414, 30 Stat. 190 [U. S. Comp. St. 1901 p. 1674]..... 50
1897, July 24, ch. 11, § 2, Free List, par. 661, 30 Stat. 185 [U. S. Comp. St. 1901, p. 1688]..... 197
1897, July 24, ch. 11, § 7, 30 Stat. 205 [U. S. Comp. St. 1901, p. 1693] 151, 329
1898, July 1, ch. 541, 30 Stat. 544 [U. S. Comp. St. 1901, p. 3418].. 61
1898, July 1, ch. 541, § 2, 30 Stat. 546 [U. S. Comp. St. 1901, p. 3421] 304
1898, July 1, ch. 541, § 3a, subd. 3, 30 Stat. 546 [U. S. Comp. St. 1901, p. 3422]..... 486
1898, July 1, ch. 541, § 19a, 30 Stat. 551 [U. S. Comp. St. 1901, p. 3429] 119
1898, July 1, ch. 541, § 23b, 30 Stat. 552 [U. S. Comp. St. 1901, p. 3431]. Amended by Act 1903, Feb. 5, ch. 487, § 8, 32 Stat. 798 [U. S. Comp. St. Supp. 1905, p. 686] 61
1898, July 1, ch. 541, § 24b, 30 Stat. 553 [U. S. Comp. St. 1901, p. 3432] 304
1898, July 1, ch. 541, § 25a, 30 Stat. 553 [U. S. Comp. St. 1901, p. 3432] 266
1898, July 1, ch. 541, §§ 67c, 67d, 30 Stat. 564 [U. S. Comp. St. 1901, p. 3449]..... 121
1898, July 1, ch. 541, § 67f, 30 Stat. 565 [U. S. Comp. St. 1901, p. 3450].....121, 304
1898, July 1, ch. 541, § 70e, 30 Stat. 565 [U. S. Comp. St. 1901, p. 3452]. Amended by Act 1903, Feb. 5, ch. 487, § 16, 32 Stat. 800 [U. S. Comp. St. Supp. 1905, p. 690] 61
1899, March 3, ch. 425, § 15, 30 Stat. 1152 [U. S. Comp. St. 1901, p. 3543] 19, 48
1899, March 3, ch. 429, 30 Stat. 1253 634
1903, Feb. 5, ch. 487, §§ 8, 16, 32 Stat. 798, 800 [U. S. Comp. St. Supp. 1905, pp. 686, 690]..... 61
1904, April 28, ch. 1778, 33 Stat. 529 .....634, 644
1905, March 3, ch. 1479, § 12, 33 Stat. 1081 [U. S. Comp. St. Supp. 1905, p. 150]..... 392

REVISED STATUTES.

§ 251 [U. S. Comp. St. 1901, p. 138] 131
§ 649 [U. S. Comp. St. 1901, p. 525] 489
§ 716 [U. S. Comp. St. 1901, p. 580] 662
§§ 763, 764 [U. S. Comp. St. 1901, pp. 594, 595] 421
§ 829 [U. S. Comp. St. 1901, p. 636] 46
§§ 914–916 [U. S. Comp. St. 1901, p. 684] 662
§ 1024 [U. S. Comp. St. 1901, p. 720] 552
§ 2802 [U. S. Comp. St. 1901, p. 1873] 475
§ 4283 [U. S. Comp. St. 1901, p. 2943] 290, 532, 608
§ 4952 [U. S. Comp. St. 1901, p. 3406]. Amended by Act 1891, March 3, ch. 565, 26 Stat. 1110 [U. S. Comp. St. 1901, p. 3417].. 576

Digitized by Google

§ 5467 [U. S. Comp. St. 1901, p. 3691] 478
§ 5480 [U. S. Comp. St. 1901, p. 3696] 309, 317, 552

COMPILED STATUTES 1901.

Page 138 131
Page 525 489
Page 552 550
Page 580 662
Page 591 253
Pages 594, 595..... 421
Page 636 46
Page 684 662
Page 720 552
Page 1524 245
Page 1647 297
Pages 1651, 1652 329
Page 1668 197
Page 1669 145
Page 1670 472
Page 1672 43
Page 1674 50
Page 1688 197
Page 1693 .....151, 329
Page 1873 475
Page 1925 .....40, 463
Page 1932 463
Page 1933 145
Page 2891 505
Page 2943 .....290, 532, 608
Page 2945 .....607, 608
Page 2946 .....206, 290
Page 3200 .....?36, 343
Page 3406 576
Page 3417 576
Page 3418 61
Page 3421 304
Page 3422 486
Page 3429 119
Page 3431 61
Page 3432 .....266, 304
Page 3449 121
Page 3450 .....121, 309
Page 3452 61
Page 3543 .....19, 48
Page 3691 478
Page 3696 .....309, 317, 552

COMPILED STATUTES (SUPP.) 1905.

Page 150 392
Pages 686, 690..... 61

ALASKA.

CODE OF CIVIL PROCEDURE.

§ 93 597
§ 504 597

PENAL CODE.

§ 128 646
§§ 186, 188 634

COLORADO.

MILLS' ANNOTATED STATUTES.

§§ 1508–1510 284

ILLINOIS.

HURD'S REVISED STATUTES 1905.

Ch. 148, § 7..... 231

INDIAN TERRITORY.

MANSFIELD'S DIGEST.

§§ 1385, 1386..... 392

KANSAS.

GENERAL STATUTES 1901.

§§ 3012–3014 252

KENTUCKY.

STATUTES 1903.

§ 496 266

MISSOURI.

ANNOTATED STATUTES 1906.

§ 746 432
§ 3705 415

REVISED STATUTES 1899.

§ 746 [Ann. St. 1906, p. 731]..... 432
§ 3705 [Ann. St. 1906, p. 2073].... 415

NEW YORK.

CODE OF CIVIL PROCEDURE.

§ 66 .....106, 124

LAWS.

1892, p. 1491, ch. 677, § 28..... 92
1902, p. 1748, ch. 600..... 510

NORTH DAKOTA.

REVISED CODE 1899.

§ 2172 554

OHIO.

LAWS.

1890, p. 150..... 564

PENNSYLVANIA.

LAWS.

1842, p. 339..... 474
1874, p. 108..... 501

TENNESSEE.

SHANNON'S CODE.

§ 1574, subsec. 4..... 590

VIRGINIA.

CODE 1904.

§ 1296a 91

Digitized by Google

STOCK.

Corporate stock, see "Corporations," § 1.

STOCKHOLDERS.

Of corporations, see "Corporations," §§ 1, 2, 4.

STREET RAILROADS.

See "Railroads."
Carriage of passengers, see "Carriers."

STREETS.

See "Municipal Corporations," § 2.

SUA SPONTE.

Errors noted on appeal or error without assignment, see "Appeal and Error," § 6.

SUIT.

See "Action."

TARIFF.

See "Customs Duties."

TAXATION.

See "Customs Duties."

TERRITORIES.

Territorial courts, see "Courts," § 3.

TESTAMENT.

See "Wills."

TIME.

Computation of under insurance policy, see "Insurance," § 1.
For filing petition to revise in bankruptcy proceedings, see "Bankruptcy," § 4.
For payment of interest, see "Interest," § 1.
For taking appeal or suing out writ of error, see "Appeal and Error," § 4.
For vacation of judgment, see "Judgment," § 1.

TITLE.

Effect of sale, see "Sales."
To patents, see "Patents," § 4.
To vessel, see "Shipping," § 1.

Digitized by Google

TORTS.

Causing death, see "Death," § 1.

Liabilities of particular classes of persons.

See "Municipal Corporations," § 2.

Particular torts.

See "Libel and Slander"; "Negligence"; "Trover and Conversion."
Maritime torts, see "Collision."

Remedies for torts.

Measure of damages, see "Damages," § 1.

TOWAGE.

Collisions with tugs and vessels in tow, see "Collision," § 3.

Evidence *held* to support the finding of the trial court that the leaking of a barge in tow which made it necessary to abandon her did not result from her grounding through the fault of the tug, but that it was due to her unseaworthy condition; and the tug also *held* not in fault for not sooner going in search of the barge after her crew had been taken off and she had gone adrift at sea in the night, in view of the belief of all parties that she had foundered.
—The Asher J. Hudson, 154 Fed. 354.....83 C. C. A. 143

TOWNS.

See "Municipal Corporations."

TRADE-MARKS AND TRADE-NAMES.

§ 1. Infringement and unfair competition.
A manufacturer of locks who deliberately and intentionally copied a higher-priced lock made by another manufacturer in form, size, coloring, lettering, and details of finish, so that the two were substantially identical in appearance to a casual observer, and retail purchasers were likely to mistake one for the other, is chargeable with unfair competition, although the parts of the lock separately may have been open to his appropriation.
—Yale & Towne Mfg. Co. v. Alder, 154 Fed. 37.....83 C. C. A. 149

TRIAL.

Presumptions on appeal or writ of error as to rulings, see "Appeal and Error," § 8.
Waiver of errors in rulings by failure to except in trial court, see "Appeal and Error," § 3.

Trial of actions by or against particular classes of persons.

See "Municipal Corporations," § 2.

Trial of particular civil actions or proceedings.

See "Negligence," § 1.
For causing death in general, see "Death," § 1.
For death of servant, see "Master and Servant," § 2.

Digitized by Google

For personal injuries, see "Master and Servant," § 2; "Municipal Corporations," § 2; "Railroads," § 2.
On insurance policy, see "Insurance," § 8.

Trial of criminal prosecutions.

See "Assault and Battery," § 1; "Criminal Law," § 4.
For offense against land laws, see "Public Lands," § 1.
For offense against postal laws, see "Post Office," § 1.

§ 1. **Taking case or question from jury.**
While questions of negligence are ordinarily for the jury in federal courts, a case may be withdrawn from the jury and a verdict directed for plaintiff or defendant, as may be proper, where there is no conflict in the evidence, or where it is so conclusive in its character that the court, in the exercise of its sound judicial discretion, would be obliged to set aside a verdict rendered in opposition to such evidence.
—Russell v. Oregon Short Line R. Co., 155 Fed. 22..83 C. C. A. 618

Under the rule of the federal courts, a court should direct a verdict where the evidence produced by the party on whom rests the burden of proof is insufficient to sustain a verdict in his favor.
—National Ass'n of Ry. Postal Clerks v. Scott, 155 Fed. 92..... 83 C. C. A. 652

§ 2. **Verdict.**
A general verdict for the plaintiff in an action against a city to recover for an injury received by plaintiff by falling over an obstruction in a street, returned under instructions which authorized such verdict if the jury should find that the obstruction had been there for such length of time that the city in the exercise of reasonable care should have known of it, is not inconsistent with the answer to a special interrogatory stating that the jury were unable to find the length of time the obstruction had been there, where the evidence tended to show that it had been there for a number of days, but left the exact length of time uncertain.
—City of Grand Forks v. Allman, 153 Fed. 532.....83 C. C. A. 554

§ 3. **Waiver and correction of irregularities and errors.**
A motion for a directed verdict at the conclusion of plaintiff's case in chief is waived by defendant's introduction of evidence in its own behalf.
—Fidelity & Casualty Co. of New York v. Thompson, 154 Fed. 484 83 C. C. A. 324

TROVER AND CONVERSION.

§ 1. **Acts constituting conversion and liability therefor.**
Where certain wool growers, having sold and delivered a quantity of wool, resold it to a bank, which brought replevin against the original buyer's agent and the railroad company in possession, and, after delivery of the wool by the sheriff to the bank, it shipped and sold the wool to a purchaser, who so appropriated and changed it as to destroy its identity, the original buyer was not bound to intervene in the replevin suit, but was entitled to maintain conversion against the bank.
—Northwestern State Bank of Hay Springs, Neb., v. Silberman, 154 Fed. 809.....83 C. C. A. 525

TRUSTS.

Combinations to monopolize trade, see "Monopolies," § 1.
Right to relief in equity for failure to execute trust as dependent on adequacy of remedy at law, see "Equity," § 1.
Secret trusts, see "Fraudulent Conveyances," § 1.
Splitting cause of action for enforcement of, see "Action," § 1.
Trust deeds, see "Chattel Mortgages."

Digitized by Google

§ 1. Creation, existence, and validity.

The bill set forth these facts: B. and M. agreed that B. should procure options to purchase certain mining claims in M.'s name; that they should organize a corporation with 500,000 shares of stock; that this stock should be issued to M., who should place 300,000 shares of it in the treasury of the corporation, transfer 50,000 shares to B., convey the options to the corporation, and furnish the money, either by loans to the corporation or by purchase of the capital stock, to pay the unpaid balances of the purchase prices of the mining claims. B. procured the options. The corporation, the P. Co., was organized. M. conveyed the options to it, took the 500,000 shares of stock, and placed 300,000 shares in the treasury. The P. Co. paid the unpaid balances of the purchase prices of the mining claims, and M. took the deeds thereof to himself. The complainants were the assigns of 11,300 of the 50,000 shares of stock M. agreed to transfer to B., and they brought suit in equity against M. and the P. Co. to compel him to convey the mining claims to the corporation. *Held:* (1) The bill stated a good cause of action in equity to enforce specific performance of a contract relating to real estate and to compel the execution of the trust created by the agreement and by the complete performance of it on the part of B.

—Rogers v. Penobscot Min. Co., 154 Fed. 606.....83 C. C. A. 380

In equity, vendors of real estate and those claiming under them hold their titles in trust for their vendees.

—Rogers v. Penobscot Min. Co., 154 Fed. 606.....83 C. C. A. 380

Some betrayal of confidence or breach of duty is indispensable to the avoidance of titles or rights acquired of his correlate by one in a fiduciary relation.

—Howe v. Howe & Owen Ball Bearing Co., 154 Fed. 820..... 83 C. C. A. 536

TUGS.

See "Towage."

UNDISCLOSED AGENCY.

See "Principal and Agent," § 1.

UNFAIR COMPETITION.

See "Trade-Marks and Trade-Names," § 1.

UNITED STATES.

See "Copyrights," § 1; "Customs Duties"; "Post Office."
Courts, see "Courts," § 3; "Removal of Causes."
Exercise of power of eminent domain, see "Eminent Domain," § 1.
Indians, see "Indians."

USAGES.

See "Customs and Usages."

VACATION.

Of judgment, see "Judgment," § 1.
Of judicial sale, see "Judicial Sales."

Digitized by Google

VALUE.

Limits of jurisdiction, see "Courts," § 3.

VARIANCE.

Between pleading and proof in civil action, see "Pleading," § 2.

VENDOR AND PURCHASER.

See "Sales."
Right to equitable relief on breach of contract for sale of realty as dependent on adequacy of remedy at law, see "Equity," § 1.
Specific performance of contract, see "Specific Performance."
Vendors as trustees for vendees, see "Trusts," § 1.

§ 1. Remedies of vendor.

Complainant sold certain mining property, reserving a vendor's lien. Some two years later an agreement was made between complainant, the purchaser, and a third party, whereby the latter, which held a claim against a stockholder of complainant, was to receive payment in installments from the net proceeds of the mining property, the operation of which was placed in the hands of a board of five managers. The third party, in accordance with the agreement, released its claim against the stockholder. *Held*, that to a suit by complainants against the purchaser and such third party to foreclose its vendor's lien the managers were not indispensable parties, being merely the agents of the parties before the court.

—Golden Cross Min. & Mill. Co. v. Free Gold Min. Co., 154 Fed. 441 83 C. C. A. 355

VENUE.

§ 1. Domicile or residence of parties.

The right of a defendant, sued in a federal court on the ground of diversity of citizenship, to object to the jurisdiction of the court because neither party is a resident of the district, is waived by his entering a general appearance and asking for an extension of time in which to plead and for a continuance, prior to the making of such objection.

—Midland Contracting Co. v. Toledo Foundry & Machine Co., 154 Fed. 797 .....83 C. C. A. 489

VERDICT.

Directing verdict in civil actions, see "Trial," § 1.
In civil actions, see "Trial," § 2.
Review on appeal or writ of error, see "Appeal and Error," § 8.

VERIFICATION.

Of pleading, see "Pleading," § 1.

VESTED REMAINDERS.

Creation, see "Wills," § 2.

Digitized by Google

VICE PRINCIPALS.

See "Master and Servant," § 1.

VILLAGES.

See "Municipal Corporations."

VOIR DIRE.

See "Jury," § 1.

WAGERS.

See "Gaming," § 1.

WAIVER.

Of objections to particular acts, instruments, or proceedings.

See "Appearance"; "Trial," § 3.
Error waived by failure to except in trial court, see "Appeal and Error," § 3.
Objection to venue, see "Venue." § 1.

Of rights or remedies.

Condition in contract, see "Contracts," § 2.
Payment of purchase price of goods in cash, see "Sales," § 1.
Right to forfeit insurance policy, see "Insurance," § 5.

WAREHOUSEMEN.

Warehouses for imported goods, see "Customs Duties," § 3.

WARNING.

To servant, see "Master and Servant," § 1.

WARRANTY.

On sale of goods, see "Sales," § 2.

WATERS AND WATER COURSES.

See "Navigable Waters."

WAYS.

Public ways, see "Municipal Corporations," § 2.

WELLS.

Mingling gas from gas wells, see "Confusion of Goods," § 1.

Digitized by Google

WILLS.

Construction and execution of trusts, see "Trusts."
Devise to bankrupt as asset of his estate, see "Bankruptcy," § 3.

§ 1. Probate, establishment, and annulment.

Where a foreign will, devising both real and personal property in Illinois, was admitted to probate, one of the heirs of testator's estate was entitled to contest the same in the manner and within the time specified by the Illinois wills act (Hurd's Rev. St. 1905, c. 148, § 7), regulating will contests, though it was only claimed that the will was void, in so far as it attempted to pass personal property, because of a failure to execute it in a manner prescribed by the laws of testatrix's domicile at the time it was executed, so that, no contest having been made within such time, the decree admitting the will to probate was a conclusive adjudication of its validity.

—Palmer v. Bradley, 154 Fed. 311.....83 C. C. A. 231

§ 2. Construction.

Where a testator devised and bequeathed his residuary estate to his widow for life or until her remarriage, with remainder to his son and daughter in equal shares, the latter took at once a vested interest in remainder in the real estate which was alienable under the laws of Minnesota.

—Perkins v. Gibbs, 153 Fed. 952.....83 C. C. A. 68

§ 3. Rights and liabilities of devisees and legatees.

A testator devised and bequeathed his estate in equal shares to his son and daughter, subject to a life interest in his widow terminable on her remarriage. All of such parties entered into a written agreement admittedly made in good faith for an amicable division of the estate, by which the widow and son, who were also executors, agreed to convey their interest in certain real estate to the daughter, and she was to convey her interest in other real estate to the son, and also to release her claim to any share of an indebtedness owing by him to the estate and to money which he had misapplied as executor. Later, when the son had become largely indebted and insolvent, he and the widow executed the conveyance to the daughter; the deed reciting that it was made in consideration and compliance with such agreement. The son obtained the property which he was to have by the agreement, and was not called upon to pay the amount which he owed the estate. *Held*, that the conveyance to the daughter was based on a good and meritorious consideration; also, on the evidence, that it was made as recited therein in good faith pursuant to the prior agreement, and not for the purpose of defrauding the son's creditors, as charged in a creditors' bill.

—Perkins v. Gibbs, 153 Fed. 952.....83 C. C. A. 68

WITNESSES.

See "Evidence."
Experts, see "Evidence," § 3.
Opinions, see "Evidence," § 3.

WRITS.

Particular writs.

See "Habeas Corpus"; "Injunction"; "Replevin."
Writ of error, see "Appeal and Error."

[END OF VOLUME.]

E. J. C. A. 3/6/08.

Digitized by Google

Digitized by Google

Digitized by Google

Digitized by Google

Digitized by Google